Said it jocularly, my wish was always to find the chainsaw who allows me to extract hydrogen from pure water and to use oxyhydrogen as a cheap and effective source for everybody and every energy application.

Nun, in Anbetracht meiner 81zig Jahre habe ich mich entschlossen meine im Laufe der Jahrzehnte angesammelte persönliche

Enzyklopädie

insbesondere über Wasserstoff, Knallgas und neue Energiemöglichkeiten

jedermann kostenlos zu Verfügung zu stellen.

Ich bin nach wie vor der Meinung:

Nahezu ALLES WAS DENKBAR IST, IST mit einiger Kreativität und Anstrengung auch MACHBAR

Ich bin der Meinung, die kreative Querschnittlähmung unserer zum Teil im Elfenbeinturm lebenden Universitäten sollte so schnell wie möglich beendet werden. So mancher etablierte physikalischer- und chemischer Grundsatz sollte einer erneuten Betrachtung unterzogen werden. Der Kopf, auch von Wissenschaftler, ist deshalb rund damit das etablierte eingefahrene Denken sich auch in Richtung Quer-Denken, verändern kann.

Generell bin ich der Ansicht, daß die konventionelle Wissenschaft und Technik einerseits sehr wohl zur Lösung des bestehenden Energieproblems beitragen könnte, aber andererseits auch nicht zum geringen Teil das Problem selbst darstellt. Sie glauben zu wissen was möglich und unmöglich ist, aber die Damen und Herren Experten vergessen das diese ihre Annahme auf den Wissensstand zur Zeit ihrer Ausbildung und/oder ihrer beruflichen Konsolidierung beruht. Aber auch der Gedanke: „von welchen Brot ich esse, dessen Lied ich singe“ ist oftmals tonangebend.

Sicher ist, die Mehrheit der Wissenschaftler macht ihr Angebot im guten Glauben einen signifikanten Beitrag zu Problemlösung beizusteuern, aber oftmals ist das Problem ihrer Dienstherren „im Geschäft“ zu bleiben schlechthin die Verhinderung für unkonventionelles wirklich neues wissenschaftliches Denken.

Ich habe versucht hier Denkanstöße zu geben und man sollte niemals „NIE“ sagen denn zuweilen gelingt es auch einem NIEMAND ein „NIE“ in ein **„aber es geht doch“** umzuwandeln.

Geben Sie sich selbst und den Rest der Menschheit eine Chance, nutzen Sie Ihren Geist, Ihre Fähigkeiten, werden Sie unabhängig, lösen Sie sich von der Masse der Unfähigen, werden Sie frei, zumindest in Ihren Gedanken. Ich bitte Sie darum.

INHALTSVERZEICHNIS

A brief history of the suppression of clean energy technologies

1.1.1.0 Energy Suppression

Time magazine (Australia) 17 July 1995 (p.46) are rounding up the future technologies that are going to severely change the world as we know it. They correctly point out that a change in the usage of energy would have a massive impact, but then promise "The first company to design an affordable car that doesn't foul the atmosphere will race past it's competitors." Not only are they totally wrong, but they're probably lying. The simple fact is the technology has been with us for most of this past century, it's just that it wouldn't be economically rational (for the oil companies) to allow the public to utilise it to be the spark of determination to send me on a investigative way.

The book **“**SUPPRESSED INVENTIONS AND OTHER DISCOVERIES” by Brian O'Leary, Christopher Bird, Jeane Manning, and Barry Lynes, Auckland Institute of Technology Press, Private bag 92006, Auckland, New Zealand. ISBN No 0-9583334-7-5. was only a short time on the public market.

Somebody (who probably?) has taken all copies from the market and now it is a very rare and hard to find the book, may be in the one and other second-hand bookshop you could be successfully.

1.1.1.2. Hydrogen Power

Yull Brown - from Sydney Australia developed a method of extracting hydrogen from water in 1978 and utilising it as a car fuel and fuel for welders. After much publicity (see The Bulletin (Aust) Aug 22, 1989) he had managed to raise over 2 million dollars but has failed to fully develop his invention.

Francisco Pacheco - an inventor from Bolivia created the "Pacheco Bi-Polar Autoelectric Hydrogen Generator" (US PAT # 5,089,107) which separates hydrogen from seawater.
He has built successful prototypes that have fueled a car, a motorcycle, a lawn mower, a torch, a boat, and most recently in 1990 he energised an entire home in West Milford. After many conferences (including U.N.) and public exhibitions proving the inventions worth, the wider community is still unable to utilise this technology.

Edward Estevel –from Spain developed a classic 'water to auto engine' system in the late 1960's extracting the hydrogen out of water to use as fuel. This system was highly heralded, then sank among other such 'high hope' hydrogen systems amid rumours of foul play.
Sam Leach - of Los Angeles developed a revolutionary hydrogen extraction process during the mid seventies. The unit easily extracted free hydrogen from water and was small enough to fit under the hood of automobiles. In 1976 two independent labs in LA tested this generator with perfect results. Mr. M.J. Mirkin who began the Budget car rental system purchased the rights to the device from the inventor who was said to be very concerned about his personal security.

Rodger Billings - of Provo, Utah headed a group of inventors that developed a system converting ordinary cars to run on Hydrogen. Instead of using heavy hydrogen tanks, he used metal alloys called Hydrides, to store vast amounts of hydrogen. When hot exhaust gases passed through these Hydride containers it released the gas to burn in the standard engines. Billings estimated the conversion would cost around US$ 500 and greatly improve fuel consumption.

Archie Blue - an inventor from Christchurch, New Zealand developed a car that runs purely on water by the extraction of hydrogen. An alleged offer of 500 million dollars from "Arab interests" was not enough to convince him to sell but never-the-less he has been unable to take his engine to the marketplace.

1.1.1.2 Electric Engines

Wayne Henthron - from Los Angeles built an "Electromatic Auto" in 1976 that managed to regenerate its own electricity. In normal stop and go driving it gave several hundred miles of service between recharges. The system worked by the wiring of the batteries to act as capacitors once the car was moving along with four standard auto alternators acting to keep the batteries charged. With little official interest in his system the inventor resolved to make the car available to the public to do so, is now involved with the World Federation of Science and Engineering - 15532 Computer Lane, Huntington Beach, CA, 92649.

Joseph R. Zubris - developed in 1969 an electric car circuit design (US PAT # 3,809,978) that he estimated cost him $100 a year to operate. Using an old ten horse electric truck motor, he worked out a unique system to get peak performance from his old 1961 Mercury engine that he ran from this power plant. The device actually cut energy drain on electric car starting by 75%, and by weakening excitation after getting started, produced a 100% mileage gain over conventional electric motors. The inventor was shocked to find the lack of reaction from larger business interests, and so in the early seventies began selling licenses to interested smaller concerns for $500. Last known address was Zubris Electrical Company, 1320 Dorchester Ave, Boston, Ma, 02122.

Richard Diggs - developed at an inventors workshop (I.W. international) his "Liquid Electricity Engine" that he believed could power a large truck for 25,000 miles from a single portable unit of his electrical fuel. Liquid electricity violated a number of the well known physical laws that the inventor pointed out. The inventor was also aware of the profound impact the invention could have upon the world's economy - if it could be developed.

B. Von Platen - a 65 year old Swedish inventor made a major breakthrough in the field of Thermo-electric engines with his "Hot and Cold Engine" - based on the fact that wires of different metals produce electricity if they are joined and heated, the inventors secret breakthrough is said to give more than 30% more efficiency than regular motors, and with a radioactive isotope for power (hmmm?!) it could be completely free from fossil fuels. Volvo of Sweden bought the rights to this in 1975.

1.1.1.3. Steam Engines

Oliver Yunick - developed a superefficient steam engine in 1970 (pop.Sci.Dec.1970) able to compete admirably with combustion engines.

DuPont Laboratories - built one of the most advanced steam engines in late 1971 using a recyclable fluid of the Freon family. It is assumed to contain no need for an external condenser, valves, or tubes. (Pop. Sci. Jan1972)

William Bolon - from Rialto, California, developed an unusual steam engine design in 1971, that was said to get up to 50 miles to the gallon. The engine used only 17 moving parts and weighed less than 50 pounds and eliminated the usual transmission and drive train in an automatic. After much publicity, the inventors factory was fire bombed with damages totalling $600,000 . Letters to the Whitehouse were ignored so the inventor finally gave up and let Indonesian interests have the design.

1.1.1.4. Air Power

Roy J. Meyers - from LA built an air powered car in 1931. (air has been used for years to power localised underground mine engines) Myers, an engineer, built a 114lb, 6 cylinder radial air engine that produced over 180 HP. Newspaper articles at the time reported that the vehicle could cruise several hundred miles at low speeds.

Vittorio Sorgato - of Milan, Italy also created a very impressive air powered vehicle in the 70's using compressed air stored as a liquid. After a great deal of initial interest from Italian sources his invention is now all but forgotten.

Robert Alexander - from Montebello, Ca. spent 45 days and around $500 to put together a car (US PAT #3913004) based on a small 7/8ths 12 v-motor that provided the initial power. Once going, a hydraulic and air system took over and recharged the small electric energy drain. The inventor and his partner were determined that the auto industry would not bury their "super power" system. To no avail.

Joseph P Troyan - designed an air powered flywheel that could propel an automobile for 2c a mile. Using a principle of "ratio amplification of motion" in a closed system, the Troyan motor (US PAT # 040011) was easily attached to electric generators for pollution-free variable power systems.

David McClintock - created his free energy device known as the "McClintock Air Motor" (US PAT # 2,982,26100) which is a cross between a diesel engine with three cylinders with a compression ratio of 27 to 1, and a rotary engine with solar and plenary gears. It burns no fuel, but becomes self-running by driving it's own air compressor.

1.1.1.5 Magnetic Energy

John W. Keeley - developed a car in the 1920's using principles similar to Nikola Tesla's, drawing harmonic magnetic energies from the planet itself. The electric car ran from high frequency electricity that was received when he simply broadcast the re-radiated atmospheric energy from a unit on his house roof. GM and the other Detroit oil "powers" offered the inventor 35 million dollars which was turned down when they would not guarantee to market the engine. Henry Ford - later bought and successfully shelved the invention.

Harold Adams - of Lake Isabella, California, worked out a motor thought to be similar to Keeley's. It was demonstrated for many persons, including Naval scientists around the late 1940's before it to "disappeared" from our history.

Dr Keith E. Kenyon - of Van Nuys, California discovered a discrepancy in long accepted laws relating to electric motor magnets, and so built a radically different motor that could theoretically run a car on a very small amount of electrical current. When demonstrated to physicists and engineers in 1976 those present admitted that it worked remarkably well but because it was beyond the 'accepted' laws of physics they chose to ignore it.

Bob Teal - of Madison, Florida was a retired electronics engineer when he invented his Magna-Pulsion Engine which ran by means of six tiny electromagnets and a secret timing device. Requiring no fuel, the engine emitted no gases. It was so simple in design it required very little maintenance and a small motorcycle battery was enough power to get it started. The engine has been met with little else but scepticism.

Lester J. Hendershot - built his Hendershot Generator in the late 1920's largely through trial and error. He wove together a number of flat coils of wire and placed stainless steel rings, sticks of carbon and permanent magnets in various positions as an experiment. To his surprise it actually produced current. The generator raised considerable attention at the time.

Howard Johnson - developed a motor thats power is generated purely by magnetism. It took six years of legal hassles to patent his design (US PAT #4,151,431) - more information is available from the "Permanent Magnet Research Institute" P.O. Box 199, Blacksburg, Virginia 24063. He is currently offering licensing rights.

Edwin V. Gray - developed in the early seventies an engine that uses no fuel and produces no waste, The engine that runs itself is U.S. Pat #3,890,548.

1.1.1.6 Petroleum Additives

Guido Franch - from Michigan U.S.A. began demonstrating in the mid seventies his "water-to-gas miracle" a fuel he created by adding to water a small quantity of "conversion powder" which was easily processed from coal. He claimed it could be processed for a few cents per gallon if mass produced. The fuel was tested by Chemists at Havoline Chemical of Michigan and the local University, and both concluded it worked more efficiently than gasoline. Franch continued to put on demonstrations for years but said the auto manufacturers, Government, and private companies just weren't interested in his revolutionary fuel.

Dr Alfred R. Globus - working for United International Research developed a Hydro-fuel mixture around the mid-seventies. The fuel was a mixture of 45% gasoline, 50% or more of water, and small percentages of United's "Hydrelate" which acted as a bonding agent. It was estimated that a hundred million gallons of fuel could be saved per day if this fuel were utilised but alas nobody seemed interested.

John Andrews - a Portuguese chemist who in 1974 developed a fuel additive that enabled ordinary gasoline to be mixed with water reducing fuel costs down to 2c a gallon. After successfully demonstrating the substance, impressed Navy officials when going to negotiate for the formula found the inventor missing and his lab ransacked.

Jean Chambrin - Water and Alcohol Motor – an engineer in Paris ran his private cars on a mixture of denatured alcohol and water. The inventor / mechanical engineer claimed his motor design could be mass produced at a fraction of the cost of present engines. He received nothing but publicity that led him to take great precautions in regard to his personnel security.

Mavrin D. Martin - from the University of Arizona developed in 1977 a "fuel reformer" catalytic reactor that was estimated to double mileage. The device was designed to cut exhaust emissions by mixing water with Hydro-carbon fuels to produce an efficient Hydrogen, Methane, Carbon-Monoxide fuel.

1.1.1.7. Improving Fuel Efficiciencny

Edward La Force - from Vermont U.S.A. designed with his brother Robert, a highly efficient engine that burnt all the usually wasted heavier gasoline molecules. The 'Los Angeles Examiner' (Dec. 29, 1974) reported that the cams, timing and so on were altered on stock Detroit engines. These modifications not only eliminated most of the pollution from the motor but by completely burning all the fuel, the mileage was usually doubled. After much publicity the US EPA examined the cars and found he motor designs were not good enough. Few people believed the EPA including a number of Senators who brought up the matter in a Congressional hearing in March 1975. The result was still silence.

Eric Cottell - was one of the pioneers of ultrasonic fuel systems. This involved using sonic transducers to 'vibrate' existing fuels down to much smaller particles, making it burn up to 20% more
efficiently. Cottell then went on to discover that super fine S-ionised water could be mixed perfectly with up to 70% oil or gas in these systems, this was followed by much publicity (e.g. Newsweek, June 17,1974) and then, once again - silence.

L. Mills. Beam - had his super-mileage carburetor bought out in the1920's. In the late 60's he worked out a catalytic vegetable compound that produced the same super mileage results. In principle it was nothing more than a method of using the hot exhaust gases of an engine to vaporise the liquid gas being burned. By rearranging the molecules of gas and diesel, he was able to triple mileage rates, while obtaining better combustion, mileage and emission control. He was refused and rejected by U.S. State and Federal Air Pollution and Environmental Pollution agencies and was finally forced to sell his formula abroad in the mid-seventies just to survive.

John W. Gulley - of Gratz Kentucky managed 115 mpg from his 8 cylinder Buick using a similar vaporising method as that employed by L.M. Beam. "Detroit interests" bought and suppressed the device in 1950.

SHELL research of London - produced a 'Vapipe' unit in the early seventies that also vaporized the petroleum at around 40 degrees centigrade, and used a sophisticated pressure loss reduction system, but alas was not marketed because it did not meet Federal emission standards.

Russell Bourke - designed an engine in 1932 with only two moving parts. He connected two pistons to a refined "Scotch Yoke" crankshaft and came up with an engine that was superior in most respects to any competitive engine. His design burned any cheap carbon based fuel and delivered great mileage and performance. Article after article was published acclaiming his engine but once again, to no avail. "The Bourke Engine Documentary" is the revealing book the inventor assembled just before his death.

1.1.1.8. New Fuels

Clayton J. Querles - from Lucerne Valley, California took a 10.000 mile trip across the country in his 1949 Buick on $10 worth of carbide by building a simple carbide generator which worked on the order of a miners lamp. He claimed that half a pound of acetylene pressure was sufficient to keep his car running, but because acetylene was dangerous, he put a safety valve on his generator and ran the outlet gas through water to ensure there would be no 'blow back'. The inventor also toyed successfully with methods of fuel vaporization. (see Sun-Telegram 11/2/74.)

Joseph Papp - built the highly regarded Papp engine in the 60's that could run on a 15 cents an hour secret combination of expandable gases. Instead of burning fuel, this engine used electricity to expand the gas in hermetically sealed cylinders. The first prototype was a simple ninety horsepower Volvo engine with upper end modifications. Attaching the Volvo pistons to pistons fitting the sealed cylinders, the engine worked perfectly with an output of three hundred horsepower. The inventor claimed it would cost about twenty five dollars to charge each cylinder every sixty thousand miles. The idea has gotten nowhere amid accusations of suppression by the media.

1.1.1.9. Better Carburetors

G.A. Moore. - one of the most productive inventors of carburetors, he held some 17,000 patents of which 250 were related to the automobile and it's carburetion. Industry today relies on his air brakes and fuel injection systems, it continues to completely ignore his systems for reducing pollution, gaining more mileage and improving overall engine efficiency. More info from "The Works of George Arlington Moore" published by the Madison Company. (see US PAT #'s 1,633,791 to 2,123,485 for 17 interesting developments.)

Joseph Bascle - created the Bascle carburetor in the mid 50's. The carburetor raised mileage by 25% and reduced pollution by 45%. It's inventor, a well known Baton Rouge researcher remodified every carburetor in the local Yellow Cab fleet, shortly after his arrival there.

Kendig Carburetors - were originally hand made for racing cars by a small group of mechanics in Los Angeles in the early seventies under the title of Variable Venture Carburetors. Eventually a young college student bought one of their less sophisticated prototypes for his old Mercury "gas hog", when he entered it in a Californian air pollution run - he won easily - not only did the carburetor reduce pollution, it gave almost twice the mileage. Within a week the student was told to remove the carburetor as it was not approved by the Air Resources Board. The simpler Kendig model was due for production in 1975 but has yet to be produced.

C.N. Pogue - from Winnipeg, Canada, developed a carburetor (US PAT#2,026,789) in the late 1930's that used superheated steam in it's system and managed at least 200 miles per gallon. Much local interest, including threats from professional thieves, was not enough publicity to see this invention through to the market place.

John R. Fish - developed his "Fish" carburetor in the early 1940's that was tested by Ford who admitted that the invention was a third more efficient than theirs. The design can also be easily switched to alcohol. Nevertheless, the inventor was hindered from manufacture and distribution in almost every possible way, he once even resorted to selling by mail order, only to be stopped by the Post Office. The device can be currently bought from "Fuel systems of America" Box 9333, Tarcoma, Washington 98401 - U.S.ph:(206) 922-2228. (US PAT's 2,214,273 and 2,236,595 and 2,775,818.)

The Dresserator - was created around the early 70's in Santa Ana, California by Lester Berriman. It was based on a super-accurate mixture control using greatly enhanced airflow, and could run a car on up to a 22-to-1 fuel mixture. Test cars passed the pollution control standards with ease and managed up to an 18% mileage gain. Although Holley Carburetor and Ford signed agreements to manufacture the design in 1974, nothing has been heard of since.

Mark J. Meierbachtol - from San Bernardino, California patented a carburetor (U.S. Patent # 3,432,281 March, 11, 69) that managed significantly greater mileage than was usual.

1.1.1.2. The Energy problem

It is in general known that energy is everywhere available, it is never lost, just transformed from one kind to another. But still we hear daily about energy problems and rising prices of the fossil fuels, electricity and heating. Why? Where does the problem come from?

One reason for the energy problem is the constantly increasing necessity for more and more energy - for the household life and the production sphere. We are living in a consuming society with constantly increasing needs.

Another reason for the energy problem is that our energy supply system is mainly based on using limited energy sources, such as petrol and other fossil fuels, as coal, gas, etc.

These energy sources are not only limited, but we are also using them in a destructive way. Some of the results of this are the ozone hole, waters- and air pollution.

But the main reason for the energy problem remains our lack of knowledge about the sources and causes of the energy and the good will to use them in a proper way. Nature is a fantastic example for us on how to solve the energy problem. We simply must copy it.

There are unlimited free energy sources available and we should learn how to work with them. Water is only one of them. But there are others as well, for example magnetism, ether, wind, sunshine, geothermic etc.
Regarding the newest discoveries of practical physics, quantum physics and free energy researches, we can find the solution in the claimed to be empty vacuum. The solution for the energy problems is the ether which is the source and cause of all the energies and which principle Nikola Tesla was able to use. He called this energy scalar energy.

Is it possible to have energy for free?

"I just want to clear my dreams of all that lies behind the truth of our extremes."

First of all, we should clear what is energy and if anybody is really able to produce energy. And what does is the meaning of free energy.

What is energy?

Energy is made from different vortex´ which also are called waves. There is an elementary vortex and a potentially vortex. The elementary vortex is an electromagnetic wave, and the potencial vortex is a standing longitudinal wave. The elementary vortex moves from the inside to the outside, is conducted by well conducting materials, like copper wires. The potencial vortex moves from the outside to the inside like a tornado, and is well conducted by dialectric materials, specially through vacuum and outer space. These two waves repel each other, and it also is claimed that the longitudinal wave is the cause of the electromagnetic wave.

That is the magic stuff, which keeps matter together.

Energy is antimatter and matter. Everything is made of energy. Actually, this gross matter which we see with our eyes is an illusory picture, which in truth does not exist in this way. We see it as hard and immovable matter. But the truth is, that it is made of molecules and atoms which all are in motion on different frequencies, and that there actually nothing is hard or fixed, or immovable. The difference between a picture on the TV screen and the matter which we can touch simply is the frequency and vibration. Both simply are vibrating images in vacuum, space, and times.

When we speak about energy, we should try to understand the cause and qualities of energy. Many questions are still un-answered. Our innovation has very much to do with these two described vortex´, and their transformation into mechanical energy.
The Maxwell theory very nicely explains this point. In the original Maxwell EM (Electro-magnetic) theory there also was included ether. In later interpretations this ether theory was removed because it was believed this only was a mathematical speculation of Maxwell. It seemed too mystical and useless.

But the practical physics and quantum physics of today prove that this was a mistake and it was not just mathematical speculation, but the ether really exists in the “empty” vacuum. The classical physics teach that the vacuum is empty. One of the most famous persons who proved that the vacuum is not empty is Nikola Tesla. He in his days spoke about scalar waves. Today quantum physics speak about particles named neutrinos - so called antimatter.

We can only transform energy from one kind to another. In this strict sense of the word “free energy” is not possible. Nothing is for free. The art is how to transform energy so it will be received for free. As already said, these different waves are so to say the glue, which keeps matter together, and these waves are the cause of energy. So, when these waves and vibrations are able to keep everything together, they also are able to decompose matter. This brought us to the idea to decompose water. By vibration even ether (the longitudinal wave), which is the cause for the electromagnetic wave, and which again is the cause that the water is kept together in its molecular structure, can be manipulated.

The sunrays in the photosynthesis split the water into hydrogen and oxygen inside the plants. In the same way we can mechanically do it, by manipulating the ether through resonance - vibration, which disturbs the electromagnetic wave in the water in such way, that the molecular basis of the water is decomposed.

With vibration it is possible to manipulate a big quantity of for free available energy (which we don’t have to pay for), and this energy then splits the water on the molecular level. If we now add up the energy quantity of water, ether and electricity, and calculate the output of the resulted transformed energy, then the output is less than the input. Maybe there is only 30% output efficiency, which seems to be useless, because we seem to have that little output. But the interesting thing about it is that it is for FREE, we do not have to pay for it, and we are able to recharge the source, for which we had to pay for.

At the point of view of the external observer we only have spent three Volts and two Amperes at the electrodes, which produced oxygen and hydrogen. From that produced gas we receive a flame of 2080 degrees Celsius for a time of two and a half hours from a 12 Volt battery with 2,8 Amperes. Externally it seems that we would have OVER-UNITY, that we would have received more energy than invested. Try to make a flame of 2080 degrees Celsius from a 12 Volt battery with 2,8 Amperes, and all this constantly for two and a half hours long. You will have great difficulty to boil water with this, not to speak about this 2080 degrees Celsius flame. But according to the law of conventional physics there cannot be more output then input. And this conventional physics is right. We received much less energy than invested, but still it was enough to recharge the battery and to use the energy for free, because the water and the ether are for free.

Our understanding of “free energy” is that we can receive energy for free in the sense of not paying for it. Energy cannot be lost or produced; it can only be transformed which means to also recharge what has been invested. Like this it is possible to have energy for free.
For example, there is a fuel engine, a battery, a container with water and connected to the engine a dynamo or alternator which is supposed to recharge the battery while running. To run this engine, we have energies for free (those we don’t have to pay for) - water and ether, which are available for free. With the energy from the battery we produce vibrations with which we can manipulate the ether and the ether is able to split the water to hydrogen and oxygen. These hydrogen and oxygen are burned in the engine to run it. By running the engine, the alternator is run, producing electricity to recharge the battery. After the battery has been recharged, we receive energy for free. The only visible input is water, which we can receive for free. And because we can recharge the battery by using the decomposed water, we have the energy for free. Although we have less output than input, we still have energy for free, because we don’t have to pay for it. Water and ether are for free and they are recharging the battery. In the same way we could recharge the battery using solar energy, which is also available for free. And again, and again we shall have less output than input, but who cares if the energy we receive in the end is for free. We could give many other examples with solar collectors, wind or water mills, Tesla’s ether receiver, engines running on magnetism.

The vortex physics of Prof. Dr.-Ing. Konstantin Meyl and Col. Tom Bearden’s theory on scalar energy bring a lot of light for us to understand this on physical platform.
http://www.k-meyl.de/de/

http://www.cheniere.org/index.html = Tom Beardens WEB site

I.) Teil Information über Wasserstoff und Knallgas

Jahrelangen Recherchen haben ergeben, daß zumindest folgende Personen (Institutionen), am Problem der „freien“ Energie, sei es mit Wasser > Knallgas, Magneten oder sonstwie, intensiv geforscht, gearbeitet und wenn man diese Geistesblitze studiert kommt man sehr schnell auf z. T. verdammt vernünftige Patente die da angemeldet aber praktisch nie kommerziell genutzt wurden.

Und es stellt sich die **Frage, WARUM eigentlich nicht?**

Es sind eine stattliche Anzahl von Personen und keinem dieser „Geistesblitzer“ ist der Durchbruch dahingehend gelungen, der Menschheit wirklich mehr oder weniger „freie“ Energie zu bescheren, waren all diese Gedanken in der Summe tatsächlich so unbrauchbar?

Tatsachen ist, über viele Forscher kann man über deren Wirken und ihre Patente im Internet nachlesen, aber es ist ungemein mühsam und zeitraubend sich die Infos zusammen zu suchen und sich so seine eigene Meinung zum Thema „freie“ Energie“ zu bilden.

Und über allem steht: Es soll so bleiben wie es heute ist, jedes Interesse an der Entwicklung neuer Energien ist von den heutigen industriellen und politischen Machthabern nahezu immer nur geheuchelt denn es würde ihre Macht erheblich beeinträchtigen und enorme Geldquellen, sowohl manche Konzerne als auch vieler Staatsregierungen, zum Verschwinden bringen.

Jede kleine Sparkassen-Bank weiß es, nur mit (Kredit-)Abhängigen läßt sich laufend und stetig Geld verdienen, warum soll dieses simple Prinzip nicht auch Erdöl- Erdgasindustriebosse und Regierungen wissen; stellen Sie sich einmal vor jeder Mensch nutzt „Freie Energie“, und er zahlt nichts mehr dafür?

So manches habe ich speziell dargestellt, alles darzustellen sprengt meine momentanen Möglichkeiten.

Tieferstehend finden Sie eine Zusammenstellung von Personen >Organisationen > Firmen die, aus meiner Sicht, zum Thema wirklich etwas zu sagen hatten und haben und die sich nicht in esoterischen Pimpamporium verloren:

INVENTOR	DEVICE
Adams, Harold	Engine (similar to that of Mr. Keely)
Adams, Robert (NZ)	Adams Motor

Alexander, Robert	Generator with free energy
Adsitt, Donald	Magnetic Ramp
Ames, Alan	Alcon Technologies Devices
Amman, C. Earl	Cosmo Electric Generator
Angus, Neil	Angus Engine
Anonyme, (F)	Receiver for extracting electricity from air
Aspden, Harold (U.K.)	Power from magnetism
	Vacuum spin
	Switched reluctance motor
Bailey, Patrick	Advanced fuel cell designs
Barret, Terrance	Tesla Non-Linear Shuttle Circuit
Baumann, Paul (CH)	Swiss ML Converter > Testatika
Bedini, John	Bedini Energy Converter
Billings, Rodger	Battery with hydrogen laser
Blasius-Grüter, Karl	Self-current gravitation torque converter
Blue, Archie	Apparatus with electrolysis
Bode, George, Fred	Motor utilizing electricity from air
Bolon, William	High performance vapor engine
Bowman, Lee	Engine of Peregrinus (reproduction)
Britt, Robert Gordon	Noble Gas Motors (AEROPS Engine)
Britten, Chauncey, J.	Radio extracting energy from air
Brown, Thomas T.	Parallel universe, antigravity
Brown, Yull	Brown’s Gas
Brown, Thomas Townsend	T.T. Brown Devices
Brunner, Ashton F.	Ocean Wave Generator
Buerger, Douglas	Spin Breeder Generator
Butikofer, Hermann (CH)	Calorific generator
Camus, Nelson	Turbo battery
Caro, Charles R.	E-Beam Discharge Power Converter
Carr, Otis	Carr Anti-Gravity Device
Chambrin, Jean (F)	Device - engine with water
Clem, Richard	Clem Over Unity Engine
Cobb, Melvin	Energy Conserver Circuit
Coler, Hans (D))	Magnetstromapparat
Coler, Hans (D))	Stromerzeuger
Cornish, François P.	Generator -. hydrogen and aluminium
Correa, Paulo et Alexandra	Autogenous Pulsed Glow Discharge
Cottel, Eric	Sonic transformer for fuel with water

Crump, Lloyd R.	Energy Extractor
Davis, Barry	Davis Tidal Turbine
De Rivas, Villasnor	Electromagnetic Generator
Deavenport, Larry	T.T. Brown Devices Replication
de Palma Bruce	N-Machine
Diggs, Richard	Engine with Liquid Electricity
Directo, R.F.	Field generator (CAOROP projects)
Dorman, Robert	L.I.A.G. Low Inertia Armature Generator
Dragone, Leon R.	Permanent Magnet Energy Conversion
Earle	Windmill Home generator
Ecklin, John V.	Ecklin Motor
Egel, Geoff (AUS)	Testatika (reproduction)
Estevel, Edward	Engine with hydrogen extracts
Fauble, James D.	Ion Source Beam Projector
Farnsworth/Trombly	Farnsworth/Trombly Energy Generator
Finsrud, Reidar (N)	Finsrud Motion machine
Fischer	WÄRMEMOTOR
Fox, Hal	Cold Fusion Results
Gary, Wesley W.	Gary’s Magnetic Motor (1879)
Geiger, Josef Otto, Hartmann & Ziegfeld	Rotary magnet Engine-generator
Graneau, Peter	Ampere-Neuman Electrodynamics
Gray, Edwin V.	Capacitive Discharge Motor
Griggs, James L.	Hydrosonic Pump
Grotz, Toby	Russell Optical Dynamo Generator
Gunnerman, Rudolph	A-55 carburant mix
Hammel, David	Generator antigravitation with free energy
James Hartman	
Hartmann, Stefan	PM Square Linear Magnet Motor
Hasselberger, Josef	
Hattaway, George (Canada)	Unipolar Dynamo
Hendershot, Lester	Hendershot Coil Device
Hickox, Barbara	Dynamo
Hooper, William	Motional Electric Field Effect
Hubbard, Alfred	Hubbard Coil Motor
Hubbard, Alfred	Hubbard Coil Research
Hull, Richard	Bobines Tesla Coil Builders of Richmond
Hutchinson, John	Crystal Energy Converter
Hyde, William	Hyde Device

Ide, Osamu	Capacitive Discharge Motor
Inomata, Shiuji (J)	N-Machine
Jamison, Lawrence	Energizer System
Jefimenko, Oleg	Electrostatic Free Energy Generator
Jensen, Paul Raymond	Series Resonant LC Circuit
Jensen, Paul Raymond	Unidirectional Transformer
Johnson, Howard	Permanent Magnet Motor
Kawai, Teruo	Kawai Motor
Keely, John E. W.	Keely Motor (Hydro - Vacuo Engine)
Kanarev, Ph. M.	Redefining physics > energy ramifications
Kenyon, Keith E.	Economic engine electric car
Kidd, Sandy	Kidd Device
Kieninger	N-Machine
Klemke, Erich E. (D)	Autonomous electric generator
Konzen, Doug	
Kromrey, Raymond	Kromrey Converter
Kunel (D)	Electromagnetic generator
Lambertson, Wingate	WIN Device
Leach, Sam Leslie	Generator separating hydrogen/oxygen
LeBreton, Robert P.	
Dennis Lee	
Leibowitz, Martin N.	MNL-DHE Generator
MacNeill, Ken	Proposed Hubbard Coil Motor
MacNeill, Ken	Reluctance Generator
Mallove, Eugene	Cold Fusion
Mark, Stephen	Stevens Generator
Markovitch, Peter	Apparatus to rectify Ether Energy
Marks, Alvin	Electric generator
May, Ed	Converter on Buick Wildcat
Mazzilli, Paolo	
McClain, Joel	Magnetic Resonance Amplifier (MRA)
McKie, Richard (Scott) et John	McKie Power on Demand Module
McClintock, David	Air engine
McKubre, Michael	SRI Experimental Research Results
Melnitchenko, Andrew A.	Effect projector of resonance
Merritt, Thomas D	Electrical Generator
Meyer, Stanley	Water Fuel Cell
Minato, Kohei	Minato Magnetic Motor

Moray, T. Henry	Moray Radiant Energy Equipment
Muller, William (Bill) J. F.	Muller Magnetic Motor
Mundt, Jurgen	Electric generator Transducer of Waste
Murray, Jim	Torque amplifier Gravitational apparatus
Myers, Roy J.	Apparatus collecting ambient electricity
Naudin, Jean-Louis (F)	Newman’s Machine (reproduction.)
Nègre, Guy (F)	Air engine
Newman, Joseph	Newman Energy Machine
Nichelson, Oliver	Dynamo Unipolar according to Tesla
O. Gerald	Ro-Mag Magnetic Generator
Pacheco, Francisco	Autoelectric Hydrogen Generator e
Pantone, Paul	Generating group Engine with plasma
Papp, Joseph	Gas Motors (Papp engine)
Papadopoulos, Konstantinos	Permanent magnet generator
Pappas, Panos	Energy from Electrical Discharges
Patterson, James	Patterson Power Cell
Paramahansa Tevari	
Perreault, Bruce A.	Radiant Energy Capture Device
Perrigo, Joeseph ou Harry	Magnet generator
Podkletnov, Eugene (Finland)	Podkletnov Device
Pond, Dale et Keely, John E. W.	Musical Dynasphere Globe Motor
Pons 6 Fleischman (France)	Pons and Fleischmann Status
Potter, David	Adams type Motor
Potter, Pual E.	
Prenninger, Johann	Testatika (reproduction)
Puthoff, Hal	Charge Cluster Technology (CCT)
Randell, Dr. L.	
Rauch, H.	Static Quantum Generator
Reed, Troy	Reed Magnetic Motor
Reich, Wilhelm	Orgone Energy Phenomena
Reich, Wilhelm	Reich Orgone Motor
Richardson, William H.	Aqua Fuel
Rodin, Marcos	Rodin Coil Research
Schaeffer, Bernhard	Converter of heat into mechanical energy
Schauberger, Victor	Schauberger Vortex Effects
Searl, John (U.K.))	Searl Generator > Levitation Device
Seike, Schinichi (J)	Landau Oscillator Seike
Serogodsky, Albert Victorovitch	Thermal instrument

Sinclaire, Pierre (Canada)	Gravity Magnetic Device
Sinclaire, Pierre (Canada)	Sinclaire Generator
Smith, Wilbert B.	Geomagnetic Generator
Smith, Wilbert B.	Magnetic Sink
Smith	Nuklear Decay Effects Experiments
Sorgato, Vittorio	Air-engine
Spence, Geoffrey M.	Energy Conversion System
Stephens, William	Stephens Motor
Stoneburg, William G.	Stoneburg Motor Generator
Storms, Edmund	Los Alamos Experimental Research Results
Sullivan, Steven	Omnificent Dynamo
Sweet, Floyd	Sweet Vacuum triode Amplifier (VTA)
Takahashi, Yasunori (J)	Takahashi Magnet Motor
Tate, John	Tate Ambient Power Module
Taylor, Robert	MRA Device S/N 95-3
Teal, Bob	Magnepulsion Motor
Tesla Engine Builders Association	Turbines Tesla (reproduction)
Tesla, Nikola	Non-Linear Shuttle Circuit
Tewari, Paramahansa (India)	N-Machine
Thermacore Co	Thermacore Cold fusion
Trombly, Adam et Kahn, Joseph	N-Machine (Trombly-Kahn)
Troyan, Joseph P.	Amplifying Troyan engine of movement
Turner, Brent	Tesla Techno. Research (reproduction)
Valone, Thomas	
Vilenkine, Alexander	Batterie ''Timetron'' Vilenkine
A. Violette, Paul A.	
Wanlass, Chris	Wanlass Motor-Generator
Ward, Sonne	N-Motor
Watson, Don	Watson VTA Device
Watson, Jim	Bedini charging of the batteries
Watson, Greg (AUS)	PMOD, RMOD, SMOT
Watson, Greg (AUS))	Rotary Magnetic Over-unity Device (
Wiseman, George	Free Energy Accumulator
Wiseman, George	Wiseman Energy Conserver Circuit
Wiseman, George	Low Temperature Electric Generator (LTPC)
Wysock, Bill	Tesla (reproduction)
Yglesias, José	Receiver for extracting Electricity from Air
Zaev, Nikolay	Non-Linear Capacitor electricity from ambient temp.

Znidarsic, Frank	Zero Point Technologies
Zubris, Joseph R.	Electric Circuit Reduced Energy Starting 75 %

2.1.1.0. Ist Wasser (H_2O) tatsächlich die zukünftige Energie Quelle?

Was wissen wir nicht alles über Dich, Du nasses, wildes Element. Wir wissen, daß Du 72% der Erdoberfläche bedeckst, wir wissen, daß Du Deine Trinkbarkeit praktisch nur heuchelst denn nur 0,3% deiner enormen Menge von 1,3866 Milliarden Kubikkilometer können wir tatsächlich trinken. Wir wissen, daß Du enorm wandlungsfähig bist, weil Du fest, flüssig und gasförmig in Erscheinung trittst. Und wir kennen sogar Dein Intimleben; Du bestehst aus einem Sauerstoffatom, an dem aber zwei Wasserstoffatome hängen, die Du mit einen sagenhaften Winkel von 104,45 Grad auseinanderspreizt.

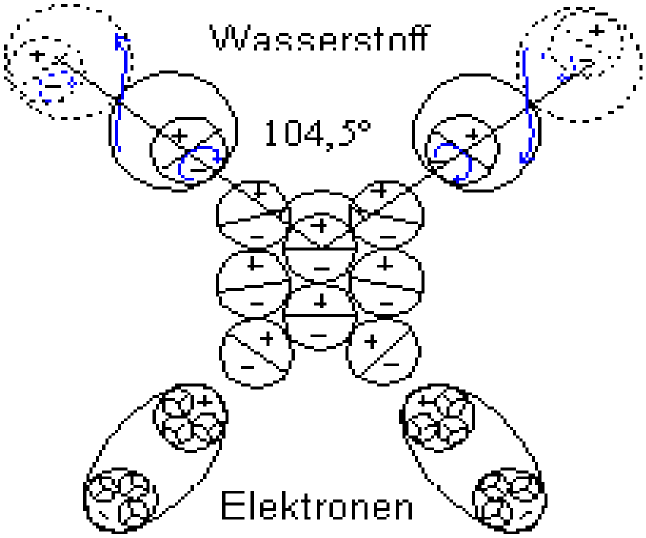

Wir sind froh, daß Du uns saubermachst und Dich willig für Taufen, Hände – in Unschuld - waschen, zur Weinpanscherei und noch allerlei anderer menschlicher Blödheiten hergibst.

Aber eines sei Dir jetzt gesagt Du sauberes Unschuldslamm, jetzt ist Schluß mit lustig, in naher Zukunft arbeitetest Du wirklich und täglich, Du wirst als Knallgas arbeiten, Dich beinhart andauernd zerlegen und wieder zusammensetzen und das zum Wohle der gesamten Menschheit.

Obwohl Wasser bzw. Wasserstoff „nur“ ein Energieträger und keineswegs selbst eine Energiequelle ist, d.h. das Wasserstoffgas > Knallgas erst mit Hilfe einer geeigneten Energiequelle erzeugt werden muß, ist WASSER letztendlich die Energiequelle schlechthin, wenn es gelingt Knallgas „OnBoard – on demand“ genau in der jeweils benötigten Menge dort herzustellen wo es auch wirklich gebraucht wird.

Ich bin zutiefst überzeugt, daß das bereits dem einen oder anderen Pionier gelungen ist und daß dies auch Sie und ich kurzfristig nutzen können.

2.1.1.1. Grundlegende Eigenschaften des Wasserstoffs

Die Bezeichnung Wasserstoff existiert bereits seit 1787. Der Franzose Lavoisier "taufte" den Wasserstoff als "hydrogene" (hydor = Wasser, griechisch; genes = erzeugend) = Wasser-Bildner. Wasserstoff selbst ist ein Molekül und besteht aus zwei Wasserstoffatomen (H_2).
Wasserstoff ist etwa vierzehnmal leichter als Luft.

Wasserstoff kommt in drei Formen (Isotopen) vor: als leichter, schwerer und als superschwerer Wasserstoff (Protium, Deuterium und Tritium). Alle besitzen ein Proton, sie haben jedoch verschiedene Neutronenzahlen.

Wasserstoff ist bei normalem Druck und normaler Temperatur ein Gas, das dünnste und leichteste überhaupt und deshalb von sehr geringer Energiedichte. Wasserstoff verflüssigt sich bei -253°C (etwa 800mal dichter als gasförmiger Wasserstoff) und gefriert bei - 259°C (Dichte noch einmal 10 Prozent größer.)

2.1.1.2. Die physikalisch Eigenschaften des Wasserstoffs

- ungiftig und nicht reizend
- umweltneutral, nicht wassergefährdend
- geruchlos
- geschmacksneutral
- unsichtbar, fast unsichtbare Flamme
- flüchtig, leichter als Luft
- entweicht durch kleinste Öffnungen
- versprödende Wirkung auf einige Materialien
- nicht korrosiv
- nicht radioaktiv
- nicht krebserzeugend

2.1.1.3. Die chemischen Eigenschaften des Wasserstoffs

- kritischer Druck 13 kPa
- Siedetemperatur TS = -252,77 °C = 20,3 K
- Schmelztemperatur TSch = - 258,6 °C = 14,4 K
- Dichte bei 20,3 K und 1013 mbar = 70,79 g/l
- Gasdichte bei 20,3 K und 1013 mbar = 1,34 g/l
- Gasdichte bei 273,15 K und 1013 mbar = 0,089 g/l
- Wasserstoff ist 15mal leichter als Luft
- Molekular-Gewicht = 2,016 g/mol
- Verdampfungswärme = 445,4 kJ/kg
- unterer Heizwert: 119,97 MJ/kg = 33,33 kWh/kg = 10,78 MJ/Nm3 = 3,0 kWh/Nm3
- oberer Heizwert: 141,80 MJ/kg = 39,41 kWh/kg = 12,75 MJ/Nm3 = 3,5 kWh/Nm3
- Zündgrenzen in Luft: untere 4,0 - 4,1 Vol %; obere 75,0 - 79,2 Vol.-%
- Selbstentzündungs-Temperatur: 585 °C
- Minimale Zündenergie in Luft: E = 0,02 mJ
- bei 29 % ist Tmax = 2318 °C Verbrennungstemperatur in Luft
- bei 29 % ist TmaxO2 > 3000 °C Verbrennungstemperatur mit reinem Sauerstoff
- max. Flammgeschwindigkeit: 346 cm/s
- Wasser enthält 11,2 Gew.-% Wasserstoff
- 1/6000 Atome sind "Schwerer Wasserstoff" = Deuterium = D = zusätzlich 1 Neutron im Atomkern - 1/1Billiarden Atome sind "Überschwerer Wasserstoff" = Tritium = T = zusätzlich 2 Neutronen im Kern.

Rein aus den physikalischen und chemischen Eigenschaften des Wasserstoffs selbst läßt sich für den Verbraucher kein höheres Gefahrenpotential als bei herkömmlichen Energieträger ableiten. Wasserstoff kann durchaus sicher gehandhabt werden, solange seine speziellen

Eigenschaften, manchmal besser, manchmal schlechter und manchmal nur anders im Vergleich zu anderen Kraftstoffen - berücksichtigt werden.

2.1.1.4. Wasserstoff Verbrennung

Die Reaktionsgleichung bei der Verbrennung (Oxidation) von Wasserstoff lautet:

H2 + 0,5 O2 → H2O + Energie, (das ist zumindest die heute gängige Lehrmeinung)

Die freiwerdende Energiemenge beträgt: 289,5 kJ/mol = 0,08 kWh/mol = 40,2 kWh/kg H2

Kommt Wasserstoff mit Luftsauerstoff in Kontakt und wird die erforderliche Zündenergie zugeführt, verbrennt beides als sogenanntes Knallgas, gemeinsam wieder zu Wasser.

Die z. Zt. gültige Lehrmeinung ist: „Dabei werden bis zu 90% der Energie wieder abgegeben, die vorher zur Spaltung des Wassers aufgebracht werden mußten," aber das US > DOE (Department of Energy) vertritt heute bereits die Meinung, daß etwa 40% des Wassers reine Energie darstellt; es scheint aber dieser Prozentsatz ist tatsächlich wesentlich höher.

Bei seiner Verbrennung entsteht, abgesehen von Wasser in Form von Wasserdampf, nur noch eine sehr kleine Menge Stickoxid durch die Reaktion mit Luftstickstoff. Diese Eigenschaften lassen sich dazu ausnutzen, sehr magere Gemische mit sehr geringer Stickoxidemission zu verbrennen und trotzdem eine hohe Effizienz zu erreichen. Allerdings können diese Eigenschaften auch zu ungewollt harten Verbrennungen führen, wenn etwa eine weichablaufende Deflagration in eine Detonation übergeht. Die damit verbundenen starken Druckamplituden sind mit einer erheblichen mechanischen Beanspruchung des Brennraumes und der bewegten Teile verbunden.
Bei der Verbrennung entstehen keine Kohlenwasserstoffe, keine Schwefeloxide, kein Kohlenmonoxid, nicht einmal Kohlendioxid (CO_2), welches bei der Verbrennung von fossilen Brennstoffen entsteht und für den weltweiten Treibhauseffekt verantwortlich gemacht wird.

2.1.1.5. Flüchtiger Wasserstoff

Wasserstoff ist sehr leicht flüchtig. Dies spiegelt sich im großen Diffusionskoeffizienten sowie dem großen Dichteunterschied zur Luft wider. Gelangt gasförmiger Wasserstoff in die Umgebung, durchmischt er sich sehr schnell mit Luft und unterschreitet dementsprechend rasch die untere Zündgrenze. Der hohe Diffusionskoeffizient und die geringe Viskosität haben ihre Ursache in den sehr kleinen Molekülen. Dies bewirkt zum einen, daß er sich sehr rasch mit Luft vermischt, aber zum anderen auch einfach durch engste Spalten entweichen kann. Wird flüssiger Wasserstoff freigesetzt, erwärmt sich dieser durch seine hohe Wärmeleitfähigkeit und die große Temperaturdifferenz gegenüber Luft relativ schnell, so daß er (0,4 bis 0,8 mm/s) verdampft.

2.1.1.6. Spezielle Eigenschaften des Wasserstoffs

Für das menschliche Auge sind Wasserstoffflammen kaum sichtbar, da sie im ultra-violetten Bereich strahlen.

Die Verbrennungsgeschwindigkeit ist relativ hoch, so daß sich die Flammen schnell ausbreiten und ein Feuer auch schnell wieder vorbei ist.

Wegen der geringen Dichte steigt das Gas sehr schnell auf. Gasgemische in der Nähe der unteren Zündgrenze weisen jedoch eine ähnliche Dichte wie Luft auf, so daß sie sich kurzfristig auch horizontal bewegen können.

Die Mindest-Zündenergie ist relativ gering.

Die Hitze-Abstrahlung ist relativ gering, weil keine glühenden Kohlenstoff-Partikel vorhanden sind, die Wärme abstrahlen könnten. Dadurch besteht die Gefahr, unbeabsichtigt in die unsichtbare, kaum wahrnehmbare Flamme zu greifen.

Es wird kein Rauch oder Qualm erzeugt, solange nicht andere Substanzen mitbrennen.

Es ist nicht ratsam, ein Wasserstofffeuer löschen zu wollen. Es ist besser, die Wasserstoffzufuhr zu stoppen, so daß dem Feuer die Nahrung ausgeht, und gleichzeitig umliegende Objekte mit Wasser zu kühlen. Sollte ein Löschversuch unternommen werden, könnte die Flamme eventuell zwar gelöscht werden, es könnte aber noch weiterhin Wasserstoff ausströmen, der sich dann eventuell etwas später woanders wieder entzündet oder eine (Knallgas) Explosion auslöst. Es ist sehr schwierig, eine Flamme zu löschen, die fast unsichtbar ist.

2.1.1.7. Katalysatoren zur Wasserspaltung

Justi and Kalberlah haben 1966 mit Gleichstrom und Nickel und mit Zweischichten porösen Elektroden, gearbeitet.

Useful catalysts are: Nickel, Platinum, Platinum-Nickel alloys, Nickel-Stainless steel, nobel metals, Re, W, and alloyas thereof.

2.1.1.8 Thermodynamische Hauptsätze

Ich führe diese thermodynamischen Grundsätze deshalb an, weil diese im Hinblick auf „neue Energien“ immer und immer wieder zu Konflikten und zur Konfrontation mit dem Wissen der „gestandenen“ Technik unserer Universitäten und Hochschulen führen und nicht JEDER sie wirklich kennt:

Diese lauten:

1. Hauptsatz:
Man kann weder Energie gewinnen noch verlieren.

2. Hauptsatz:
Es gibt keine Maschine, die Wärme vollständig in andere Energie umwandeln kann.

3. Hauptsatz:
Der absolute Nullpunkt der Temperatur ist unerreichbar

4. Hauptsatz:
Wenn ein System A sich mit einem System B sowie B sich mit einem System C im thermischen Gleichgewicht befinden, so befindet sich auch A mit C auch im thermischen Gleichgewicht.

Diese Thermodynamische Hauptsätze sind heute unter Wissenschaftlern z. T. sehr umstritten.

2.1.1.9. H_2O Schwingung Frequenz

	Frequenzen in Giga Hertz					Frequenzen in Mega Hertz				
GHz	2	4	8	16	32	64	128	256	512	1
109.71	54.86	27.43	13.71	6.86	3.43	1,714.22	857.11	428.55	214.28	1
47.85	23.93	11.96	5.98	2.99	1.50	747.66	373.83	186.91	93.46	4
112.68	56,34	28,17	14,085	7.0425	3,52125	1760,625	880,125	440,15625	220,07813	1

When the synthetic 'oil crisis' happened in the 70's, Dr. Puharich thought his research could be applied to increasing the hydrolysis of water to produce hydrogen that could be burned for fuel in auto engines, heating or whatever...

He found that water, when bubbled at a current of 600 cycles per second, had the highest efficiency of disruption to the gaseous state. This is intriguing because John Keely stated that water could be disrupted at 610, 620 and 12,000 cps, with the most effective frequency being 42.8 khz

The 600 cps of Puharich was thus amazingly close to that of Mr. Keely at 610.

One of the other problems with burning hydrogen as fuel, it burns very, very rapidly, so it is harder to get a decent thrust with it. So, I am told by Dr. William A. Rhodes, the TRUE discoverer of what is erroneously called 'Brown's Gas'.

There are ways you can mix in outside air along with OXYGEN and hydrogen to expand the duration of the combustion to provide more thrust.

Best documented and proven by Dad Garrett and son here in Dallas in 1935 with their 4 cylinder automobile that ran on water from White Rock Lake...the trick is a carburetor fed from a hydrolysis unit containing 25% battery acid (sulphuric) continually mixed with 75% water...to improve conduction....also textured plates with as many points as possible since gas squeezes off these points.

Yes, oxygen is on the positive pole and hydrogen on the negative, but you let them mix together, then add a variable mixture of outside air (78% nitrogen & other gases), along with a very light vapor from the water, which is exploded in the engine....so you rid yourself of hydrogen embrittlement (making the metal brittle from suffusion of pure hydrogen gas) and you increase the thrust by extending the gas mixture explosion.

Of course, using Keely's method of 42.8khz, you just blow up the gas and use the pressure 3 drops instantaneously exploded produced 29,000 psi...store that in a tank and run an airmotor..... when tank pressure gets to 2000 psi or so, blow up more water...piece of cake, eh??

2.2.0.0. Anmerkungen zu Knallgas, Kfz Motor und Brennstoffzelle

Das Problem der zum Teil in (Groß-) Versuchen laufenden Wasserstoff(Knallgas)-motoren liegt keineswegs bei den Motoren selbst, sondern liegt darin, daß davon ausgegangen wurde, daß mehr oder weniger reiner Wasserstoff, zum Teil in verschiedenen Aggregatzuständen, für die Knallgaserzeugung, genauso wie heute üblicherweise Benzin oder Dieselöl im Kfz als Verbrauchsmaterial, in speziell konstruierten und damit finanziell aufwendigen Wasserstofftanks (Metallhybridspeicher etc.), mitgeführt wird. Infolge der hochexplosiven Eigenschaften des Wasserstoffes hat sich dessen Erzeugung, (üblicherweise heute mittels industrieller Elektrolyse), die Lagerung, Distribution und Verwendung durch die nicht besonders geschulte Allgemeinheit im Hinblick auf sicherheitsrelevante Maßstäbe zum Teil bedenklich aber insbesondere als äußerst kostenintensiv herausgestellt.

Das Problem ist, wie erzeuge ich bei Umstellung auf eine „Wasserstoffwirtschaft“ die erforderlichen riesigen Mengen an Wasserstoff wirklich kostengünstig und wie bringe ich diesen hochexplosiven Stoff gefahrlos zu den Verbrauchern? Die industrielle Forschung hat dazu bis heute keinen geeigneten brauchbaren Ansatzpunkt gefunden.

Aus den vorher beschrieben wirtschaftlichen Gründen haben und hatten alle heute existierenden „Wasserstoff (Knallgas)fahrzeugmotore“ und auch die Brennstoffzellentechnik keine reelle Chance einer tatsächlichen, aus den Experimentierstadium hinausgehenden, wirtschaftlichen **Nutzung.**

Nur Verfahren, die aus Wasser Knallgas erzeugen und bei denen dieses Knallgas unmittelbar nach seiner Erzeugung sofort als Energiequelle genutzt wird, werden in der Zukunft tatsächlich bestehen können. Das bedeutet sowohl beim Kfz als auch sonstwo immer nur eine „OnBoard - Ondemand“ Wasserstoff > Knallgaserzeugung und Verbrauch.

Nach gängiger Lehrmeinung kann ein Wasserstoffauto, das den Wasserstoff während der Fahrt per Elektrolyse selbst produziert, nicht funktionieren. Der Grund liegt darin, dass bei der klassischen Elektrolyse rund zweimal soviel elektrische Energie hineingesteckt werden muss, als man bei der Verbrennung des entstandenen Wasserstoffs mit Sauerstoff zurück geliefert bekommt.

Dies ist der Hauptgrund, weshalb die Forschungsarbeiten in dieser Richtung von wissenschaftlicher Seite nie ernst genommen wurden.

2.2.0.1. Grundlagen

Zur Wasserstoff-Herstellung sind viele unterschiedliche Methoden möglich. Heute geschieht es überwiegend unter Verwendung von fossilen Rohstoffen als Ausgangsprodukt und zum anderen durch die Elektrolyse, die lediglich Wasser und Strom benötigt.

Soll eventuell der Wasserstoff nach seiner Erzeugung flüssig gespeichert werden, muß er auf -254 °C (= 20 K) abgekühlt und verflüssigt werden. Heutige Verflüssigungsanlagen leisten ungefähr 10 bis 15 Tonnen Wasserstoff pro Tag. Zur Verflüssigung wird allein bereits ungefähr 1/3 der im Wasserstoff gespeicherten Energie benötigt.

Wasserstoff (Knallgas) kann man prinzipiell erzeugen durch verschiedenste Elektrolyseverfahren und thermische Spaltung (Thermolyse)

2.2.0.2.Energiebereitstellung

Die heutige aktuelle Lehrmeinung ist:

Die Herstellung sowie die Aufbereitung von Wasserstoff benötigt ziemlich viel Energie. Momentan wird diese Energie hauptsächlich aus fossilen Energiequellen bezogen. Dies bedeutet jedoch, daß die natürlichen Ressourcen weiter dezimiert werden und zudem die Schadstoffbelastungen weiter steigen. Die eigentlichen Vorteile von Wasserstoff kommen somit nicht zum Tragen, weswegen eine derartige Wasserstoff-Wirtschaft derzeit kaum Sinn machen würde.

Die Sonne spendet unserem Globus Tag für Tag die zehntausendfache Menge des Energiebedarfs der gesamten Erdbevölkerung. Daraus resultiert das meiner Meinung nach unrealisierbare Konzept einer "solaren Wasserstoffwirtschaft", die bereits in den fünfziger Jahren entwikkelt wurde. Hinter diesem Begriff verbirgt sich die Idee, daß mit Hilfe der Sonnenenergie Wasser in Wasserstoff und Sauerstoff gespalten werden kann. Der Wasserstoff selber dient lediglich als Energiespeicher, um Energie zu transportieren. An anderer Stelle kann der Prozeß z.B. in einer Brennstoffzelle wieder umgekehrt werden. Die Sonnenenergie kann über Photovoltaik zuerst in Strom umgewandelt werden, um dann diese elektrische Energie zu nutzen, um durch Elektrolyse Wasserstoff zu erzeugen.

Heute gibt es bereits Solaranlagen, die auf direktem Weg Wasserstoff erzeugen können. In diesem Fall wird die Sonnenenergie derart stark gebündelt, daß ausreichend hohe Temperaturen erreicht werden, um Wasser zu spalten > Thermolyse. In diesem Fall ist ein Umwandlungsschritt weggefallen, wodurch der Wirkungsgrad stieg. Somit ist nur eine lenkbare “kleine“ Thermolyse der wirklich zukunftsträchtige Weg zur Wasserstoffnutzung.

Zur bisherigen Herstellung von Wasserstoff ist relativ viel an Energie notwendig, da dieses Element eine hohe Bindungsenergie besitzt. Die Sauerstoffatome sind nur schwer von den Wasserstoffatomen zu trennen. Deswegen kommt Wasserstoff in der Natur so gut wie nie allein vor, da sich das H_2-Molekül immer ein Sauerstoffatom sucht und zu Wasser reagiert (oxidiert). Würde man für diesen Vorgang Energie benutzen, die aus Primärenergieträgern erzeugt worden ist, wäre dies langfristig betrachtet nicht sinnvoll. Es ist ökologisch betrachtet unsinnig, Kohle zur Energiegewinnung unter Schadstoff-Ausstoß zu verbrennen, um mit der daraus gewonnenen Energie Wasser aufspalten zu können, damit dann Wasserstoff als "schadstofffreier Energieträger" genutzt werden kann.

Mit Hilfe der Sonnen- oder Windenergie stünde jedoch ein nahezu schadstofffreies Verfahren zur Verfügung, es stellt sich nur die Frage: „ist das auch wirtschaftlich?“

Unter den erneuerbaren Energien rangiert die Wasserkraft mit 68 % an erster Stelle gefolgt von Windkraft mit 19%, Müllverbrennung 9 % und Photovoltaik 0,06 %.

Verständlicherweise kann die Energie-Versorgung nicht von heute auf morgen umgestellt werden. Konventionelle Kraftwerke können nicht ohne weiteres stillgelegt werden (vertraglich zugesicherte Rest-Laufzeiten > wurden Verträge immer eingehalten?), und regenerative Energien verfügen noch nicht über das notwendige Volumen, eine etwaige Energielücke umgehend zu schließen. Deswegen ist eine Übergangszeit sinnvoll, in der auf ein Energie-Mix zurückgegriffen wird. Auf diese Art können ausreichend Erfahrungen mit der neuen Technik gesammelt werden, wodurch wiederum allmählich Kosten gesenkt werden können. Der Wechsel von fossilen Energieträgern zum Wasserstoff kann dann stattfinden, wenn die damit einhergehende Technik auch für nahezu Jedermann auch bezahlbar ist.

2.2.0.3. Speicherung

Bis dato ist eine Wasserstoff Speicherung nahezu immer notwendig, weil Wasserstoff nicht dort an Ort und Stelle erzeugt werden kann, wo er auch gebraucht wird. Außerdem stimmt in Mitteleuropa das Energieangebot der Sonne nur schlecht mit dem Energiebedarf überein. Im Sommer, wenn weniger Energie benötigt wird, scheint die Sonne stark. Im Winter, wenn deutlich mehr Energie verbraucht wird, scheint sie jedoch nur begrenzt. Zudem gibt es starke tageszeitliche und wetterbedingte Schwankungen der Sonneneinstrahlung. Ähnliches gilt für die Windenergie oder andere alternative Konzepte. Es muß jedoch für eine gute Energieversorgung möglich sein, auch kurzfristig hohe Energiemengen zur Verfügung zu stellen in sogenannten Spitzenzeiten.

Die Speicherung eines jeden Energieträgers ist immer mit Risiken verbunden, weil sich Energie nicht so einfach speichern läßt. Energie will frei sein.

Kein anderes Lebewesen als der Mensch versucht, Energie hochkomprimiert zu horten. In der Natur ist es eher so, daß viel Energie auf wenig Raum Leben zerstört. Viel Energie bedeutet nahezu immer auch viel Wärme bzw. viel Bewegung, und das ist nur schwer mit den uns bekannten Lebensformen vereinbar.

Wasserstofftanks sind dementsprechend extrem hohen Belastungen ausgesetzt. Sie müssen Energie mit möglichst hoher Dichte speichern, müssen zum Teil hohe Temperatur-Unterschiede aushalten und außerdem (bei mobilen Behältern) eine Beförderung mit ihren Erschütterungen und Schwingungen ermöglichen.

Ehemalige Bedenken, daß Wasserstoff sich nicht als Kraftstoff für Fahrzeuge eignen würde, weil die Speicherung noch nicht zufriedenstellend geklärt sei, sind längst Vergangenheit. In den letzten Jahren hat sich jedoch speziell in diesem Bereich sehr viel getan. Es gibt mittlerweile neue Techniken zum Aufbau von Wasserstoff-Tanks. Es gibt Materialien, die auch stärkster Belastung standhalten. Und auch das Brenn- bzw. Explosions-Verhalten von Wasserstoff ist zunehmend besser bekannt.

Im Laufe der Entwicklung von Speichermedien für Wasserstoff gab es eine Vielzahl von Methoden, denen in der Vergangenheit zum Teil hervorragende Aussichtschancen zugesprochen wurden. Teilweise wird an einigen, für mich eigentlich toten Verfahren immer noch geforscht, andere Projekte wurden eingestellt. Es ist vor diesem Hintergrund aber durchaus möglich, daß durch diese Weiterentwicklung bereits totgesagte Verfahren wieder neu hervorgeholt werden.

Heute gibt es, aus Sicht der Industrie, jedoch nur drei wirklich aussichtsreiche Speichermethoden:
- die Speicherung von gasförmigem Wasserstoff in Druckbehältern,
- die Speicherung von flüssigem Wasserstoff in vakuumisolierten Behältern,
- die Einlagerung von Wasserstoff in Metallhydriden.

Ich bin der Meinung man braucht keine einzige dieser Speichermethoden, da die Erzeugung und der Verbrauch des Wasserstoff > Knallgases „on the spot“ erfolgen muß, hier liegt eine krasse Fehlentwicklung vor.

2.2.0.4. Wasserstoff Kosten

Die Bestimmung des aktuellen Preises von Wasserstoff ist ein schwieriges Unterfangen, weil er je nach Herstellungsverfahren sehr stark variiert. Dabei spielt sowohl die Produktionsmethode als auch die Art der Energie-Erzeugung eine wesentliche Rolle. Momentan liegt der Liter-Preis für Wasserstoff je nach Herstellungsverfahren durchschnittlich bei 0,50 €, was knapp 2 € für einen Liter Benzin entsprechen würde. Als Vergleichsgrundlage wird hierbei das so genannte Benzin-Äquivalent herangezogen. Für die Umrechnung wird die vorgegebene Energiemenge an Wasserstoff mit der gleichen Energiemenge von Benzin gleichgesetzt. Man erhält dann als Ergebnis, daß ein Liter Benzin etwa die vierfache Menge Wasserstoff entspricht.

2.2.0.5. Can your car run on tap water; could this work? Fact or Fiction? It is Fact!

Nach gängiger Lehrmeinung kann ein Wasserstoffauto, das den Wasserstoff während der Fahrt per Elektrolyse selbst produziert, nicht funktionieren. Der Grund liegt darin, dass bei der klassischen Elektrolyse rund zweimal soviel elektrische Energie hineingesteckt werden muss, als man geliefert bekommt (bei der Verbrennung des entstandenen Wasserstoffs mit Sauerstoff).

Dies ist der Hauptgrund, weshalb auch die Forschungsarbeiten des inzwischen verstorbenen Pioniers dieser Technologie, Stanley Meyer, von wissenschaftlicher Seite nie ernst genommen wurden. Allerdings hat Stan Meyer es auch nie zugelassen, daß seine Technologie von unabhängiger Seite geprüft wurde.

Doch nicht nur Stan Meyer, sondern Dutzende anderer Erfinder, haben bereits Wassermotoren gebaut und/oder sie patentrechtlich schützen lassen.

2.2.0.6. Version # 1 from someone who like to be an anonymous

These plans were sent to me anonymously, from someone who does not want his or her name printed (I think for obvious reasons).

I let them check by an expert who believes that they are real and feasible and I also have talked with another individual who has patented a similar device, and I know by personal experience that the technology is sound.

So, although we cannot guarantee it, we believe these plans will enable you to build a car that runs on water.

If you test it out, though, do as the writer suggests and use an old car that doesn't represent a loss of value if you can't make it work. And leave everything intact so that you can always reconnect back to gas if you have to.

But if you do get it working, please send us your experience for our readers. You could be a national hero and help save our country and our world.

I know for certain that an automobile had run on water. So, this could be an interesting project for you mechanical types, with a great reward of never having to purchase gasoline for the rest of your life — and helping humanity at the same time.

The text sent from the anonymous individual was edited slightly for better reading. The following is his/her words and drawings, which has been given into the public domain.

Introduction

It is suggested you try this out to begin with on a second vehicle you own, one that you don't need to live with every day, until you perfect this technology.

Do-it-yourself plans allow all individual to make a difference. This is the easiest and lowest-cost way to convert your car to run on (relatively) free energy.

Now, with existing technology, anyone can stand up and make a difference by reducing the local automotive pollution, eliminate gasoline expenses, help restore our atmosphere, and breathe a little easier.

In putting these plans into operation, you will be making use of your entire existing system except for the fuel tank and the catalytic converter.

The Plan:

Build and install a low-cost alternative method for running your vehicle (internal combustion engine) on tap water, using off-the-shelf components.

This "minisystem" runs easily from your existing battery and electrical system, and it plugs into your carburetor with simple off-the-shelf fittings.

You will be installing a plastic water tank, a control circuit, a reaction chamber, a hi-pressure carb/FI fitting, and 3 gauges, and then hooking into your existing carb/FI.

The simplicity comes from its being an "on-demand" system requiring no fancy storage or plumbing. You crank the gas pedal or throttle, and you electrically create more vapor for immediate consumption, on demand; low-high flow rate as needed, from idle to maximum power. The only real change is that you are using tap water as fuel, instead of the traditional petroleum-based fuel.

Given a choice, which way would you choose?

Frequently Asked Questions

Q: Does it really work?

A: Yes; this is well-established technology dating back to stainless steel. But be sure to follow these instructions using the proper mechanical and electrical assembly techniques, as this plan incorporates the best qualities of several techniques.

Q: How does it qualify as "free energy"?
A: If you're paying someone for the water you use, then it is not strictly free. But the alternative is to keep buying into expensive gasoline and its resultant hydrocarbon pollution.

Q: Is it safe?
A: Technically, it is safer than running on fossil fuel because you are no longer choking on your own emissions (health-wise). In general, it is practically as safe as your current gasoline arrangement. You will be installing a few simple safety devices, using current automotive standards.

Q: What kind of performance can I expect?
A: Properly adjusted, your modified vapor-only fuel system will run cooler, and at a modestly higher power level. The mileage performance expected from this design ranges from 50-300 mpg (of water), depending on your adjusting skills.

Q: Can I do the modification myself?
A: Why not? If you don't have any mechanical skills, and you know someone with basic mechanical and/or electrical skills, you can even delegate some of the construction. If you are using a fuel-injected engine, you may have to get a mechanic's opinion. [There will have to be an adapter inserted into the fuel-injection system, just as you would have to do if you were going to run on propane, hydrogen, or natural gas.)
Q: What is the environmental impact that my vehicle will have?
A: It will be producing H_20 steam (water vapor) and unbearable O_2 (Oxygen). Hence, it will be cleaning the environment, rather than dumping nauseous toxins into it. Plus, you will be helping to save our dwindling supply of atmospheric oxygen. Any excess vapor in the reaction becomes either steam or oxygen. You can also expect to be receiving more than casual interest from those around you.

Q: Isn’t this really a steam engine?
A: No. Really. Exceedingly high temperature and pressure are not used. This is strictly an internal-combustion engine (burning orthohydrogen) with residual steam in the exhaust as a by-product.

There are a few things you should know about gasoline:

Gasoline as a fuel is not necessary; it is optional.

Gasoline versus Water

There is a lot of thermo chemical energy in gasoline, but there is even more energy in water. The DOE (Department of Energy) has quoted about 40%, so it is probably much more than that.

Most people are unaware that "internal combustion" is defined as "a thermo-vapor process" — as in "no liquid in the reaction". Most of the gasoline in a standard internal combustion engine is actually consumed, (cooked, and finally, broken down) in the catalytic converter after the fuel has been not-so-burnt in the engine. Sadly, this means that most of the fuel we use in this way is used only to cool down the combustion process, a pollution-ridden and inefficient means of doing that.

How It Works

Exceedingly simple. Water is pumped as needed to replenish and maintain the liquid level in the chamber. The electrodes are vibrated with a 0.5-5A electrical pulse which breaks $2(H_2O)$ => $2H_2 + O_2$. When the pressure reaches say 30-60 psi, you turn the key and go. You step on the pedal, you send more energy to the electrodes, and thus more vapor to the cylinders; i.e. fuel vapor on demand.

You set the idle max-flow rate to get the most efficient use of power, and you're off to the races.

In the big picture, your free energy is coming from the tap water in an open system, as the latent energy in the water is enough to power the engine and hence drive the alternator and whatever belt-driven accessories. And the alternator is efficient enough to run the various electrical loads (10 - 20 amps), including the additional low current to run this vapor reaction. No extra batteries are required.

STEP BY STEP CONSTRUCTION (Please refer to diagrams)

OVERVIEW - Here is the suggested sequence of steps:

Install the CHT (or EGT) gauge and measure your current operating temp range (gasoline), for comparison.

Build and test the controller to verify the correct pulse output.

Build the reaction chamber and test it with the controller (i.e pressure out).

Install the tank, controller, chamber, and pressure fittings.

Run engine and adjust the control circuit as necessary for best performance.

Install the stainless-steel valves and get the pistons/cylinders coated with ceramic.
Coat the exhaust system with ceramic without the catalytic converter (or let it rust out and then replace the whole dang thing with stainless steel pipe sections).

YOU WILL NEED

plastic water tank with pump and level sensor.
control circuit, wiring, connectors, and epoxy.
reaction chamber with electrodes and fittings.

3/8" stainless steel flex-tubing, fittings and clamps.
carb/FI vapor-pressure fitting kit. - pressure, CHT (or EGT), & level gauges.
stainless steel valves.
copper mesh junction.
ceramic surface treatment for cylinders & pistons.
stainless steel or ceramic treated exhaust assembly.

BASIC TOOLS

drill, screwdriver and pliers; hole cutter; wire-wrap; solder-iron and clippers; DVM and oscilloscope.

REACTION CHAMBER

Construct as shown in the diagrams. Use a section of 4" PVC waste pipe with a threaded screw-cap fitting on one end and a standard endcap at the other. Make sure to drill-and-epoxy or tap threads thru the PVC components for all fittings. Set and control the water level in the chamber so that it well submerses the pipe electrodes; yet leave some headroom to build up the hydrogen/oxygen vapor pressure. Use stainless steel wires inside the chamber or otherwise use a protective coating; use insulated wires outside. Ensure that the epoxy perfects the seal, or otherwise lay down a bead of water-proof silicone that can hold pressure.

The screw fitting may require soft silicone sealant, or a gasket; its purpose is to hold pressure and allow periodic inspection of the electrodes. No leaks, no problems. Make sure you get a symmetric 1-5mm gap between the 2 stainless steel pipes. The referenced literature suggests that the closer to 1mm you get, the better. You will want to get your chamber level sensor verified before you epoxy the cap on.

Make your solder connections at the wire/electrode junctions nice, smooth, and solid; then apply a water-proof coating, e.g. the epoxy you use for joining the pipes to the screw cap. This epoxy must be waterproof and be capable of holding metal to plastic under pressure. You will want to get your chamber level sensor verified before you epoxy the cap on.

CONTROL CIRCUIT

The diagrams show a simple circuit to control and drive this mini system. You are going to make a 'square-pulse' signal that 'plays' the electrodes like a tuning fork; which you can watch on an oscilloscope. The premise given by the literature is: the faster you want to go down the road, the 'fatter' you make the pulses going into the reaction chamber. Duty cycle will vary with the throttle in the vicinity of 90%MARK 10%SPACE (OFF/ON).

There is nothing sacred about how the pulse waveform is generated; there are many ways to generate pulses, and the attached diagrams show a few. The diagram shows the NE555-circuit approach from the referenced patent. The output switching transistor must be rated for 1-5 amps @ 12VDC (in saturation).

Go with a plan that works for you or your friendly neighborhood techno or mechanic and go get all the circuit elements from your local electronics store, such as Radio-Shack or Circuits-R-Us, including the circuit board, IC sockets, and enclosure/box.

Digi Key has better selection, service, and knowledge; plus, they have no minimum order. Be sure to use a circuit board with a built-in ground plane, and to accommodate room for mounting 2 or 3 of the gauges. Mounting the reaction chamber in the engine compartment will require running a stub to your pressure gauge where you can watch it.

You can easily make 30-gauge wire-wrap connections between the socket pins and thru-hole discrete components having wire leads. Also make sure to get spec sheets on any IC you use. More details of the best circuits to use will be announced pending prototype testing. You will want to get your chamber level sensor verified before you epoxy the cap on.

Throttle Control

If you have a throttle position sensor, you should be able to access the signal from the sensor itself OR from the computer connector. This signal is input to the circuit as the primary control (i.e. throttle level = pulse width = vapor rate).

If you don't have such a signal available, you will have to rig a rotary POT (variable resistor) to the gas linkage (i.e. coupled to something at the gas pedal or throttle cable running to the carb or FI. If you make the attachment at the carb/FI, be sure to use a POT that can handle the engine temp cycles. Don't use a cheesy-cheapy POT; get one rated for long life and mechanical wear; mount it securely to something sturdy and stationary that will not fall apart when you step on the gas.

Control Range. The full throttle RANGE (idle-max) MUST control the vapor rate, i.e. pulse-width (duty). The resistor values at the throttle signal must allow the throttle signal voltage, say 1-4 Volt swing, to drive the VAPOR RATE. You will be using this voltage swing to generate a 10% ON 'square' pulse. The patent implies using a 'resonant' pulse in the 10-250 KHz frequency range; but it is not explicitly stated so.

In this circuit, you will simply tune to whatever frequency makes the most efficient vapor conversion. You will have to get into the specs for each IC you use, to insure you connect the right pins to the right wires, to control the frequency and pulse width. You can use spare sockets to try out different discrete component values. Just keep the ones that are spec-compatible in the circuit, and get the job done.

You crank up the throttle signal and put more electrical energy (fatter pulses) into the electrodes; verify you can get 10% duty on the scope (2 - 100 used on the horizontal time-base). Your averaging DVM will display the 90%-10% DC voltage across the output transistor (Vce or Vds or Output to Ground). Set and connect DVM in the supply current and measure .5 - 5 amps, without blowing the DVM fuse. Now verify that you got everything you wanted.

Verify your wiring connections using your DVM as a continuity detector. Check your wiring 1 at a time and yellow line your final schematic as you go. You can best use board-mount miniature POTs for anything you want to set-and-forget. The LED’s are there to give you a quick visual check of normal vs abnormal operation of your new creation. You will want to get your chamber level sensor verified before you epoxy the cap on.

CARB/FI CONNECTION

The diagram also shows that fittings are required to the carb/FI I. There are ready-made kits (such as by Impco) available for making your pressure fittings to the carburetor or fuel-injector as the case may be. You will necessarily be sealing the built-in vents and making a 1-way air-intake.

The copper mesh comprises the inadvertent backfire' protection for the reaction chamber. Make sure that all vapor/duct junctions are air-tight and holding full pressure without leakage. Your new 'system' is considered successful and properly adjusted when you get the full power range at lower temp and minimum vapor flow without blowing the pressure safety valve.

CHT (or EGT)

Monitor your engine temp with the CHT (cylinder head temp) or EGT (exhaust gas temp) instead of your original engine temp indicator (if any). Your existing gauge is too slow for this application and will not warn you against overheating until after you have burnt something. Make sure that your engine runs no hotter than in the gasoline arrangement. VDO makes a CHT gauge with a platinum sensor that fits under your spark plug against the cylinder head (make sure it is really clean before you re-install your spark plug (as this is also an electrical ground).

ENGINE/EXHAUST TREATMENT

Get the valves replaced with stainless steel ones and get the pistons/cylinders ceramic-treated ASAP when you have successfully converted and run your new creation. Do not delay as these items will rust, either by sheer use or by neglect (i.e. letting it sit). You could make max use of your current exhaust system by using it with your new deal until it rusts through, then have your mechanic or welder friend to fit a stainless-steel exhaust pipe (no catalytic converter is required). But it could be easier and cheaper to send your existing exhaust system out for the ceramic treatment, and then simply re-attach it to the exhaust ports.

GENERAL

Do not discard or remove any of the old gasoline setup components, e.g. tank, carb/FI, catalytic converter, unless necessary. Better to always leave an easy way to revert back to something that at least runs, just in case. Some people are leaving their gasoline setup completely intact, and switching back and forth at will, just to have a backup plan.

Set your throttle circuit so that you get minimum vapor flow at idle, and maximum vapor flow at full power without blowing the pressure relief valve. In this way, you control how 'lean' your mixture is by the strength of the pulse (i.e. “fatness” at the optimum pulse frequency).

If you just don't get enough power (at any throttle setting), it means that you need to (1) change the pulse frequency, (2) change the gap between the electrodes, (3) change the size (bigger) electrodes, or (4) make a higher output pulse voltage (last resort). Always use an output transistor, such as a MOSFET, that is rated for the voltage and current you need to get the job done. OK so you might have to play around with it some. Isn't that where all the Fun is anyhow?

If you get any engine knock out loud combustions (not compensated by adjusting the timing), it means that you need to install an additional coil in the chamber and drive the coil with an additional pulse signal (about 19 Hz on the .1sec time base (see diagram). Here, you will be slowing down the burn rate just enough so that the vapors burn thru out the power stroke of the piston. Be sure to include a board-mount POT to set the correct strength of this 2nd pulse signal into the coil. This is a stainless-steel coil of about 1500 turns (thin wire) that you can arrange like a donut around the center pipe (but NOT touching either electrode), directly over the circular 1-5mm gap. You want no knocking at any power/throttle setting; smooth power only, but also no excess hydrogen leftover from the combustion.

Build the canister(s) as tall as you can without compromising your ability to mount them conveniently near the dash panel, or in the engine compartment, as the case may be. This way, you can always make the electrodes bigger, if necessary, without undue hardship. Remember that anything in the engine compartment should be mounted in a bullet-proof, vibration and temperature tolerant fashion.

If you have to drill a thru-hole for wiring or plumbing thru metal, make sure to also install a grommet for protection against chafing. Always watch your chamber pressure range from IDLE (15-25 psi) - FULL POWER (30-60 psi). Set your safety-pressure relief-valve to 75 psi and make sure it's rated for much higher.
Shut OFF the power switch and pull over if there is any malfunction of the system. Your engine will last longest when it still develops FULL POWER+ at some minimum temperature that we are sure you can find, by leaning back the Royal Vapor Flow and/or by making use of the water-vapor cooling technique (see diagram). Keep good mpg performance records, and periodic maintenance/inspection. Keep it clean; save some money; clean the air; heal the planet; happy motoring; tell a friend; enjoy your freedom and self-empowerment.

There lacks documented material for perfecting this vapor system thru a fuel injector; there may be some details you will discover on your own as working prototypes progress. For example, you may be restricted to inject the hydrogen/oxygen vapor without any water vapor, as it may rust the injectors. If engine temp and CHT is a problem, then you will want to re-think your plan, e.g. ceramic coating the injectors. There is always “replacing the FI system with a Carb.”

If you install the water-vapor system (for lower operating temp/stress), you will want to lean the mixture (vapor/air) for minimum vapor flow rate to achieve any given throttle position (idle - max). Make sure that you get a minimum flow for IDLE and a modestly sufficient flow for MAX, that does the cooling job without killing the combustion.

If you cannot find stainless steel pipe combinations that yield the 1-5mm gap, you can always regress back to alternating plates of +/- electrodes.

If you are concerned about the water freezing in your system, you can
(a) add some 98% isopropyl alcohol and re-adjust the pulse frequency accordingly; or
(b) install some electric heating coils.

REFERENCES

Stephen Chambers 'Apparatus for Producing Orthohydrogen and/or Parahydrogen'
US Patent 6,126,794,

Stanley Meyer 'Method for the Production of a Fuel Gas' US Patent 4,936,961,

CONVERT YOUR ENGINE TO BURN HYDROGEN AND OXYGEN VAPOR FROM WATER....... ON DEMAND + POLLUTION-FREE

FIGURE 1

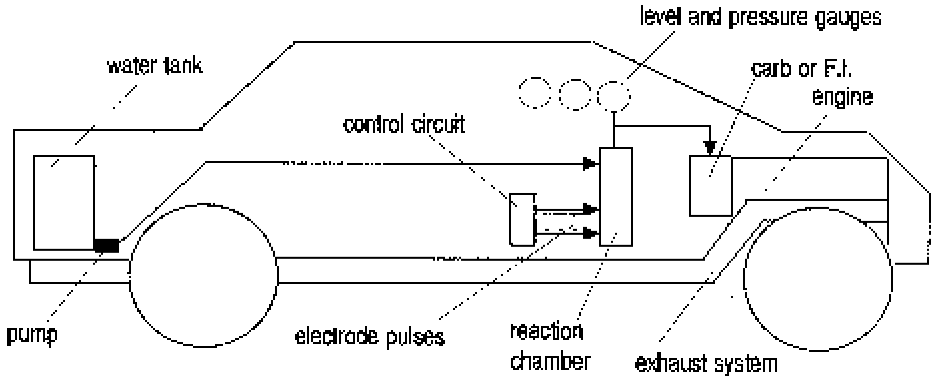

BUILD YOUR OWN WATER VAPOR SYSTEM CONTROLLER FROM THE-SHELF MATERIALS

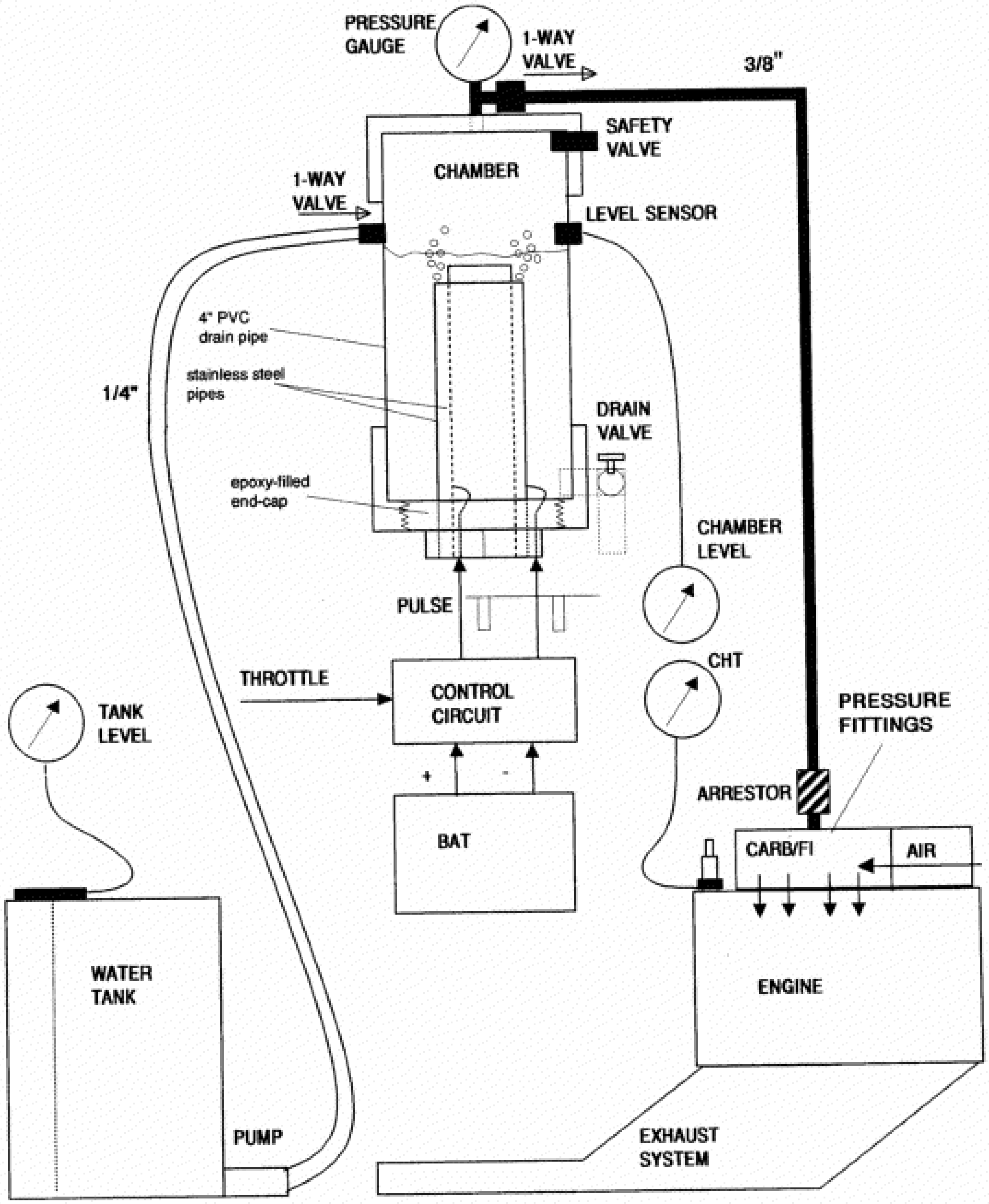

FIGURE 2 BLOC DIAGRAM

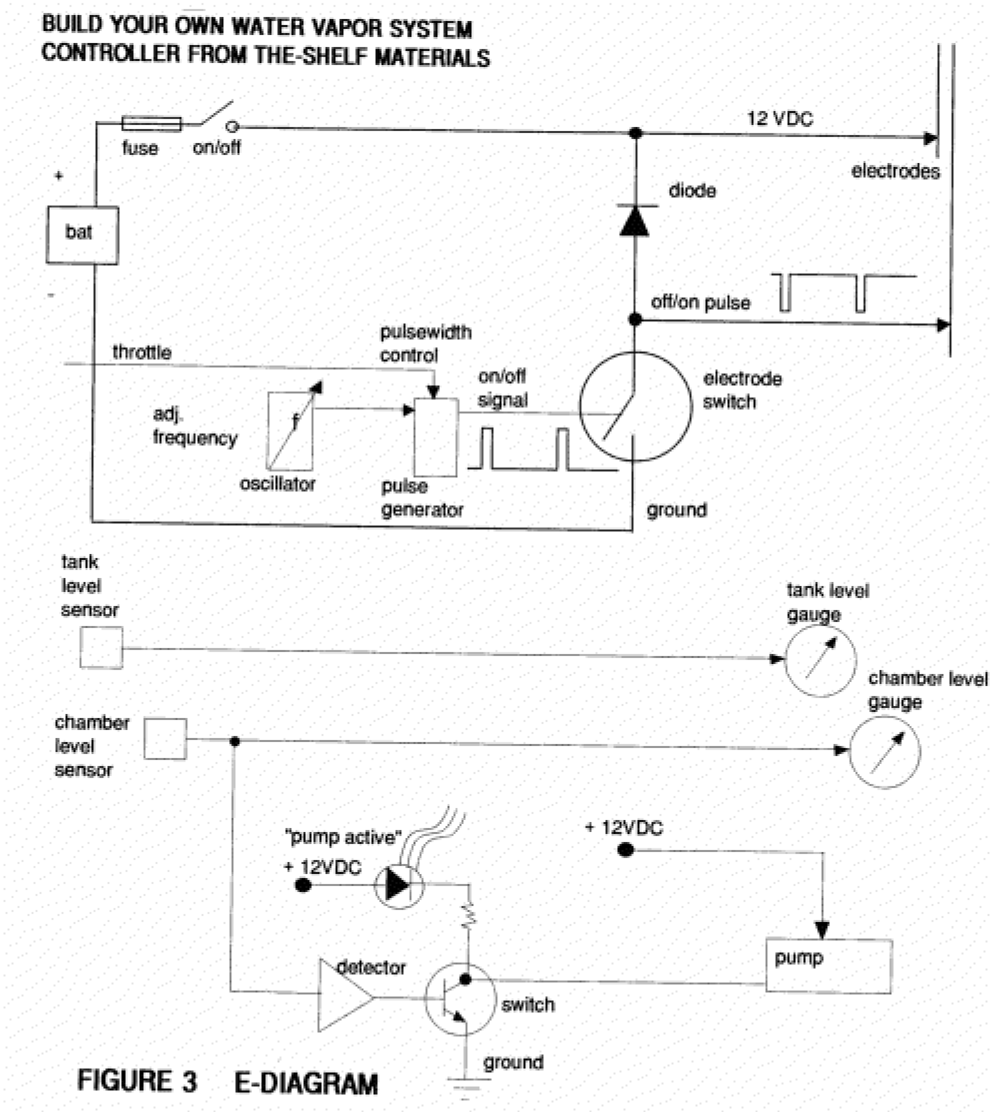

BUILD YOUR OWN WATER VAPOR SYSTEM CONTROLLER FROM THE-SHELF MATERIALS

FIGURE 3 E-DIAGRAM

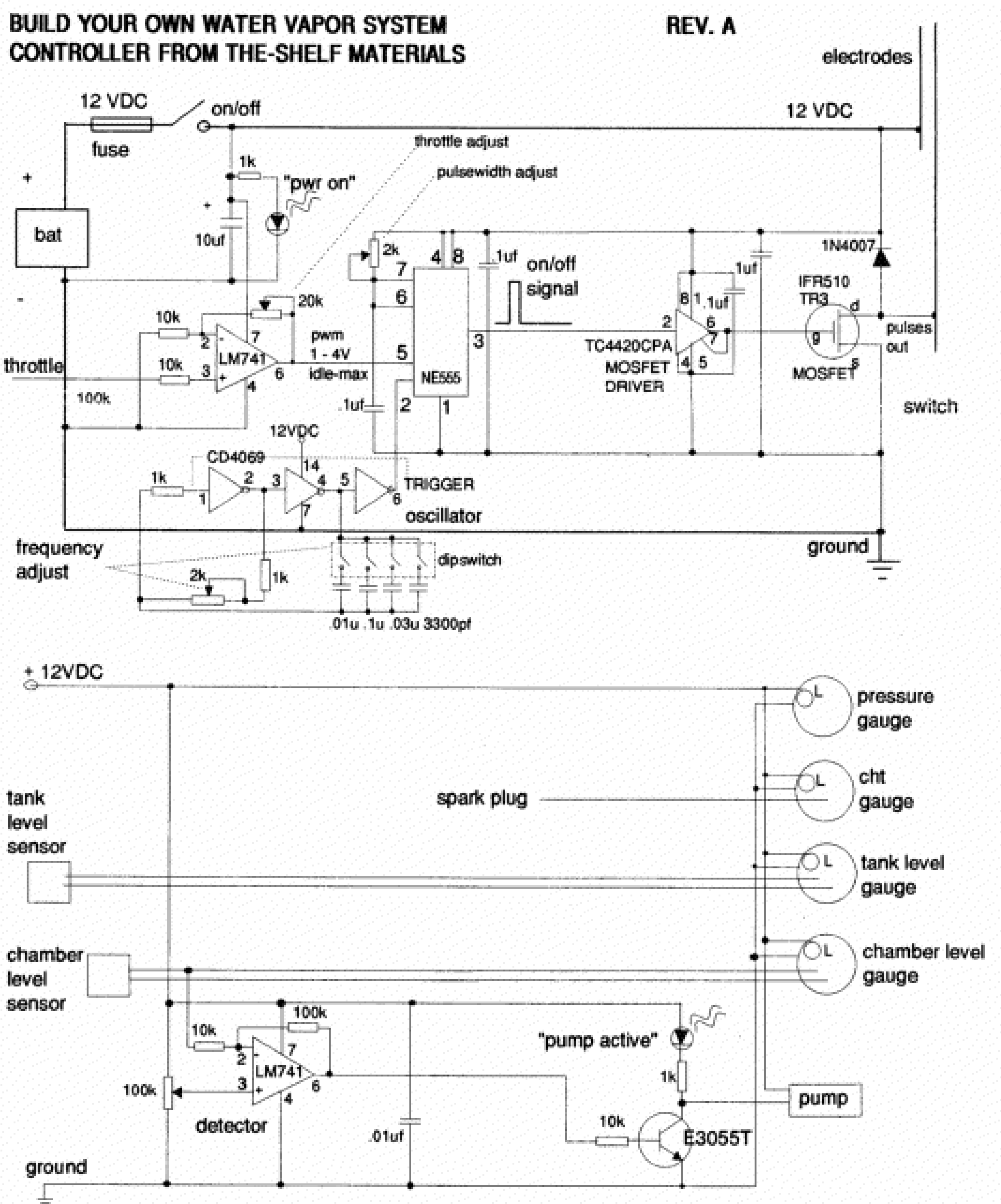

FIGURE 4 E-SCHEMATIC

BUILD YOUR OWN WATER VAPOR SYSTEM
CONTROLLER FROM THE-SHELF MATERIALS

REV. A

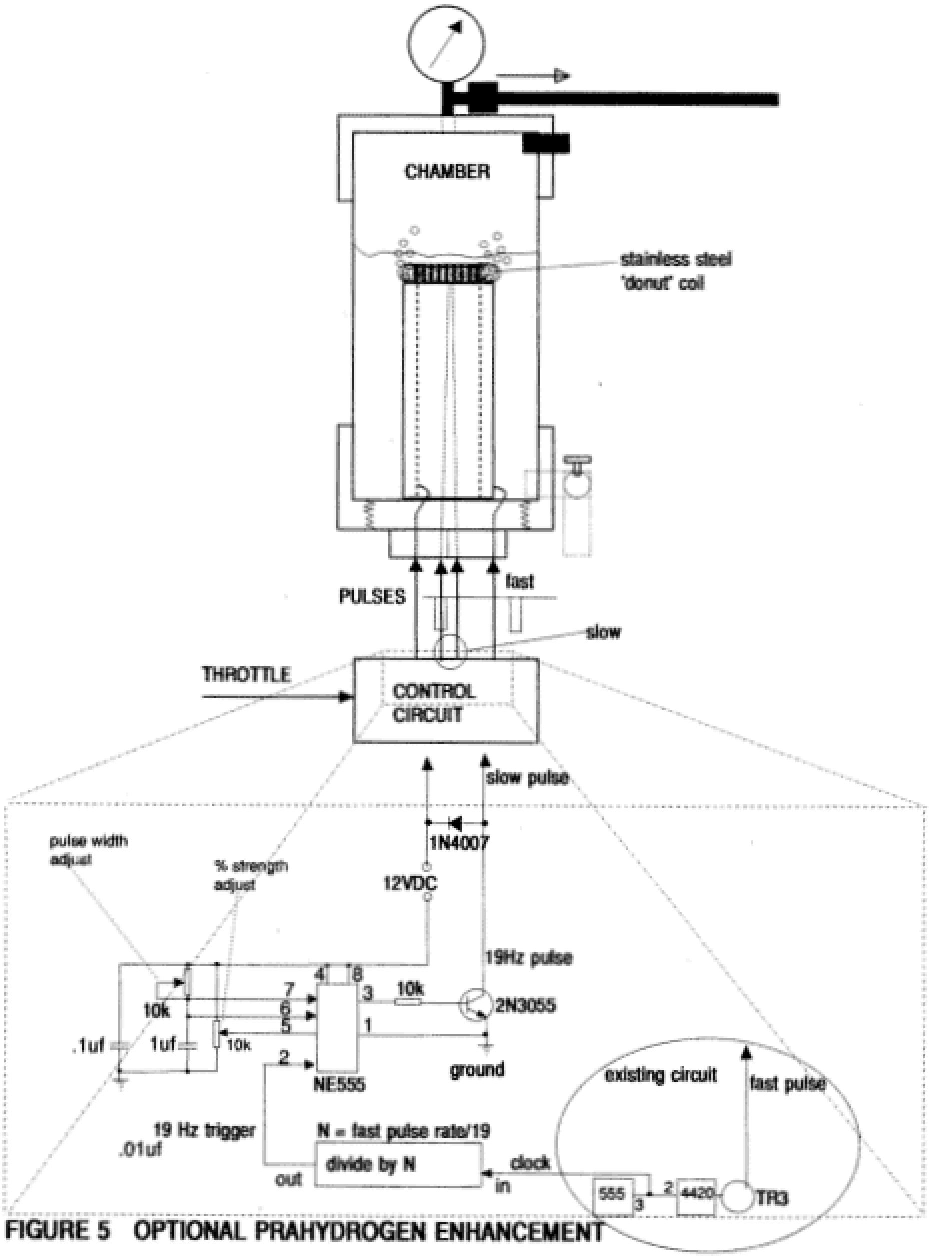

FIGURE 5 OPTIONAL PRAHYDROGEN ENHANCEMENT

BUILD YOUR OWN WATER VAPOR SYSTEM
CONTROLLER FROM THE-SHELF MATERIALS

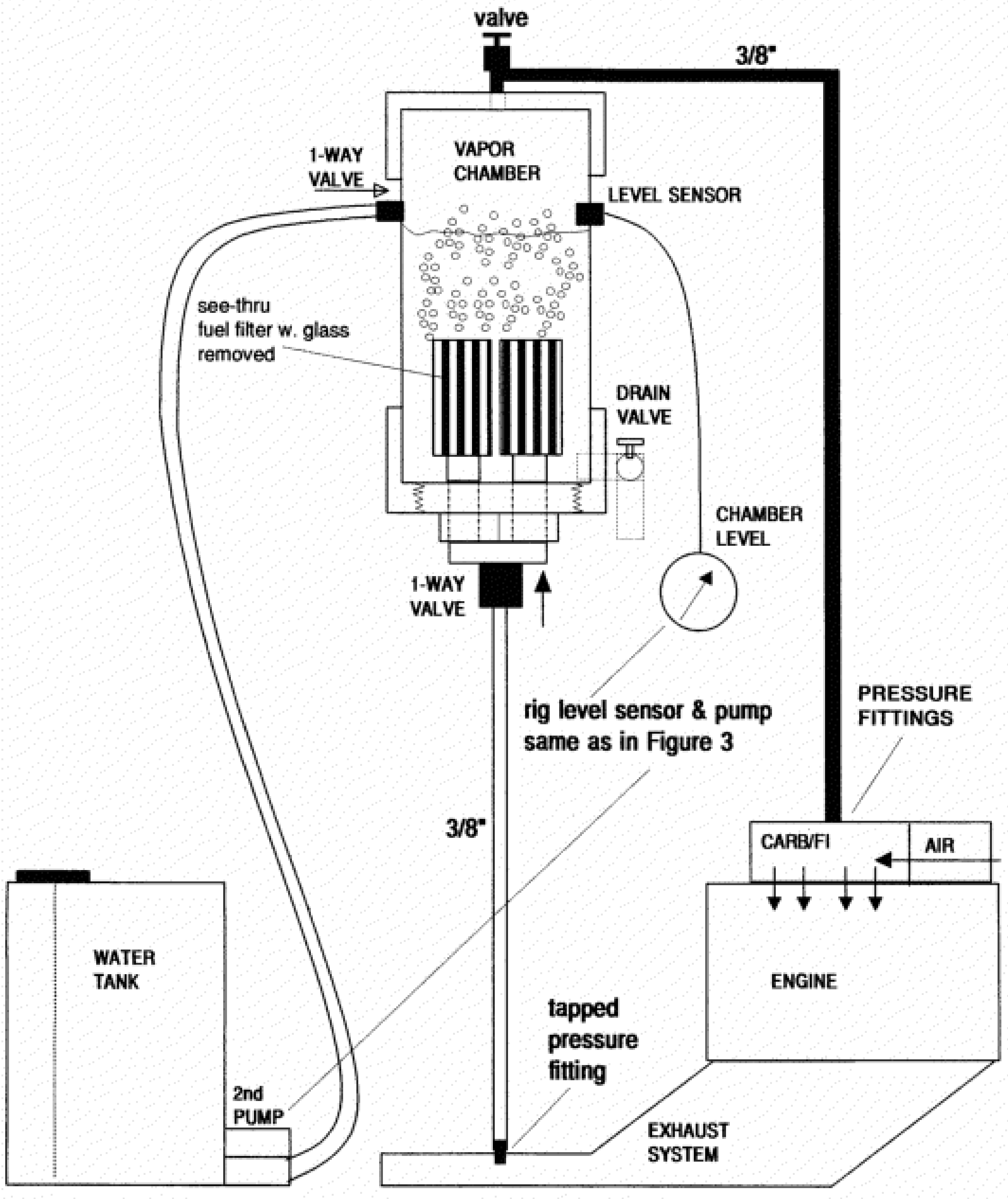

FIGURE 6 OPTIONAL WATER COOLING

2.2.0.7. Version # 2: from Carl Cella;
FUEL FOR FREE- Hydrogen Generator:

Written by Carl Cella P.O. Box 8101 (4176-X), San Luis Obispo, Calif. 93409 0001

Ich halte diese Info für interessant, konnten es aber nicht nachbauen, wenn Sie es nachbauen konnten auf Grund dieser Info oder sonstwie, dann teilen Sie es mir bitte zwecks Veröffentlichung mit. alfred@klaar.at

(What nobody doesn't tell you) > meinte Herr Carl Cella

I am the madman behind the heavy metal band "Rampage," but long before my musical success, I was mechanically inclined, and the possibility of feasibly running a car on fuel extracted from water intrigued me to no end. After reading all the information I could find on the subject of hydrogen generators, I built my first actual unit in 1983, mounting it in the trunk of a 1979 Cadillac Coupe de Ville. You don't have to worry about gas mileage, because gross vehicle weight is of no concern when the fuel, you're using is free! I constructed my system from the best of all the other systems I read about, then went even further to also use the strongest materials, and cleanest layout possible within reason.

All the titanium nuts and bolts were scored from an aircraft salvage supply; they're cheaper used, and since they'll never wear out, that's a way to save some big bucks. Certain head and exhaust system modifications have to be made to expect trouble-free extended use. For one, the combustion of hydrogen results in the rebounding of the previously separated hydrogen and oxygen molecules, making the engine's exhaust water vapor steam, and nothing else, meaning absolutely no pollution at all! Most auto makers use cast-iron exhaust manifolds and steel valves.

The combined effects of heat and moisture (moisture not being present in the combustion of petroleum-based fuels) cause extremely rapid corrosion of the system. Part of the fix is to install stainless steel valves, and an exhaust system constructed entirely out of stainless steel. Racing shops sell stainless steel valves, stainless steel "turbo" mufflers that all work fine. Since hydrogen does not contain lead as some gasoline does, if you're not using a late-model, no-lead engine, the heads will have to be reworked to include valve seats not needing the lubrication lead provides. As for building this device to sell as a completed system, that's a dead issue. In 1983, I contacted the Department of Energy to show them my car actually worked; I was confronted by two very belligerent "agents of tyrannical oppression," who told me if I tried to sell prebuilt units, I'd have a lot of "problems." I asked why, demanding a fuckin' explanation, and was told very bluntly, and not in a very nice tone: "Do you have any idea what a device like this available to the public would do to the economy?" It all boils down to big money; oil company revenues, and gasoline taxes. The world oil supply is very regulated, and profitable to make as scarce as possible to keep prices high. How can they stop or control rain? "They" can't, and since water is free, "they" can't make any money off it. This technology is so simple, that anyone with over half a brain, and knowledgeable in auto mechanics can build one of these units. I've included comprehensive, no bullshit, drafted design layouts, parts lists, maintenance tips, and a whole lot of engine modification concepts to make construction, part fabrication, and implementation as easy as reasonably possible. The unit I built works as great as I claim it to, but I offer only the printed information on how to build your own, and I take no personal responsibility for damage of any kind caused to your vehicle, or self by your own stupidity if you just happen to be some kind of airhead that can't read plain fuckin' English, or comprehend technical instructions no matter how simple they are explained.

I have only applied my unit to a carbureted engine; I have never attempted an application to a fuel injected engine, nor do I make any such claim that an application of that type is easily performed, if possible, at all.

EVERY CUBIC FOOT OF WATER CONTAINS ABOUT 1,376 CUBIC FEET OF HYDROGEN GAS AND 680 CUBIC FEET OF OXYGEN. Because there is no pollution produced, all smog devices may legally be completely removed, and your car exempted from smog checks, as are propane-powered vehicles. The only maintenance I've encountered is to periodically wire brush mineral deposits off of the reaction chamber electrodes, and at longer intervals, clean out the chamber itself; neither of which is complicated, nor very time-consuming. I've incorporated so many backup electrodes, so this job won't be required roadside as it was for me when I first used only one, not knowing about any deposits covering the entire electrode, thus halting the electrical reaction process.

When the car dies out, just flip another switch, and so on until you're somewhere able to brush the reactor's electrodes clean in reasonable comfort; and not northbound on Highway 5, half-way between Los Angeles and San Francisco where my first breakdown was. Where the steel gasoline tank used to be, a plastic water tank is fitted, along with an electric float sensor that will be attached to the vehicle's existing fuel gauge. If you were to start your engine with no modifications other than the carburetor to accept hydrogen fuel, it will run fine, but the exhaust system will rapidly corrode in almost no time, and if you leave the engine turned off for an "extended period," your stock valves and guides will rust up and seize! Stainless steel valves don't cost much, and are as trouble free as the stainless-steel exhaust system; so don't be a fool, and try to go cheap, because you'll only cause yourself added expense, headaches, and you'll be cursing me for your own stupidity.

For the cast-iron combustion chambers and valve ports, there is a high-temperature ceramic coating call "heanium" that can be performed to guard against the same corrosion that affects the valves, guides, and exhaust system. Also, intake manifold; moisture down there too will cause corrosion. Petroleum-based fuels have their own detergent action that protects against corrosion, much like soaking parts in oil prevents corrosion. When using hydrogen as an internal combustion engine fuel, extra precautions must be taken to make extended operation a reality, and not some drive-a-few-thousand-miles between-fried-engines bullshit. Don't use seawater!!! It contains approximately three fourths of a pound of salt in every gallon; a material that will coat the electrodes very quickly, just making one big mess. The reason for electrode deposit build-up is that tap water is never 100% percent pure, it contains mineral contaminants that are drawn to the reaction chamber electrode during the electrically activated molecular separation process that results in the hydrogen contained in water to be released from the oxygen molecules they are bonded to; making a fuel that can power an internal combustion engine.

The two most abundant elements in the universe are hydrogen and stupidity; hydrogen can easily be produced in a controllable form from water; and stupidity will either misapply it when exposed to the technology behind it, or just plain keep it suppressed out of easily-seen public view for personal gain by pushing upon people who don't know otherwise, the costly, and environmentally deteriorative auto fuel gasoline, that the readily-available supply of can be controlled by money-hungry parasites out for every last cent they can pillage from an unsuspecting planet of uninformed "consumers, " who if otherwise knew how simple hydrogen generation is, would not buy gasoline!!!

The two biggest money-makers on earth are the electric and oil companies. Electricity can be generated by engine-powered devices, and those engines can be fueled by hydrogen, so if the extracting process came from a generator (a car's alternator) powered by the engine, and a constant supply of water was available--possibly condensing the almost-perpetually-operating machine; but not fully perpetual, because some energy escapes as heat, though its efficiency would still be very high; and since the fuel needed is free to begin with, who'd complain?

I offer no design for an exhaust steam condenser, but I do suggest one can be built applicable to an automobile to increase the cost-free mileage even further between "fill-ups." A concept (would include some form of exhaust-fed radiator that could incorporate air ducts leading from scoops to direct highway speed airflow across it. I offer the idea, but no design because may aspects must be considered, such as: least amount of back pressure, unit pressure; unit placement with regard to configuration by the limit or abundance of that space, though this would be one constructed for a stationary, engine-powered electrical generator, where space limitation is of no concern. Back to the bottom line of my device, which is able to fuel a car from water you can get for free? Sure, the cylinder walls are cast iron, and prone to rust, but those are kept clean by piston action (as long as it's not left sitting for long periods between use), though an entire engine built from stainless steel would be the hot ticket; don't hold your breath waiting for the big guys to offer anything that will make hydrogen-powered cars readily available.

They're making money on gasoline, you can't rely on them, remember that! Am I making sense? Is there anybody home? Turn off the TV. (which is mostly lies anyway...do you like being lied to or what?), raise up off the couch, pop a few no-doz and get to work!!! How much do you spend a year on gasoline? I don't know about you, but I'd rather buy food! An automobile engine could feasibly be constructed with no corrosive stainless-steel heads and cylinders straight from the factory; a solid reason to justify spending 25 grand or more for a car, because the fuel to run it would be free, and these modification wouldn't have to be "modifications." Factory-built or not, as long as rain exists on this planet, and I'm alive to see it, I'm driving for free!!! There has been much criticism over hydrogen as an auto fuel. Most of it coming as propaganda-filled lies straight from those who have the most to lose if hydrogen ever achieves widespread use as an automotive fuel...proponents of the oil companies! Then of course, there are the few stupid idiots who have simply just ignored all common sense, thinking they're an exception, not replacing their engine's stock regular steel valves (and cast-iron guides) with stainless steel valves, and bronze valve guides. These fuckin' airheads cause their engine's top end to seize out of total ignorance. They try to go cheap, then blame the concept of hydrogen auto fuel as the reason; spreading lies about this great and simple technology. Wouldn't you spend between one and three thousand dollars (to do it right) on a complete conversion of your car's fuel system, if that were a one-time "investment," resulting in the end of buying gasoline ever again for that vehicle? There are some factory-built high performance cars on the market that already come with stainless steel valves, but they are few and far between, and you still have to change the exhaust systems.

For the carburetor to accept a vapor state fuel, it must be converted using the same parts that are used in propane/ butane engine fuel systems; such as carburetor kits by "IMPCO" or similar that do the same thing (enable your engine to be powered by a vapor-state fuel). Because no pollution is produced, the engine may "legally" be rebuilt with higher performance parts, like a camshaft that on gasoline would have increased exhaust pollutant emissions; thus, making it "illegal" for highway use. Of course, it's only a "crime" if you get "caught," but those "pay-again-every-time-your vehicle-fails-smog-checks" are a pain in the ass not to mention the wallet.

You see the bottom line, don't you? Money, lots of it! With hydrogen powering everybody's car, who would have the most to lose? Big fuckin'-brother, that's who. No more gasoline taxes, smog certification fees, failure-to-comply-fines for disconnected "smog" devices, extra charges for those devices on the car's purchase price, gas stations on every corner, smog alerts, ozone depletion, or being stranded roadside at midnight, miles from anywhere, during a rainstorm, out of gas!!! A similar type of mechanism that opens and closes retractable headlights could be implemented in a dash switch-activated system that could open a trunk lid mounted scoop that captures rain, with a flexible hose line that directs it into the main tank; either while the vehicle is in motion, or parked. Just watch the fuel gauge and close the scoop when you see "full"!

While it may be a long time before we are able to purchase an entirely corrosion resistant, exotic-alloy engine, (factory-done to reasonably compensate for the effects of a water-derived fuel on an internal combustion engine) I am offering the fully-complete design for a hydrogen generator that will power a car--but any engine modifications I outline are only given as basic concepts. It's up to you to implement what is applicable to your particular engine. Use some initiative. Don't rely on whether I wrote it or not; if you discover a part, or a process that I haven't mentioned that will in any way protect your engine further from the effects of corrosion, use it!!! I've written this booklet to help people wake up from the big lie of having to depend on oil companies just to drive a car. If a city's busses were powered by hydrogen, they would have no grounds to charge a buck or more for fare, citing "rising fuel costs" as a factor.

In case you're wondering, "Why, if this works, isn't it being used by a lot of people?" There's no money to be made by the oil companies, stupid, I already told you; big money corrupts small minds. And then we have our society filled with just plain assholes who seem to only be here for the purpose of being nemeses for everybody creative...by saying things like: "Oh, I don't believe that," or "That doesn't really work, it's just a hoax. I saw a guy on TV that showed how that stuff burns up engines," or "How come we never hear about it if it really works?"... All the stupid fuckin idiots who have been brainwashed all their lives to believe everything they see on television as the undisputed truth!!! I drove my car down to the Los Angeles office of the Charnel Seven Eyewitness News to show them a car that actually works, telling them if they run stories on the negative mistakes people have made in attempting construction of a hydrogen- powered car, why not run a story on a car that has all the bugs worked out, that actually functions! All I got was double-talk about "people just don't care about hearing this type of stuff." Television is a major force behind the big-lie, mass-scale, public brainwashing. Government wants people to believe that everything has to cost money. Not only are they worried about losing money on hydrogen- powered transportation vehicles, they have a major concern over hydrogen-powered engines that could be used to run electricity generators for everybody's homes. The water company would be the only public utility (outside of telephones, of course) in mass demand. Collecting rain in a yard full of used 55-gallon oil drums for use as auto fuel would even cut that demand down even further!!! Building as many units as I can for personal use only, and writing this booklet, are about the only things I can "legally" do to try to help the world wake up. A hydrogen generator produces an energy potential in excess of 100 percent efficiency!!! You read it right; free energy! A car's battery starts the engine, but once it's running, the alternator takes over to charge the battery, and power the ignition system. With an onboard hydrogen generator, that alternator also powers the hydrogen extraction process, producing the energy needed to fuel the engine that runs the alternator. No external power source is needed, so as long as there is water available, the entire system is self- sufficient in operation. An extra trunk mounted battery would provide more current--if ever needed--to run everything at once without overloading the electrical system; ignition, hydrogen generator, lights, air conditioning, and your megawatt, ultra-powerful, mini- amp, stereo system that blasts "Rampage" tapes everywhere you go!!!

Make photocopies of this booklet for everyone you know to see and make use of the information it contains. The world is only a fucked-up place because "we the people" who inhabit it either make it that way or do nothing to at least try to improve it. Water is the ultimate "renewable resource;" it'll never run out!

THE NEXT STEP

System operation: The dash-mounted switches for turning on the reactor are also wired to activate the chamber feed water pump at the same time. When the car dies out, that signals to you that an electrode has been totally crusted over with deposits from the impure fuel water. This means the electrically activated molecular separation process (electrolysis) has halted. These switches should also have indicator lights to let you know which one is on, and flip-up caps to guard against accidental activation. When the need arises to go to backup, turn off the switch for the "dead" electrode, as well as close its electrical shut-off valve. The purpose of these gas valves is to keep pressurized oxygen from escaping up through the "off "electrode fittings into the hydrogen lines possibly resulting in your car becoming a "Highway Hindenburg!" Hydrogen is separated from its molecular bond with oxygen by exposing the fluid of water to direct current voltage.

Hydrogen is attracted to a negative charge, while oxygen is attracted to a positive charge, this process generates heat in the chamber, so trunk placement is best with an aluminum or plywood wall built between the reactor and the rest of the available trunk space. Small cars are light on gasoline, thus cheaper to operate, but when all of a sudden, the fuel becomes free, the size and weight of the car is of no concern, except for Porsche, and similar sports cars, street rods, etc. Who the hell likes being crammed like a sardine in a rolling tin coffin? Agility may be sacrificed for those into quick cars, but Cadillac’s will do 130 MPH for extremely long distances; try that in a Yugo and chances are you'll be in hell before I will!

Water is pumped through the reaction chamber and the chamber itself is positively charged, drawing the oxygen molecules out through the water return line to be vented off through the water tank's cap. The hydrogen-attracting electrode extending (insulated under the "T" fitting) into the welded-in pipes is negatively charged. There is a dash-mounted pressure gauge that is connected before the regulator and mixer. To begin hydrogen generation, flip one of the dash-mounted switches, and wait for the gauge to show fuel line pressure, then, start, engine when pressure is shown by the gauge to exist. In mounting the unit, remember that the chamber itself is positive and most cars use a negative chassis ground, so insulated mounts must be fabricated between the positive chamber, and the negative trunk floor.

Final Note: This unit is not a concept or a theory! It is tried and proven. I designed this system at age 18 in 1983 and built more than one using "Rampage" profits for research and development. I can't sell actual working units, but nothing but death itself can stop me from distributing this booklet in the hopes that people will take initiative to wake up from the big lie of oil-dependency for auto fuel, and flood the street with hydrogen-powered cars, If enough people find out how simple it is, public pressure may someday soon be put on the government, resulting in the long overdue media exposure they're all so afraid of. Eyewitness news in L.A. didn't want to let the word out that an actual working vehicle had been built by an 18-year-old metal head! We're supposed to be stupid in the public's eye from their point of view and that just fucking sucks!

Hydrogen and Oxygen gases do not pollute and help to clean out the carbon deposits from the engine for better mileage and less engine wear. You will notice the improved engine performance immediately.

You will find IMPCO now: http://www.impco.ws/

	**Garage and junkyard** **New Science original--BETTER plans** **Operating System photos** **Other water fuel systems** **Fancy tech**

2.) Diverse Informationen und Verfahren zur Herstellung von Wasserstoff, Knallgas und zur Energie Einsparung

Unfortunately, several of this bellow listed inventors had one thing in common, they are rapid deceased after the invention was published and I ask you, is this comprehensible?

Ich bin überzeugt, daß jedes der nachfolgend dargestellten Verfahren > Patente erfolgversprechend ist, die Reihung der Patente stellt keineswegs irgendein Qualitätsmerkmal oder gar eine Bewertung der jeweiligen Patenschrift (Verfahrens) dar.

3.0.0.1. John Worrell Keely (1837-1898) der Pionier

Andrija Puharich found that water, when bubbled at a current of 600 cycles per second, had the highest efficiency of disruption to the gaseous state.

For comparison: John Keely stated that water could be disrupted at 610, 620 and 12'000 cps...with the most effective frequency being 42.8 kHz.
Up to our knowledge, and in our mind, he was, from today’s sight, the greatest ancient times pioneer in this technical field.

Mr. Keely was the pioneer in breaking down water into hydrogen and oxygen without heat or ordinary electricity. He, so it is reported, performed feats which 21st-century science is unable to duplicate.

He worked with sound and other vibrations to set machines into motion. To liberate energy in molecules of water, Mr. Keely poured a quart of water into a cylinder where tuning forks vibrated at the exact frequency to liberate the energy. Does this mean he broke apart the water molecules and liberated hydrogen, or did he free a more primal form of energy?

The records which could answer such questions are lost. However, a century later, Keely is being vindicated. One scientist recently discovered that Keely was correct in predicting the exact frequency which would burst apart a water molecule. Keely understood that atoms to be intricate vibratory phenomena.

From the “Scientific American”, March 25, 1884, p. 196. is the following report:

It was announced from Philadelphia on the 17th of March that the Keely motor was practically completed. All the workmen had been discharged, and Mr. Keely was immediately to begin "focalizing and adjusting the vibrators"—a delicate operation but easy for him—and as soon as he obtained "one perfect revolution, though even so slow," the great invention would be complete. The news called forth several funny paragraphs in the newspapers and quite a flutter among the stock holders and directors, who have been for several years investing money to back up this nineteenth century discoverer of "perpetual motion" It is difficult, indeed, to consider seriously this alleged invention, or justly characterize the inventor, who, in this age, not only assumes to get something out of nothing, but would hide all his methods and processes and affect more than the mystery of the alchemists of the early ages. Yet it is a serious matter to those who have been sinking their money therein. Now, however, we seem at last to have reached the "beginning of the end," and the attention of the investors can, at an early day, be "focalized" on their profit and loss accounts.

THE KEELY MOTOR COMPANY

John Worrell Keely

John Worrell Keely (1837-1898) of Philadelphia was a carpenter and mechanic who announced in 1872 that he had discovered a new principle for power production. The vibrations of a simple tuning fork had given him the idea, and the means to tap etheric energy.

At this time most physicists believed that all of space was filled with an elusive fluid called the "luminiferous ether". Experiments were conducted to measure the properties of this ether, giving negative or confusing results. By the early decades of the 20th century the ether idea faded away. Physicists finally realized that the reason they couldn't detect the ether or measure its properties was simply that it wasn't there. But more importantly, the old reasons they had given for thinking it was there turned out to be resolved by the theory of relativity. Today the luminiferous ether is seldom even mentioned in textbooks.

Keely persuaded a dozen engineers and capitalists to invest in the idea, forming the Keely Motor Company in New York in 1872. Soon he had capital of one million dollars, primarily from wealthy New York and Philadelphia businessmen. He used the money to buy materials necessary for building a motor based on his theories.

Soon he had constructed an etheric generator, which he demonstrated to amazed audiences in 1874 in Philadelphia. Keely blew into a nozzle for half a minute, then poured five gallons of tap water into the same nozzle. After some fine adjustments the pressure gage indicated pressures of 10,000 pounds per square inch. This, said Keely, was evidence that the water had been disintegrated and a mysterious vapor had been liberated in the generator, capable of powering machinery.

One spectator at a Keely demonstration described the power of the machine. "Great ropes were torn apart, iron bars broken in two or twisted out of shape, bullets discharged through twelve-inch planks, by a force which could not be determined."

Keely predicted his discovery would make other forms of power obsolete. A quart of water would be enough to send a train from Philadelphia to San Francisco and back. A gallon would propel a steamship from N. Y. to Liverpool and back. "A bucket of water has enough of this vapor to produce a power sufficient to move the world out of its course."

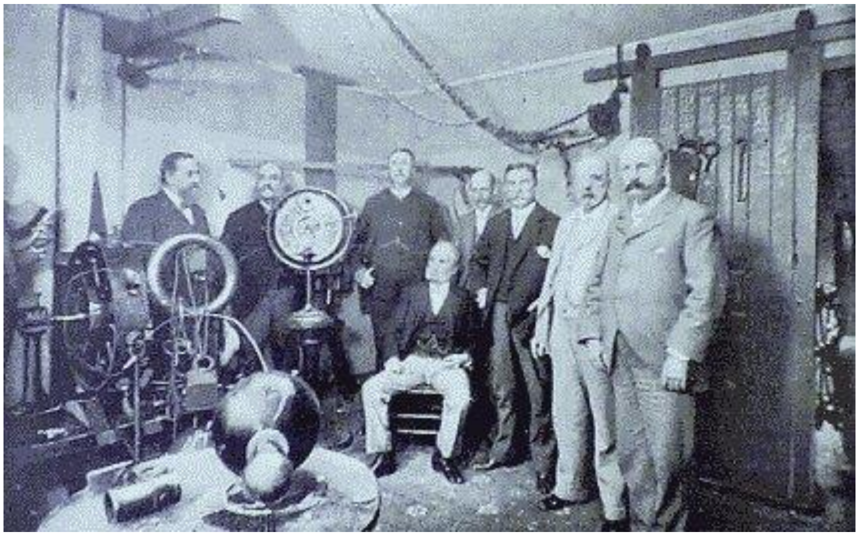

Keely and the board of directors of the Keely Motor Company.

Keely lived in high style, as befitted the head of any large company. To his credit, he plowed most of the invested money into research equipment. He did most of the experimentation himself, constructing his own apparatus. He was not willing to entrust his secret to those who could not or would not understand—especially physicists and engineers. Skeptics noted that the equipment could never be made to work as it was supposed to unless Keely was present.

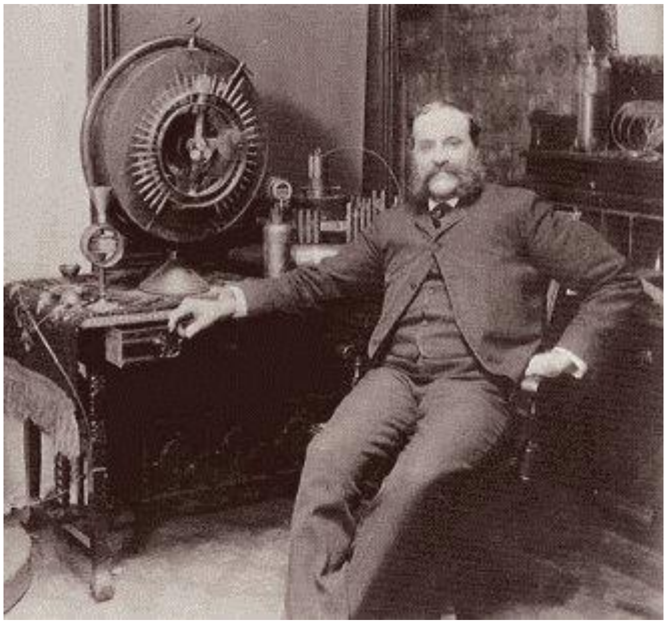
John Worrell Keely photographed in his laboratory in 1889. The Bettmann Archive.

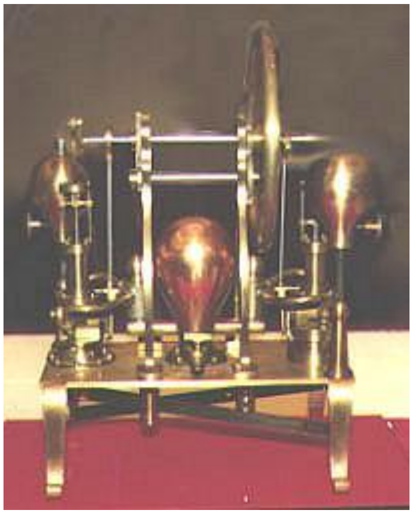
Keely's hydro-vacuo engine.

The work went slowly. To keep up the spirits of stockholders Keely staged public demonstrations. These were masterpieces of showmanship. He demonstrated a marvelous machine, a "vibratory engine" or "hydro-pneumatic pulsating vacuo-engine." It was a work of the machinist's art, made of gleaming brass and copper. The engine was attached to another machine called a "liberator," a complicated array of brass wires, tubes and tuning forks.

Keely explained that he was tapping a "latent force" of nature—the vibratory energy of the ether. [We can blame that idea on the physicists.] Keely often used a harmonica, violin, flute, zither or pitch pipe to activate his machines. Some said that it was worth the price of being duped to hear the eloquent language Keely used to explain his theory. [Keely was said to have considerable musical knowledge and talent.]

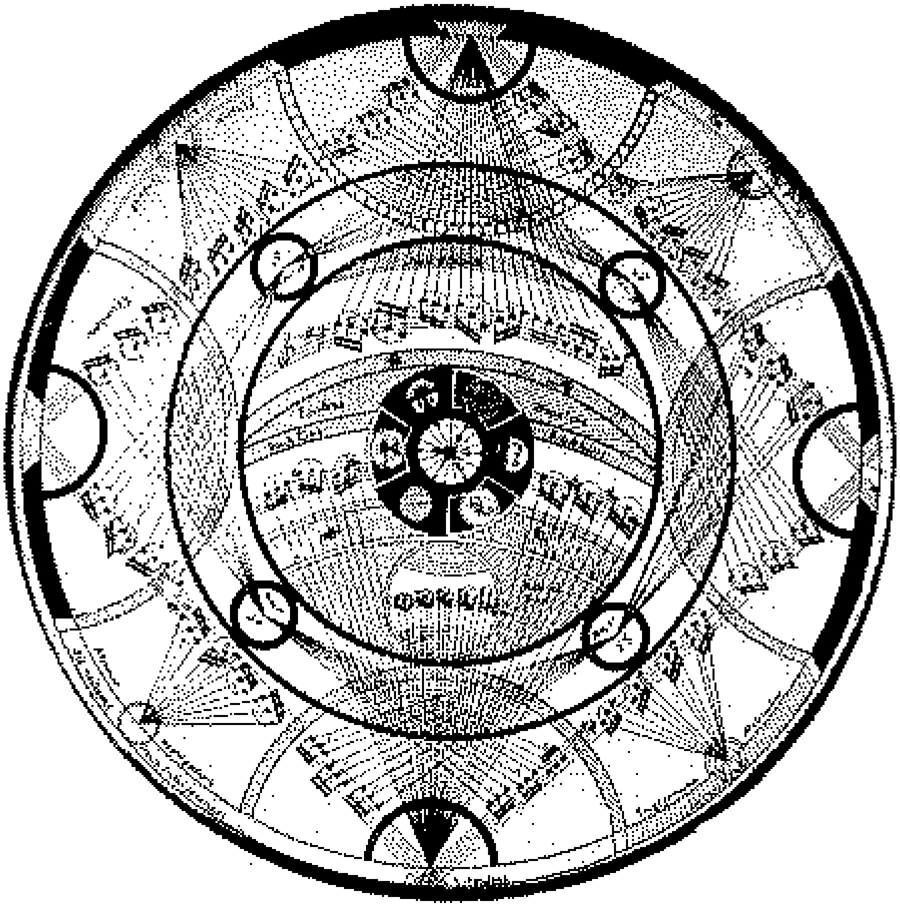

A central idea of Keely's theory of nature was the notion that musical tones could resonate with atoms, or with the ether itself. He even drew this musical chart to help people understand the finer points of this theory. [There are those today who use this as evidence that Keely was far ahead of his time, anticipating the theory of quantum mechanics.]

Biographers have described Keely as a "mechanical experimenter", "inventor and imposter", "professor of perfidy", "swindler", and "scandalous scamp". Keely's lack of formal scientific education didn't bother his supporters and didn't deter Keely himself from grandly proclaiming his theories as "scientific".

Keely expounded his ideas using an elaborate theory of the "etheric force", spiced with eloquently profound terms such as: "sympathetic equilibrium, quadrupole negative harmonics, etheric disintegration". His backers were duly impressed. He looked with condescending pity on those who appeared not to understand.

Some disillusioned stockholders withdrew their support as Keely's experiments suffered repeated delays. Keely declared he'd already proven his theory could be implemented for useful purposes, and he made vast claims for the economic benefits of etheric energy over coal and other energy sources. But he resisted investor's demands that he produce some marketable product. Stockholders were not happy with Keely's insistence that more experimentation was needed to "perfect" the machines. Fortunately, when nearing bankruptcy, Keely acquired a wealthy backer, Mrs. Clara S. J. Bloomfield-Moore, the widow of a Philadelphia paper manufacturer.

With our present knowledge no definition can be given of the latent force, which, possessing all the conditions of attraction and repulsion associated with it, is free of magnetism. If it is a condition of electricity, robbed of all electrical phenomena, or a magnetic force, repellant to the phenomena associated with magnetic development, the only philosophical conclusion I can arrive at is that this indefinable element is the soul of matter. [J. W. Keely.]

She advanced him over $100,000 for expenses and promised him a salary of $2,500 per month. She became active in promoting Keely in journals and books and in seeking scientists who might validate his claims. She suggested that he share his secret with Edison or Tesla to hasten its development, but Keely refused. He did agree that scientists at least be allowed to observe the demonstrations.

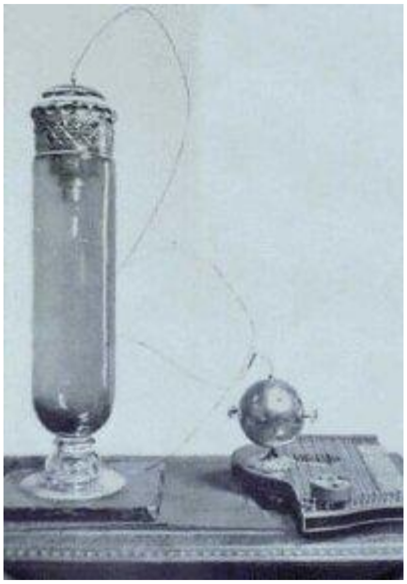

Glass flask containing weights that Keely claimed could be moved up or down by striking the zither strings.

E. Alexander Scott, an electrical engineer, witnessed such a demonstration. When Keely showed him, the etheric power causing a weight to rise and fall in a closed flask of water, Scott was unimpressed. Keely used the sound from a zither to activate the globe liberator which then transmitted the etheric force through a wire to the water container. Scott suspected the weight was hollow, so that the slightest change of water pressure could cause it to rise or fall, just as a Cartesian diver. The wire, he guessed, was a hollow tube transmitting air pressure to the water chamber. To counter this suggestion, Keely cut a ways into the wire with a file to prove it solid. But Moore surreptitiously picked up a scrap piece of similar wire in the workshop and later found that it did have a very fine, hollow center.

Other demonstrations showed the etheric force to be great enough to lift huge weights. It could also fire his "vaporic gun", demonstrated at Sandy Hook, Long Island.

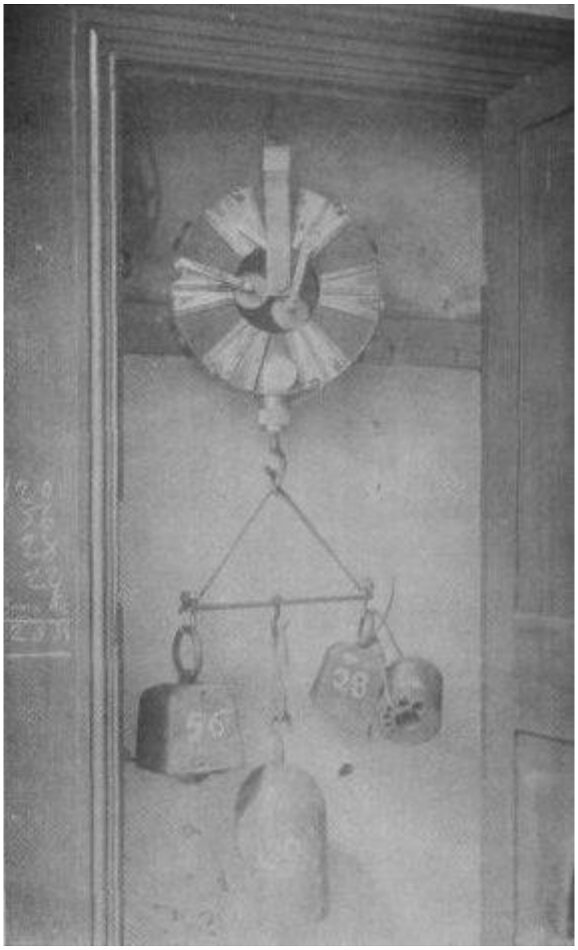

Test of the sympathetic force of vitalized disks.

Keely Nearing the End

It was announced from Philadelphia on the 17th of March that the Keely motor was practically completed. All the workmen had been discharged, and Mr. Keely was immediately to begin "focalizing and adjusting the vibrators"—a delicate operation but easy for him—and as soon as he obtained "one perfect revolution, though even so slow," the great invention would be complete. The news called forth several funny paragraphs in the newspapers and quite a flutter among the stock holders and directors, who have been for several years investing money to back up this nineteenth century discoverer of "perpetual motion" It is difficult, indeed, to consider seriously this alleged invention, or justly characterize the inventor, who, in this age, not only assumes to get something out of nothing, but would hide all his methods and processes and affect more than the mystery of the alchemists of the early ages. Yet it is a serious matter to those who have been sinking their money therein. Now, however, we seem at last to have reached the "beginning of the end," and the attention of the investors can, at an early day, be "focalized" on their profit and loss accounts. [Scientific American, March 25, 1884, p. 196.]

The Scientific American magazine followed Keely's career with some amazement and amusement. They were not impressed, reporting that all the demonstrations they had witnessed could easily have been produced with hidden sources of compressed air.

Keely continued this research for fourteen years, occasionally staging demonstrations to placate impatient stockholders. Mrs. Moore was concerned by Alexander Scott's negative report, and by dismissive and unkind articles in newspapers and magazines. So, she sought a second opinion from physicist Prof. W. Lascelles-Scott, from England. He spent a month in Philadelphia carrying out his investigation, finally reporting to the Franklin Institute that "Keely has demonstrated to me, in a way which is absolutely unquestionable, the existence of a force hitherto unknown."

Since physicist Lascelles-Scott and engineer Alexander Scott obviously disagreed, they were brought together to witness more Keely demonstrations. Mrs. Moore suggested that the definitive test would be to cut that wire that Scott alleged was really an airline. This time Keely flatly refused to comply. Lascelles-Scott retreated to England, and Mrs. Moore, her faith shaken, reduced Keely's salary to $250 per month.

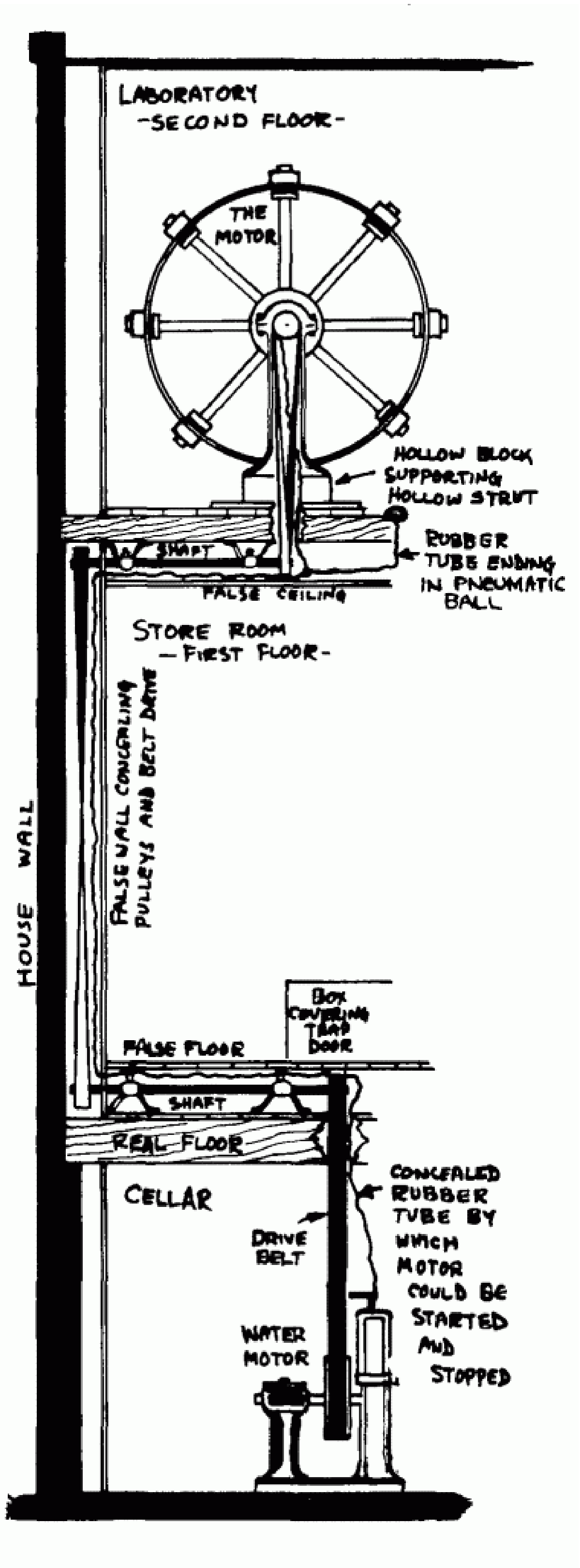

The secrets of Keely's laboratory, published in The New York Journal.

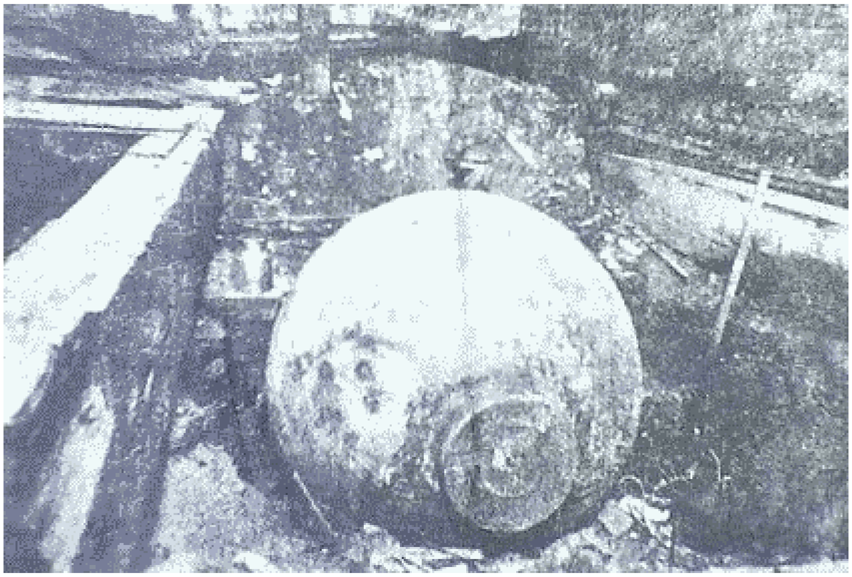

Three-ton sphere found in basement of Keely's laboratory building.

After Keely died on Nov. 18, 1898, suspicious skeptics and newspaper reporters did a careful examination of his laboratory. Some of Keely's machinery had already been removed by "believers" who hoped they could make it work. A Boston electrician, T. Burton Kinraide, removed the engine to his home at Jamaica Plains. Some of the apparatus ended up in England. No one could make it function as it had in Keely's laboratory. The secret was not in the machines; the secret was in the laboratory building itself. Engineer Alexander Scott and Mrs. Moore's son, Clarence, examined the building, accompanied by press and photographers. False ceilings and floors were ripped up to reveal mechanical belts and linkages to a silent water motor in the basement (two floors below the laboratory). A system of pneumatic switches under the floorboards could be used to turn machinery on and off. A three-ton sphere was found in the basement, apparently a reservoir for compressed air. The walls, ceilings and even apparently solid beams were found to have hidden pipework. The evidence of fraud on a grand scale was obvious and undeniable.

> Whatever laws he may have broken in his long career, Keely had left the first and second laws of thermodynamics inviolate. — Stanley W. Angrist, "Perpetual Motion Machines" in Scientific American, Jan 1968.

What's really remarkable is that Mrs. Moore had persuaded a number of apparently respectable scientists to observe Keely's demonstrations, and some of them affirmed that they were impressed, and even convinced that Keely had made revolutionary scientific discoveries. Why were some so easily duped by Keely's obvious (though very elaborate) deceptions, which were correctly guessed by more perceptive and skeptical observers? Of course, it must be stated that Keely never allowed anyone to examine his machines, independently test them, or even look inside of them. Even today, scam artists promoting energy machines can find at least a few degree-holding engineers or physicists willing to declare publicly that they found no fraud or deception in the machines and who are convinced that new scientific principles are at work. So much for "expert witnesses".

Keely had kept his company going for 26 years without ever putting a product on the market, paying a dividend or revealing his secrets. That's his one undisputed accomplishment. He never divulged his secrets with anyone, so far as we know. One close friend reported that he had once asked Keely "John, what do you want for an epitaph?" His answer: "Keely, the greatest humbug of the nineteenth century."

Keely in his office. (Label added.)

The term "humbug" is associated with the American showman Phineas Taylor Barnum (1810-91), who wrote a book "Humbugs of the World" and was renowned for hoodwinking the public with fake and hyped "wonders". Barnum and Keely never met, but they might have been kindred spirits.

The Keely Motor Stuck Again. Keely's first week of solitary confinement with his motor for the purpose of "focalizing and adjusting the vibrators," has resulted, not in the single revolution which is to demonstrate his final triumph, but in another postponement. We learn from one of our contemporaries that the stockholders met in Philadelphia on the 26th and waited with great excitement for a report from Keely. He sent word that the "focalizing" was making rapid progress, that he was too busy to leave it even for a moment, and that they could fix a date for exhibition on or before April 10. Then the stockholders separated, cheerful and hopeful as usual. [Scientific American, April 5, 1884, p. 213.]

Although when new inventions appear it may be necessary to coin appropriate terms, we should not think it essential to resort to heterogeneous comingling of absurdities. [Scientific American, October 11, 1884.]

The Keely affair is generally acknowledged to be one of the most successful scientific hoaxes. Yet even today there are still people who feel that he was "framed," and that his "secret" still remains to be discovered. An Internet site, Keelynet, is devoted to continuing and extending his work, building upon his occult theories of physics and matter.

Keely's theories have been cavalierly updated by such folks to harmonize with their new-age philosophy, and with their shaky understanding of popularized science. They have translated "ether" to "zero-point energy" or "free energy" that they claim fills all of space and may be tapped by anyone clever enough to rediscover Keely's secrets.

Some years ago, I had the opportunity to see and examine a model of Keely's hydro-vacuo engine, part of the collection of the Franklin Institute in Philadelphia. At that time, it was on loan to a private individual (in exchange for a generous gift to the museum). Unfortunately, conditions at this person's home weren't ideal for photography, and this photo was the best I obtained (though the original photo was in 3d.) Trust me, this machine could never have run on its own, without assistance from hidden power sources (compressed air).

There can be little doubt about the fraud. Too many investigators saw the evidence and made sober statements about it. None of the members of Keely Motor Company had anything to gain from making a public exposure—quite the contrary. Clarence Bloomfield-Moore was a distinguished archaeologist and explorer, who had spent twenty years exploring Indian mounds throughout America. His excavations in Keely's laboratory, accompanied by reporters from the Philadelphia press and a staff member of the Scientific American were charted by photographs which leave no room for doubt... Keely was clearly a charlatan much of the time, but there have been great spiritualist mediums who produced genuine phenomena as well as cold-blooded fraud... Keely may have been something more than a trickster on a grand scale. Could he really have spent most of his life on a series of obsessive frauds? [Leslie Shepard, 1972. The comment about "genuine phenomena" of spiritualist mediums is most revealing of Shepard's "willingness to believe".]

Though the press classed Keely's claims with "perpetual motion", Keely himself never claimed that any of his inventions violated physical laws. He very cleverly couched his claims to be consonant with speculative science of his day. He exercised eloquent embellishment of these ideas, and coined marvelous scientific-sounding words, but without ever carefully defining them. He was so good at this that his followers today can point to obscure things Keely said and ingeniously interpret them as anticipating modern atomic theory.

The man with a new idea is a crank, until the idea succeeds. — Mark Twain.

Present-day "seekers" likewise avoid the term "perpetual motion". To account for the energy they hope to produce, they invent mysterious forms of energy "all around us" that have never been discovered, have no effect on most matter, and have no solid foundation in well-established and well-tested science.

The fact that a new idea is ridiculed doesn't increase its likelihood of being eventually found to have merit. Most new ideas, even in science, fail, and are quietly swept under the rug of history. — D. E. S.

They hold "science as we know it" in contempt and see today's science as a strait-jacket restraining those who seek to discover "new scientific principles." These folks devote far more effort to rationalizing their methods, justifying their unproven claims, and inventing new paradigms than they spend producing testable results.

It is not pathological to admit that science is never complete, and that new discoveries will be made and will at least modify some of our present understanding. However, it is just a bit perverse to justify one's scientific thinking and base it upon the vague and incomprehensible invented pseudoscientific theories and experimental deceptions of a 19th century charlatan such as Keely. Keely may have been a clever con artist, or he may have been a diligent but misguided seeker of scientific truth who only fabricated deceptions to gain support. He may have been both. Whatever may be the case, I confidently predict that if new sources of energy are ever discovered, they will have not the slightest connection with anything Keely ever did or imagined. Present-day followers and admirers of Keely are wasting their time and will simply get nowhere as they try to implement his ideas to produce an energy generator.

3.0.0.2. Das Daniel Dingel Verfahren

Niemand weiß genau wie es wirklich funktionierte ....

"Meine Erfindung ist so simpel, daß jeder nur lachen würde, wenn ich sie veröffentlichen würde, sie beruht nur auf gesundem Menschenverstand, und nicht auf innovativem Ingenieurwissen." So sprach Herr Dingel und meldete sein Verfahren beim US Patentamt bereits im Jahre 2004 unter der Zahl: 2004/0202905 A1, an und seither geschah nichts, zumindest nichts das der Öffentlichkeit zugänglich ist. (..........man vermutet es wurde daraus ein US Geheimpatent!).

Ich stelle dieses Verfahren an erster Stelle weil ich nicht in der Lage bin dieses Verfahren zweifelsfrei in ein Thermolyse- oder in ein Elektrolyse- Plasmaverfahren oder sonst ein Verfahren einzuordnen, sicher scheint nur eines zu sein, das Verfahren funktioniert, zu viele Personen sahen es und bestätigten die Tatsache der Funktion.

Da Herr Dingel sich mit nahezu allen Details bedeckt hielt, will ich nicht in den Chor der Mutmaßungen (Dingels Deuteriums Technik?) mit einstimmen, wir wissen einfach zuwenig über dieses Verfahren. Und das ist schade. Tieferstehend aber doch einige Bilder die zur Verfügung stehen. Vielleicht wird da jemand wirklich „schlauer“ und klärt auch mich auf?

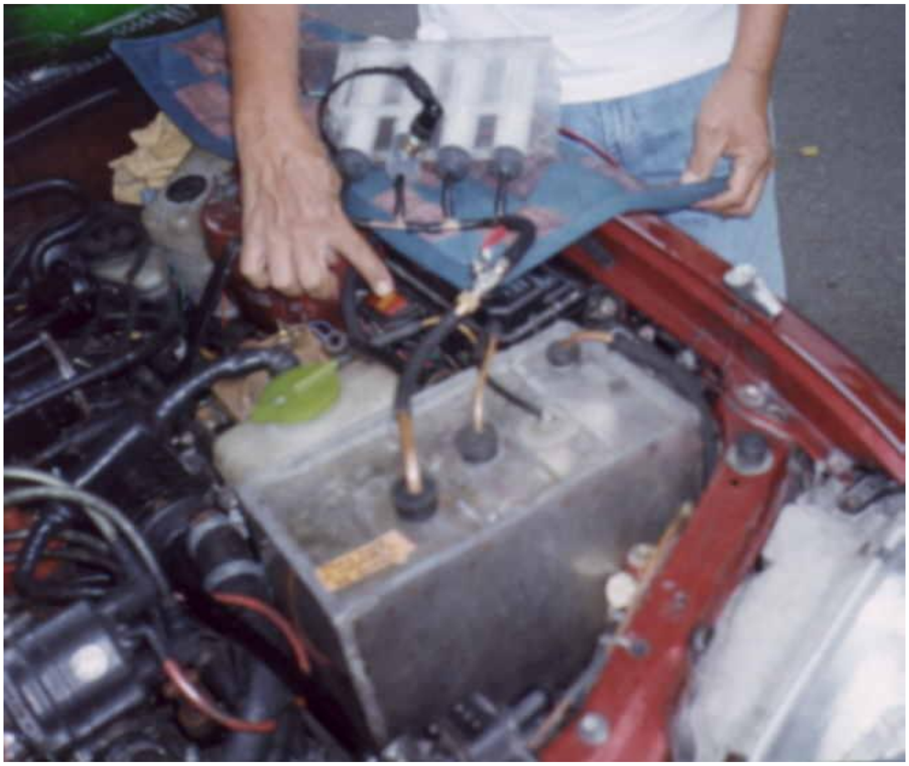

3.0.0.3. Das Neutrino-Difusor Ei

“Es ist unangebracht, daß Sie Ideen präsentieren, die derart vom erworbenen Wissen abweichen und zudem irrsinnig sind”, so urteilte die British Royal Society im Jahr 1796 in einem Schreiben an den englischen Arzt Edward Jenner (1749 – 1823), den Erfinder der Pockenschutzimpfung.

Und was sagt man HEUTE zu Herrn Zlatko Loncar mit seinem, Burning Water, mit seinem “Fuel Cracker”?
waterpowers@yahoo.com , **das war** seine E-Mail-Adresse, **das war** seine
Tel. #: 00385 91 521 4339 und das war seine Adresse:

Mr. Zlatko Loncar
Händelova 2
10000 **Zagreb;** Kroatien

Herr Loncar spricht und versteht DEUTSCH und sein Finanzier ist wahrscheinlich http://www.antunovic.hr/

..............und heute ist Herr Loncar nicht mehr erreichbar nun, ja?!

Erklärende Links:

WEB Seiten zum besseren Verständnis der Materie:

http://www.torkado.de/Wirbelsysteme.pdf

http://www.peswiki.com/index.php/Directory:Steorn_Free_Energy

http://peswiki.com/energy/Directory:Electromagnetic

http://peswiki.com/index.php/Directory:SuperMag_by_Enigma

Der kroatische Privatforscher Slatko „Shad“ Loncar hat zwei Verfahren entwickelt, mit denen sich Fluide auf molekularer Basis in ihre atomaren Bestandteile spalten lassen.

Sein Patent erzeugt im Rahmen der Elektrolyse von Wasser durch magnetische Resonanz an der Oberfläche der Kathode punktförmige Wirbel, in deren Kern die Moleküle in schnelle Rotation versetzt werden. Bei Rotationsfrequenzen von 200 MHz zerfällt das Wasser in Knallgas, bei 3GHz erzeugt das Gerät ein langsamer brennendes Gas. Interessant dabei ist, daß die anregenden Frequenzen in wesentlich niedrigeren Bereichen liegen, als die Rotationsgeschwindigkeit der Wirbelkerne.

Das entstehende Knallgas bildet einen Film auf der Oberfläche der Kathode und wird durch das durchlaufende Wasser ausgespült. In dieser Apparatur werden zylinderförmige Kathoden eingesetzt. Die Elektrolyse läuft kalt ab, ein Teil der für die Spaltung benötigten Energie wird durch die Selbstbeschleunigung der Punkt-Wirbel aus dem Raum gezogen. In einer verbesserten Geometrie in einer eiförmigen Kammer, dem Neutrino-Diffusor- Ei, konnte auf einen Elektrolyse-Strom vollständig verzichtet werden. Der Effekt bleibt derselbe. Energie wird hier ausschließlich für das impulsgebende Signal und das Durchpumpen der Flüssigkeit benötigt.

Tesla benutzte NEGATIVE Elektrizität (Non-Hertzian waves) um seine Spulen zu betreiben. Hohe Spannungen und Frequenzen sind Hertzian waves.

Die Aussage Shad’s dazu war:

Positive electricity is the generative electricity.

Positive electricity is that state of motion in which -electricity dominates magnetism.

Positive electricity is that state of motion in which -centripetal force dominates centrifugal force.

Negative electricity is the radiative energy.

Negative electricity is that state of motion in which -magnetism dominates electricity.

Negative electricity is that state of motion in which centrifugal force dominates centripetal force. Electricity and magnetism exist as separate appearances only when opposed.

In non-opposition they disappear, they become one.

Electricity and magnetism are not two separate -forces, nor they are two separate substances. They are -merely two different dimensions of motion. They belong -solely to motion and not to substance.

Neither are positive and negative electricity two -kinds of electricity. Positive and negative electricity - are but two differing potential's of the same force -which must move in opposite directions.

Shad arbeitete mit ELF-Wellen (Extremely Low Frequency) http://www.horusmedia.de/1996-haarp/haarp.php

The "Fuel Cracker" was originally called 'Neutrino Diffusor', but "Fuel Cracker" makes its function clearer.

The Fuel Cracker is a passive unit which makes it possible to decompose fossil fuels, as gas, diesel or kerosene to gas. The only needed power input is the pump which moves the fluid through the resonator.

The resulting gas is highly efficient and clean in combustion.

In a simple table model the process can be optically easily reconstructed. The fluid flows through the resonator - the ND - whereby on the resonator 's surface the gasoline is dissociated to gas. This gas film is carried away with the remaining fluid which is moved through the pipe.

The gas is extracted and can be used to power any combustion engine. May it be a car or a power generator, industrial or at home.

This could be an efficient way to reduce emissions.

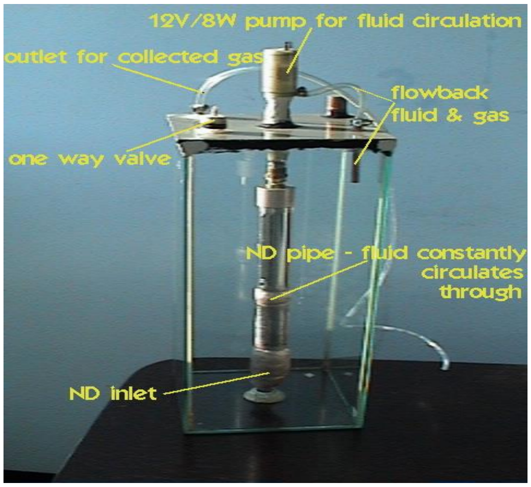

The "magnetic resonance unit

This is how Shad simply calls it. This is a process for water dissociation.

The water and the entire system remain cold, while running.

Shad is using a radio frequency, a disruptive discharge to split water into its components H and O - but as it seems the minerals and metals as well are decomposed.

Resulting is a gas after a time becomes brown and burns very slowly. Beside you see a single ignition of the water surface, splitted into several pictures.

This kind of water dissociation has the advantage of not having the heat losses, we know from the conventional electrolysis. And there is sufficiently gas generated to run whatever combustion engine or fuel cell.

The process depends on different details, such as a specific electronically circuit outputting the appropriate frequency of course, and the shape and material of the electrodes.

The Dream – an inexhaustible energy source

Since the energy problem exist and the energy needs of our consuming society are increasing constantly, the searches to solve it are going in different directions. Sometimes these searches are in completely opposite directions - from how to decrease the energy consuming to how to find another energy sources and use them to fulfill the needs.

Why is it considered that free energy is a dream, something imaginary and not realistic? It is because most people understand “free energy” as a perpetual mobile - a device which produces its own energy. And everybody knows that perpetual mobile is a dream. Although so many "free-energy" researchers do not want to have this true.

The perpetual mobile simply is a dream, because no engine or device is able to produce its own energy. There never was one, nor will there ever be one. If a device cannot produce its own energy, it also cannot run on it. So, there is no perpetual mobile - a self-running device - possible.

This also is meant for the **permanent magnet motors**, which seem to be self-running. The engines always will be a medium for energy - the permanent magnet motors as well. The magnets receive their energy, there is no closed system, as well as immovable, or firm matter, as it seems to be. It simply is an optical illusion for our limited senses.

Every good physicist or chemist can explain that immovable matter is made of molecules and atoms, rotating around their own axle, vibrating on a specific frequency, and like this also have an atomic magnetic field surrounding them.

Nothing is as immobile as it seems - everything is in motion and rotates. Matter simply is an electromagnetic vibrating condition in space. Therefore, energy already exists, it can only be transformed, but not be produced, nor destroyed.

Science surely did not yet reach its end, but regarding the subjects energy and matter, we can be sure these are facts.

In the same way as many researchers are using machines or devices as a medium, to transform energy, we are using water as a medium. If hydrogen is burned the only waste product is water-steam. If this one again is cooled it returns to water, the same amount we had before. What did we use? Nothing? From nothing comes nothing...

What we did use is AETHER, the inexhaustible source of energy which pervades all matter. Again, every physicist or chemist can confirm that the same amount of energy invested is gained by decomposing water, because by splitting the water, the ions are charged.

In our process we did not use up the water, it still is there, but the energy which was released did not directly come from the water, because then the water would be lost. But it still is there. The energy which we receive out of the water, came from the ionization of the water. For a part of the ionization we have to pay, but the biggest part of ionization we receive for free by the vortex technology, manipulated by our electronical system.

If you already have a solar-collector system, you are lucky because with this system you receive the energy for free. As well as by wind- or water- mills, etc... Then you invest the first input already with energy you receive for free. Our system will then maintain itself by the vortex system.

But if we receive more energy than invested for the ionization of the water, it means that another energy was part of the game, which additionally ionized the water. Otherwise it is not possible to receive more energy than invested.
No matter how we call it, it is a standing soundwave which moves as a vortex. The best condition for this vortex is the vacuum, or non-conductive, dialectric, non-linear materials.
This is a potencial vortex, which moves from its outer edge to its inside. The speed accelerates from out- to inside. It is the most harmonic method of transport for fluids, matter or anti-matter. In this vortex there is absolute harmony, no collision between the molecules or fluids, may they be material or anti-material.

The special about this vortex is that it can maintain itself under good condition, and that it moves from its outside to inside, accelerating the closer it comes to the center. A suck up effects in which the vortex sucks up fluids and aether, which makes it move on at a specific frequency and speed. This vortex will that long suck up aether or fluids, if it is not disturbed in its speed, and as long as the fluids and aether are not being used up. Aether pervades all matter and is inexhaustible, it cannot be used up, as well as water is.

This potencial vortex is exactly contrary to the elementary vortex. This elementary vortex moves from its inside to its outer edge and is self-destructible. Also, gravity is caused by this potencial vortex. And like this with this vortex the principle of inertia could be surmounted. This is the biggest obstacle in free energy, and those who try to create a perpetual mobile often forget inertia and gravity - and like this cannot be successful.

Also, the electricity still is a mystery in some sense, although it is well known, that by manipulation of magnetic fields electricity can be generated. But what is an electrical charge? Nobody knows. Unfortunately, this electricity is generated with great losses, because the power houses are immovable, and electricity is to be transported over long distances through wires. Like this only a small part of what a powerhouse generated reaches the user. Lots of energies are invested to generate electricity, mostly pressure or heat, which run turbines. But on long distances of wire transport of energy great amount of electricity is being lost.

Regarding the common accumulation of oil, petrol and gas this is a harmless process. If the surplus of hydrogen gas only is found in the pipes between the generator and the user, and such pipes are short and saved by valves, then it is much safer, then crossing the street, because the possibility to be run over by a car is higher than this few teaspoons of hydrogen to be exploded. If the path of the gas is properly prepared then in an (not possible) ignitions the pressure in the valves could be regulated, or even pushed out, so there is no explosion or harm possible. The only matter which is stored is water, which is not dangerous.

The great advantage with these mobile hydrogen supply also is that pollution is absolutely avoided. Even better: it PURIFIES nature. You may use dirty water from rivers or seas, you may melt arctic ice, after the dissociation and combustion of hydrogen and oxygen you receive clean distilled water. And the best on all about this is that by transformation of the energy mostly aether and water is used, which is for free, and like this the source of the personally invested energy is rechargeable.

The end product is energy for free.

3.2.0.0. Water splitting into the energy on the molecular level.

Aether, zero-point energy, taichone-energy, orgon-energy, prana, chi, scalar-energy, bioenergy, or as the quantum physicists name it: neutrinos, and so on ……. there are lots of names, more or less, for the same matter. No matter how we call it, it is a standing soundwave which moves as a vortex.

Bei Perpetuum Mobile wird immer vermutet, daß irgendwelche Energie ´verbraucht´ wird, z.B. Wärme der Umwelt entzogen oder dubiose ´Null-Punkt-Energien´ im Spiel ist. Es wird stets unterstellt, daß Energie nur von einer Form in eine andere zu transformieren ist. Das ist häufig der Fall, aber ein ´un-produktiver´ Prozeß.

Man muß sich lösen von diesem Transformations-Denken, weil außer verbrauchen auch gebrauchen eine Variante darstellt.

3.2.1.0. Einführung zu einer neuen Energietechnologie

siehe auch http://www.rqm.ch/ bzw. http://www.torkado.de/Wirbelsysteme.pdf

Der nachfolgende Text stammt von obiger WEB Seite, auf der auch die dazu gehörigen Bilder enthalten sind.

Wirbelsysteme - ein physikalischer Sonderfall

Viele Wirbelsysteme stellen die Wissenschaft vor Rätsel. Diese Arbeit ist speziell hydrodynamischen Systemen gewidmet. Dort werden Phänomene beobachtet, die man in der herkömmlichen Schreibweise als negative Viskosität bezeichnet. Prof. Victor P. Starr hat eine Vielzahl solcher Phänomene in dem Buch „Physics of Negative Viscosity Phänomena 1969“ zusammengefaßt, das Ende der 70er Jahre für einiges Aufsehen gesorgt hat. Aber in der Theoriebildung zu diesen Phänomenen macht es Sinn, Wirbelsysteme aller Größenordnungen und in verschiedenen Medien zu betrachten, von Prozessen im Atomkern, so man sie in ihren Welleneigenschaften erfaßt, über Beobachtungen in Plasmen, in der Hydrodynamik bis hin zu den Bewegungsabläufen in Galaxien. Ich möchte zunächst in dieser breiter angelegten Sichtweise versuchen, einen Überblick über die möglichen Beschreibungsansätze zu geben, die bisher zu Wirbelsystemen gemacht worden sind. Dann wird es hoffentlich möglich sein, genauere Modelle für die anvisierten hydrodynamischen Systeme zu finden. Ziel dieser Arbeit ist die Entwicklung einer energietechnischen Nutzung dieser Phänomene.

3.2.1.1. Stan Meyer’s Molecular Dissociation of Water

In. the original setup that Stan Meyer showed us, he used 36 volts as the basic potential applied to the reaction chamber. He also commented that stainless steel (410 not 403 was the only metal that could be used as oxides formed with all others. His original chamber used 18inch long by 0,375inch diameter (o.d.) rod surrounded by 1inch diameter (i.d.) 16inch long pipe. The reason for the difference in length is for mechanical ease of construction. My prototype used 14inch long rod and 12inch long pipe of similar diameters as the drawing indicates.

Having a severe lack of parts diversity here in Sri-Lanka, I was only able to obtain a 24 volt. 8amp transformer and built my circuitry around that. The final output is 20 volts with Ml reading 10 amps to the pulsing circuit which generates a symmetrical square wave (50% duty cycle) to the fly back inductor connected in series with the chamber as the schematic shows. The fly back high voltage spike is directed across the chamber via c* end d*. The use of a high voltage spike alone, without the current being delivered through the liquid, will not cause the disassociation to take place. This I verified using an ignition coil in place of the inductor and applied the secondary with half wave rectification and blocking capacitor to prevent burn out to the chamber with no results. Apparently the current in the water aligns the molecules appropriately to allow the high voltage spike to do its work which in my opinion is the stimulation of molecular resonance. Once Stan's unit was made to begin breakdown (which takes 6 to 8 seconds) he was able to reduce both current and voltage to miniscule proportions. I attribute this to sympathetic oscillation of the aligned molecules, requiring very little in the way of additional excitation. A phenomena akin to Tesla's super resonance... resulting in Stan discovering that he only had to supply three pulses in ten to satisfy the requirement of the chamber. I have not yet had the opportunity to duplicate this portion of the experiment but, in time I will.

Duplication of the device described in these pages, however, will produce the phenomena and hopefully launch other enterprising end inventive souls on to designing their own refined models. It would be nice to have feedback so that we can all collectively work to bring about the transition to non-pollution energy.

P.S.- Though electrical circuit is by no means optimized but represents instead the result of parts availability here. Any good technician could improve on it quite readily.

There are two primary frequencies that produce the best results. They are: 14,372 Hz and 43,430 Hz. The former is about 50% more efficient, but it seems that just about any frequency between 9 KHz and 143,762 KHz works quite well. (1) This is because the nature of the wave form (a spike) is rich in harmonics and one of them is bound to be close to one of the two primary frequencies.
Use of permanent magnets may also increase efficiency. I'll give you the outcome of that attempt in my next letter along with the plans for what I hope to be a much-improved version.
Note: Sub-harmonics of the two primary frequencies at which dissociation will occur:

43430 Hz	143762 HZ
SUBHARMONIC	SUB HARMONIC
1st 21715 HZ	1st 71881 HZ
2nd 14476.67 HZ	2nd 47920.67 HZ
3rd 15517.5 HZ	3rd 35840.1 HZ
4th 8686	4th 28752.4 HZ

1500 VOLTS IS THE MINIMUM REQUIRED FOR MOLECULAR RINGING TO BEGIN.

3.1.2 A Hydrogen Fracturing Process & Related Water Fuel Cell Technology"

The purpose of establishing the Hydrogen Fracturing technology which has been developed is to use energy from the atom to produce a system which would lend itself to mass production. Meyer is now in the process of integrating the Electrical Polarization Generator (EPG) into the Hydrogen Fracturing Process. The Electrical Polarization Generator is a gas battery which produces electric energy directly from the fuel cell gases without chemical interaction. The significance of the voltage is that it is a potential energy source, not consumed energy. The most significant point is that the influence of voltage has a phenomenal effect on the splitting of the water molecule and does it in a controlled state. Voltage from the Electrical Polarization Generator separates the water molecule economically by not consuming power. It's a new technology --- bringing the water molecule from a liquid to gas ionization state, which in turn sets up the Hydrogen Fracturing Process of destabilization of the gas atoms to release their atomic energy. The process consumes very little power to accomplish this task.

The Voltage Intensifier Circuit (VIC) patent development had to be fully developed to bring on the voltage phenomenon where very low energy is being consumed.

In conjunction with this development, a new Electron Grid Extractor Circuit (EGEC) has been fully developed to extend the operability of the Hydrogen Gas Gun technology, which sets up the hydrogen fracturing process. The Voltage Intensifier Circuit patent development and Electron Grid Extraction Circuit had to be fully developed to bring on the voltage phenomenon where very low energy is being consumed.

What is this Hydrogen Fracturing Process? Since the Water Fuel Cell (WFC) dissociates the water molecule by the stimulation of voltage, this voltage technology has now been applied to the Fuel Cell gas atoms to release their atomic energy. Meyer discovered that not only can the water molecule be split into its component parts, but it is also possible to separate the atoms of gases into their component parts by the same voltage stimulation, releasing a tremendous

amount of thermal explosive energy from the atom under a controlled state. Under this process, preliminary tests show that energy yields from one gallon of water are predicted to equal that of 44,000 to 108,000 barrels of oil. The Hydrogen Fracturing Process is environmentally safe since the gas atoms are split into their component parts, releasing explosive thermal energy from the gas atom. The nucleus remains intact.
In conjunction to the Hydrogen Fracturing Process of the Water Fuel Cell technology, Meyer is now working out systems mechanics of retrofitting the EPG system to the entire Water Fuel Cell system. The entire systems mechanics are now being integrated together into a package system which, when miniaturized, will lend itself to production. All these previous steps have been necessary to ensure the system lends itself to the economics of mass production with costs held down.

Beyond the Electrical Particle Generator (EPG) system, which utilizes a magnetized gas to produce electrical energy, work is continuing the Electrical Polarization Generator to optimize its operational performance, which is also required for mass production. The EPG system is now being prepared for design interfacing with the existing WFC technology.

To reach the maximum operational effect of the EPG system, several types of magnetized gases are being developed and tested. Meyer is also developing the technology to enhance the electromagnetic deflection of the gas to optimize the EPG system still further. This development phase is now being considered for systems economics regarding manufacturing techniques.

What does the Hydrogen Fracturing Process (HFP) really do for the system? It destabilizes the mass and electrical equilibrium of the gas atoms, bringing them into a critical state for energy utilization.

The electronics control system determines systems operation and efficiency and is part of the HFP. It complies with both US and foreign patent requirements. It establishes electric circuit interfacing for the operability and efficiency of the HFP. In mass production, it will be reduced to a small, simple circuit component. The control system triggers the HFP and maintains control of it.
The Hydrogen Gas Injector Fuel Cell (HGIFC) is composed of resonant cavities (lower section) in a vertical array which splits water molecules into component parts by stimulation of a high pulse voltage frequency, setting up the resonant action. The liberated hydrogen and oxygen atoms and ambient air gases are stimulated from a liquid to gas ionization state prior to entering the Hydrogen Gas Gun (HGG), located on top of the resonant cavities. Gases are then allowed to go into the Hydrogen Fracturing Process. The thrust nozzle, located at the very top of the system, is an optical thermal lens affixed to the unit which triggers and sustains the Hydrogen Fracturing Process as to the flow rate of fuel cell gases. In mass production, the whole unit forms the Gas Injector Fuel Cell (GIFC). The complete unit will be reduced to a small, extremely light-weight unit. The Hydrogen Fracturing Process is completely environmentally safe. There are no radioactive materials used in the process, and it applies to all EPA standards, plus safety, housing and highway codes…

3.2.1.2. Beobachtungen in der Natur

In der Natur kommen zwei interessante Wirbelformen vor:

a) Wirbel endlicher Länge, wie z. B. bei Tornados (Luft), bei Blitzen (Plasma) oder in Tiefseetornados (Wasser). Diese Wirbel können während ihrer Entstehung drei Phasen durchlaufen: Die Ausbildung eines Potenzialwirbels durch äußere Einflüsse, eine Verdichtung der Wirbellinien um den Kern herum, die bei hydrodynamischen Systemen mit einer Reduktion der Reibungsverluste einher geht, und die Ausbildung einer stabilen Endform mit einer inneren Wirbelschicht, die auch als Vazsonyi-Schicht bezeichnet wird. Der Potenzialwirbel saugt spiralförmig Materie auf und spuckt sie durch den Wirbelkern wieder aus.

Das Wirbelgeschehen hat fraktale Qualitäten. Die oberste Skala ist der Wirbel selbst. Die zweite Skala dieser Struktur bildet sich zunächst als Oszillation senkrecht zur allgemeinen Fließbewegung aus, so daß der Wirbel aussieht, als sei ein gewendeltes Seil spiralförmig ihn Wirbel hineingewickelt. Ursache für die Ausbildung der zweiten Skala sind Korioliskräfte, da die Achse der Unterwirbel durch die Rotation des Gesamtsystems kontinuierlich gedreht wird. Höhere Skalen entstehen nach demselben Mechanismus, bilden aber komplexere Strukturen aus, da sich hier die Korioliskräfte aus zwei unabhängigen Metasystemen addieren. Insgesamt sind über ein Dutzend verschiedene stabile fraktale Wirbelmuster bekannt, die sich je nach den Rahmenbedingungen und der Genese des Systems einstellen. Die innerste Schicht des Wirbelgeschehens, die Vazsonyi-Schicht, die sich im Endstadium aus Drehimpulserhaltungsgründen ausbildet, sieht aus wie ein leicht verdrilltes Walzenlager, wobei sich die einzelnen Walzen mit erheblichen Geschwindigkeiten um sich selbst und um die Mittelachse des Wirbels rotieren. Im inneren von Tornados ist sie gut sichtbar. Bezüglich der Selbstähnlichkeit innerhalb der Struktur sind die Vazsonyi-Walzen ein Sonderfall, da sie im Vergleich zu den anderen Skalen relativ eigenständige Systeme mit einer überdurchschnittlich großen Ähnlichkeit zum Hauptwirbel sind.

Aber auch jenseits der makroskopischen Naturphänomene auf der Erde spielen Wirbel eine Rolle: Einige Größenordnungen höher sind es die Galaxien. Klar zu erkennen ist der Potenzialwirbel. Der Wirbelkern erscheint uns nur als gleißender Sternenhaufen, in deren Mittelpunkt ein Schwarzes Loch vermutet wird; und als Jet, der längs der Rotationsachse der Galaxie aus dem Zentrum wieder hinausgeschleudert wird. Einige Größenordnungen tiefer finden wir z. b. elektrische Potenzialwirbel, wie sie durch Konstantin Meyl mathematisch postuliert und beschrieben worden sind.

b) Die zweite Kategorie sind die Wirbelringe, die sich im Prinzip als ringförmig in sich geschlossenen Wirbel beschreiben lassen. Man kennt sie als Raucher- Ringe, die sich einmal in die Luft geblasen über zig Meter stabil und linear durch den Raum bewegen können. Aber auch in der Quantenphysik findet man solche Systeme als wellenbasierte Modelle für Elementarteilchen. Wie man am Raucher-Ring sehen kann, kommen sie im Gegensatz zum Wirbel mit linearer Achse ohne den Austausch von Materie mit der Umgebung aus und sind daher auch weniger anfällig für Störungen von außen.

Generell kann man sagen, daß es Wirbelsysteme unterschiedlicher Stabilität gibt. Begreift man die Elementarteilchen in ihren Welleneigenschaften als Wirbelsysteme, so hat man es hier teilweise mit extremen stabilen Strukturen zu tun. Und auch als Galaxie hat diese Wirbelform eine beachtliche Lebensdauer.

Aber auch auf der Erde kann man Strukturen besonderer Stabilität beobachten: es gibt Hurrikane, Tornados, Elektronenwirbel in Blitzkanälen. Der Durchmesser der auf der Erde auftretenden Wirbel ist wie der von Elementarteilchen und Galaxien streng begrenzt: Ein Hurrikan hat immer um die 30 km Durchmesser, ein Tornado hat immer ca. 50 Meter, ein Blitzkanal zwischen 1,25 und 5 cm. Dazwischen entstehen keine stabilen Strukturen. Trägt man diese Werte auf logarithmischen (ln) Skalen auf, so stellt man fest, daß „stabile" Größen in regelmäßigen Abständen entstehen. Dieser Umstand ist ausführlich durch die „Global-Scaling-Theorie" von Hartmut Müller beschrieben worden.

Die „Stabilität" der Wirbel, die man auf der Erde beobachten kann, manifestiert sich in der Fähigkeit zur Selbstorganisation von Materie. Hierbei handelt es sich wie schon beschrieben um die Ausbildung von fraktalen Turbulenzstrukturen, die die von dem Potenzialwirbel angesaugte Materie in einer Form ordnen, daß ein stabiler Wirbelkern entsteht und im weiteren Verlauf die Materie beim Eintritt in den

Wirbelkern die dort ausgebildete Struktur erhält. Stabile Wirbel können große Mengen kinetischer Energie akkumulieren.

3.2.1.3. Gängige Erklärungsmodelle

Für die Herkunft der akkumulierten Energie gibt es zwei gängige Erklärungsmodelle:

1. Man erklärt die Hauptsätze der Thermodynamik für unumstößlich und sucht eine hydrodynamische, elektrodynamische oder magnetohydrodynamische (MHD) Erklärung für die Herkunft der Energie: meist werden atmosphärische Spannungen herangezogen, beim Blitz sowieso, aber auch beim Tornado gibt es Modelle, nach denen eine kontinuierliche Entladung der Atmosphäre den Tornado wie einen Elektromotor antreibt. Die beobachtete Abkühlung der Wirbelkerne (in Gasen) wird hier durch adiabatische Expansion erklärt.

2. Man geht davon aus, daß die im Wirbel eintretende Ordnungsbildung, also die Entstehung fraktaler Turbulenzstrukturen, zu einer Wechselwirkung führt zwischen dem was wir Wärme und dem was wir Bewegung nennen. Eine Transformation von der (ungeordneten) thermischen Energie in (gerichtete) kinetische Energie ist unter der Bedingung einer molekularen, dynamischen Ordnung prinzipiell denkbar – würde aber wegen der spontanen Umwandlung von Energie skalarer Natur in Energie vektorieller Natur das mathematische Modell, das der Thermodynamik zugrunde liegt, sprengen und den 2. Hauptsatz der Thermodynamik außer Kraft setzen. Die beobachtete Abkühlung bei gleichzeitiger Selbstbeschleunigung ist in diesem Modell ausschließlich Folge der Umwandlung von thermischer in kinetische Energie. Dieses Modell steht – zumindest für Wirbel mit linearer Achse - theoretisch nur deshalb nicht wirklich im Widerspruch zu den Hauptsätzen der Thermodynamik, weil es sich um ein thermodynamisch offenes System handelt, für das die Hauptsätze per Definition ohnehin nicht gelten.

Man könnte sich an dieser Stelle zufrieden geben. Allerdings beschränken sich diese Erklärungsmodelle auf die Beobachtung einiger hydrodynamischer Phänomene. Weder die Bewegung von Galaxien wäre damit hinreichend erklärt Randbereiche drehen schneller als die zur Zeit anerkannten Rechenmodelle erlauben), noch der Grund für die immense Stabilität von Elementarteilchen. Auch die Frage, warum stabile Wirbelsysteme nur in bestimmten Größenordnungen entstehen, die auf der besagten logarithmischen Skala in regelmäßigen Abständen angeordnet sind, bleibt unbeantwortet.

3.2.1.4. Aktuelle Erklärungsansätze

Hydrodynamische Wirbelsysteme sind wie gesagt fraktale Strukturen. Damit sich diese fraktalen Muster ausbilden können, braucht man einen Energietransfer zwischen den Skalen des Systems. Wirbel bewerkstelligen dies auf unterschiedlichste Weise, im einfachsten Fall durch Ausgleichsbewegungen auf adiabatische Ungleichgewichte im Schwere- oder Zentrifugalfeld, diese spontan entstehenden Bewegungen verstärken und stabilisieren sich durch auftretende Korioliskräfte. Bei schnelleren und größeren Systemen findet ein Energieaustausch aber auch durch akustische und elektromagnetische Resonanzphänomene statt.

Teile des Wirbels erzeugen Schwingungen, andere Teile geraten in Resonanz und absorbieren Teile der abgestrahlten Energie. Da Resonanz nicht nur bei identischen Frequenzen, sondern auch über harmonische Reihen entsteht, ist in Wirbelsystemen der Übertrag von Energie zwischen den Skalen durch akustische und/oder elektromagnetische Wellen möglich.

Mit der Möglichkeit durch Resonanz akustischen und/oder elektromagnetischen Wellen Energie zu entziehen erschließt sich für Wirbel eine Reihe von neuen Energiequellen. Naheliegend insbesondere im Hinblick auf den Tornado sind die bekannten niederfrequenten atmosphärischen Schwingungen: oszillierende Luftbewegungen, die ab einer bestimmten Höhe eine Rolle spielen (dieser Ansatz wird z.B. von Ivgueni Sorokodoum aus Moskau vertreten), und die Schumann- Frequenz: eine zwischen der Ionosphäre und der Erdoberfläche stehende elektromagnetische Welle von 7,83 Hz. Eine Wechselwirkung zwischen diesen Schwingungen und dem Wirbelgeschehen in der Atmosphäre ist denkbar und könnte auch das Auftreten bestimmter Resonanz-Größen erklären.

Nicht erklären würde dieser Ansatz die globale Skalierung von Wirbeln, die a. auch außerhalb der Erdatmosphäre und ihren Schwingungen gilt und b. wie von Hartmut Müller gezeigt auf einer logarithmischen Einteilung basiert und nicht auf harmonischen Reihen, die eine regelmäßige Verteilung gemäß des Logarithmus zur Basis 2, 3, 4, ... , n implizieren würde. Es ist somit davon auszugehen, daß es eine weitere Energiequelle gibt, die sich auf das Wirbelgeschehen auswirkt – bzw. eine Feldgröße, die einen Energieaustausch zwischen den Skalen selbstähnlicher Strukturen ermöglicht. Findet man einen solchen Übertragungsmechanismus, wäre es denkbar, Selbstbeschleunigung in Tornados über die Selbstähnlichkeit zu Galaxien oder aber auch Schwingungsformen in Elementarteilchen zu erklären, oder – denkt man das System bis hinunter auf die niedrigsten Skalen - als Resonanz auf Schwingungen im Quantenvakuum.

Es gibt meines Wissens sechs Forschungsrichtungen bzw. Theorien, die hier Erklärungsansätze bieten:

1. Konstantin Meyl propagiert die Annahme eines Skalarfeldes, also einer vierten Feldgröße neben Elektromagnetismus und Gravitation, die zu einer einheitlichen Feldtheorie führt. Alle vier Felder stehen somit in streng definiertem Zusammenhang miteinander. Er geht insofern konform mit der Schulphysik, als daß sich durch sinnvolle Vereinfachungen die Hauptsätze der Thermodynamik aus seinen mathematischen Modellen ableiten lassen. Dem Skalar Feld sind in diesem Kontext Fähigkeiten zugeordnet, die in dem Wirbelgeschehen eine Rolle spielen könnten. Es wird oft in Verbindung mit Neutrinos gebracht, die als Teilchen eine Manifestation dieses Feldes sein könnten. Energetische Effekte werden daher oft als Neutrino Kollektion gelesen.

2. Die umfangreichen Forschung zur Nullpunktenergie. Hier wird dem Quantenvakuum eine hohe Energiedichte zugemessen, die unter bestimmten Konditionen in Wechselwirkung mit Materie treten kann. Es wird überwiegend mit Plasmen und mit Supraleitung experimentiert, die wegen der hohen Viskosität der bewegten Teilchenströme eine deutliche Wechselwirkung zwischen Materie und Nullpunktfeldern aufweisen.

3. Eine erste Rechengrundlage für die beobachteten Phänomene könnten neueste Forschungen zur Wechselwirkung zwischen Elektromagnetismus und Gravitation liefern, wie sie z. B. von Jerry E. Bayles vorgestellt wurden. Auch sie basieren wie bei Konstantin Meyl auf einer einheitlichen Feldtheorie, beziehen aber auch eine mögliche Wechselwirkung zwischen elektromagnetischen und akustischen Wellen ein.

4. Die Global-Scaling-Theorie von Hartmut Müller. Sie basiert auf Untersuchungen über die Häufigkeitsverteilung von stabilen Formen. Untersucht wurden nicht nur metrische Größen, sondern auch Gewichte und Zeiteinheiten bzw. Frequenzen. Auf der Basis dieser umfangreichen Datenmengen postuliert die Global-Scaling-Theorie mathematische Zahlenräume, die die beobachteten Gesetzmäßigkeiten zunächst einmal korrekt beschreiben. Grundlage ist die logarithmische (ln) Zahlengrade. Auf dieser häufen sich die ausgewerteten Größen in regelmäßigen Abständen, während andere Intervalle völlig leer bleiben. Auf diese Zahlengrade wird das mathematische Modell der schwingenden Perlenschnur angewendet, wobei Gravitation in diesem Modell mit dem Bestreben von Materie erklärt wird, sich an den Schwingungsknoten der Perlenschnur zu konzentrieren. Die aus diesem Modell resultierende mathematische Beschreibung hat Qualitäten einer echten Dimension. Sie arbeitet mit rekursiven Kettenbrüchen, bringt also fraktale Muster hervor. Die gesamte Vielfalt der ausgewerteten Naturphänomene läßt sich nach Hartmut Müller mit drei sich überlagernden Häufigkeitsverteilungen beschreiben, die um den Wert von ln (6) bzw. ln (1/6) gegeneinander verschoben sind. Bei Systemen, die knapp ober oder knapp unterhalb der Resonanzgrößen liegen, soll nach der Global-Scaling-Theorie ein Energieübertrag stattfinden, der zu Over-Unity-effekten führen kann.

5. Der Atomic-Vortex-Theorie von Derek Bond. Sie formuliert ebenfalls die These, daß es einen Energieaustausch zwischen Wirbelsystemen verschiedener Größenordnungen gibt. Sie ist auf quantenmechanische Modelle basiert und versteht unser Universum als einen schmalen Frequenzbereich aus einem wesentlich umfangreicheren Spektrum an energetischen Schwingungen. Wirbelsysteme sollen Energie aus höherschwingenden Frequenzbereichen, die normalerweise mit unserer Realität nicht wechselwirken würden, herunterspannen.

6. TGD (topological geometrodynamics) ist eine neue physikalische Theorie, die einen dimensionalen Raum postuliert. Unsere Realität kann im einfachsten Fall als „space-time-sheet“ verstanden werden, also eine vierdimensionale Folie aus dem 8-dimensionalen Raum. Unerklärliche energetische Effekte werden in diesem Modell als Wechselwirkungen zwischen verschiedenen „space-time-sheets“ verstanden.

Ich werde später noch näher auf die Qualitäten der soeben dargestellten Modelle und Theorien eingehen. Zunächst möchte ich aber einige Experimente vorstellen, um einen anschaulicheren Zugriff auf die Materie zu ermöglichen.

3.2.1.5. Victor Schaubergers Wirbelrohr

Victor Schauberger gilt als der Pionier der Wirbelforschung. Der österreichische Wasserwirt kam durch jahrelange Beobachtung von Wasserbewegungen in der Natur zu dem Schluß, daß spiralförmige Wasserwirbel gegen die allgemeine Betrachtungsweise keine Entropie vernichten, sondern sie erhöhen - was zu einer spontanen Selbstbeschleunigung der Wirbel führt. Zum Nachweis dieser These konstruierte er ein Wirbelrohr, das später zum Hauptbaustein seines „Heimkraftwerkes“ werden sollte. Dieses Rohr sah aus wie ein doppelt gewendeltes Widderhorn. In einem Versuch ließ er das Wasser durch die große Öffnung aus einem höher gelegenen Reservoir in dieses Rohr einfließen. Das Wasser formte in dem Rohr einen Wirbel und schoß am unteren „dünnen“ Ende heraus. Ein Vergleich der Austrittsgeschwindigkeit bzw. der durch sie erzeugten Drucksäule mit der Höhe des Reservoirs bei verschiedenen Durchfluß Geschwindigkeiten ergab folgende Graphik.

Der Resonanzpunkt, der unterhalb der x-Achse liegt, zeigt einen solchen Zustand negativer Viskosität. Die Versuchsergebnisse und Apparate Victor Schaubergers wurde während des zweiten Weltkrieges teils von den Deutschen, teils von den Amerikanern vernichtet, beschlagnahmt oder zum Staatsgeheimnis erklärt, so daß seine Versuche bis heute von keinem unabhängigen Institut nachvollzogen werden konnten.

3.2.1.6. Wasserwirbel bei DM-Tor

Dr. Alexey Savchenko von DM TOR in Moskau hat versucht, Apparate zur thermischen Separation in Gasen (Vortex-Gas-Pipes) auf Fluide zu übertragen
(2. International Conference: Prospects for Conservation and Development of Unitary Planetary Civilization. Moskau May 26-31, 2002. Report: Alexey Sevchenko/DM-TOR.)

In den Vortex-Gas-Pipes wird tangential ein Gas in einen langen Zylinder eingeblasen. In den Zylinder entsteht ein Wirbel. Der Auslaß erfolgt durch zwei relativ dünne Rohre, eines zapft aus dem Zentrum des Wirbels, das andere Rohr aus dem Randbereich. Läßt man z. B. Luft mit einer Temperatur von 20 ^{o} C einströmen, so erhält man aus dem Kern des Wirbels Temperaturen von – 40 ^{o} C und aus dem Randbereich 100^{o} C. Dieser Umstand wird bei Gasen derzeit auf adiabatische Expansion zurückgeführt – hervorgerufen durch das durch Zentripetalkräfte auftretende Druckgefälle. Die Energiebilanz steht hier in keinem Widerspruch mit den Hauptsätzen der Thermodynamik.

Bei ähnlichen Geometrien, nur mit Wasser statt Luft, hat die Apparatur von Dr. Alexey Savchenko genau wie die Gas-Vortex-Pipe thermisch separiert. Dies erscheint zunächst verwunderlich, da Wasser relativ inkompressibel ist und somit adiabatische Expansion als Ursache ausscheidet. Darüber hinaus wurde zusätzlich thermische Energie aus einer unbekannten Quelle akkumuliert; und zwar gemessen an der Leistungsaufnahme der Pumpe (der einzigen Energiequelle im System) mit einem Wirkungsgrad, der unmittelbar nach Inbetriebnahme zwischen 120 und 200% oszillierte. Der Wert unterlag beim weiteren Betrieb der Apparatur einer sinusförmigen zeitlichen Schwankung mit einer Periodenlänge von 1 Stunde und pendelte sich nach etwa zehn Perioden bei 160% ein.

3.2.1.7. Biefeld-Brown-Effekt

Der Biefeld-Brown-Effekt (Alexandre Szames, L'Effet Biefeld Brown, vol. 1, 1998) besagt, daß geladene Kondensatorplatten eine Beschleunigung in Richtung der positiv geladenen Platte erfahren. Der Effekt wurde in den 60er Jahren entdeckt. Der Effekt verstärkt sich durch asymmetrische Plattenanordnungen, die gekrümmte oder gefächerte Feldlinien erzeugen. Dieser Effekt wurde ausgiebig von Jean Claude Lafforgue untersucht – sowohl in bezug auf echte Kondensatoren, als auch in dem Patent FR2651388 (Patentschrift und mathematisch-physikalische Grundlagen zur Wirkung des Biefeld-Brown-Effektes auf dipolare Flüssigkeiten finden Sie in der Patentschrift unter: http://www.terra.es/personal7/dafero4u/FR2651388/FR2651388.htm in bezug auf dipolare Flüssigkeiten unter dem Einfluß elektrischer Felder in bestimmten Geometrien.

Auszug aus der Patentschrift FR2651388 - **Isolated systems self-propelled by electrostatic forces von Jean Claude Lafforgue.**

2 und 3 sind jeweils die Kondensatorplatten, 1 ist eine dipolare Flüssigkeit, die sie umströmt. Die Feldlinien des sich aufbauenden elektrischen Feldes sind gekrümmt. Als Folge des Biefeld-Brown-Effekts erfahren die einzelnen Dipole, die sich nach den elektrischen Feldlinien ausrichten, eine Kraft, die in der Resultierenden ein Durchströmen der Kondensatorplatten und wegen der begrenzten Durchflußmenge zu einer Beschleunigung der Apparatur nach unten führen.

Der Biefeld-Brown-Effekt geht nach der herrschenden Meinung auf eine statistisch gerichtete Neutrinokollektion durch Elektronen zurück. Der Biefeld-Brown-Effekt unterliegt nach Untersuchungen von T. T. Brown zeitlich periodischen Schwankungen, die sich an kosmischen Prozessen orientieren, Tagen, Jahreszeiten.

Report: Russ Anderson: A Review of Modern (1988-2000) Biefeld-Brown Effect Replication Experiments. Antigravity conference 2000 in Reno, NV.

3.2.1.8, Der Searl-Generator

er Searl-Generator geht auf den Britischen Forscher John R.R. Searl zurück. Untersuchungen am dynamischen Verhalten von Permanentmagneten aus den Jahren 1946 bis 1952 führten zur Erfindung des Searl-Generators. Nach den damaligen Forschungsberichten war es John Searl gelungen, mit Hilfe um einen Kern herum rotierender homopolarer Permanentmagneten eine völlig neuartige Energiequelle anzuzapfen. Da die Herstellung der dazu benötigten Magneten eine komplizierte und nicht immer erfolgreiche Prozedur war, und die Originalunterlagen bei einem Brand in dem Labor vernichtet wurden, konnte der Searl-Generator erst kürzlich auf der Grundlagen von mündlichen Aussagen von John Searl von Godin und Roschin in Moskau erfolgreich nachgebaut und betrieben werden.

V. V. Roschin and S. M. Godin: Experimental Research of the Magnetic-Gravity Effects. Abstract: Institute for High Temperatures, Russian Academy of Science. Online unter:

In dem Searl-Generator kam es bei Godin und Roschin zu folgenden Effekten: Bis zu 200 Umdrehungen pro Minute verhielt sich das Gerät ganz normal. Danach fing es an, sein Gewicht zu verändern, und die Leistungsaufnahme des Antriebs ging gegen Null. Der Generator wurde leichter. Nach dem Abschalten des Antriebes beschleunigte der Searl-Generator selbständig auf 550 Umdrehungen pro Minute, lieferte dabei 6-7 Kilowatt Leistung. Im Raum um den Searl-Generator bauten sich Lichtwände auf, auf den Rollen selbst kam es zu wellenförmigen Lichtmustern. Der Geruch von Ozon breitete sich im Raum aus. Noch im Abstand von 15 Metern kam es zu ringförmigen Magnetfeldern bzw. Wällen.

3.2.1.9. Die PAGD- und IVAD-Technologie des Ehepaars Correa aus Kanada

Ein weiteres interessantes Konzept sind die PAGD und IVAD-Technologien (P. N. Correa, M.Sc., PhD, and A.N. Correa, HBA: POWER FROM AUTOELECTRONIC EMISSIONS. (EDITED EXCERPTS FROM "ADVANCED COMMUNICATION ON A NEW POWER TECHNOLOGY", LABOFEX DEVELOPMENT REPORT S3-001) Online) des Ehepaars Corea aus Kanada. Sie beruhen auf dem seit den 30er Jahren bekannten Effekt, daß es in Vakuumröhren beim Anlegen einer relativ geringen Spannung durch einen Stromstoß zu einer anomalen Kathodenentladung kommen kann, die mehr Energie freisetzt als benötigt wird, um die Entladung auszulösen. Eine wichtige Rolle spielt dabei das Auslösen von Metall-Kationen aus der Anode, die die Röhre, in der dem Elektronenfluß entgegengesetzten Richtung durchqueren. Den Correas ist es durch gepulste Ströme bestimmter Frequenzen gelungen, eine solche Röhre zu einer rhythmischen Dauerentladung zu bringen, die inzwischen 2KW „freie“ Energie liefert. Die freigesetzten Elektronen und Metallionen bilden beim Durchqueren der Röhre Wirbelkanäle aus.

3.2.2.1. Vergleichende Analyse

Bei den aufgeführten Experimenten handelt es sich auf den ersten Blick um eine Reihe unzusammenhängender Phänomene. Begibt man sich auf die Suche nach Zusammenhängen, so kommt man zu folgenden Thesen.

1.) Alle Systeme weichen in ihren experimentellen Ergebnissen von den Hauptsätzen der Thermodynamik ab.

2.) Alle Systeme weisen eine hohe molekulare Ordnung auf. Sei es durch das Anlegen eines ordnenden Feldes, wie beim Patent von Jean Claude Lafforgue, oder durch Selbstorganisation in Wirbelsystemen, wie bei Schauberger, den Correas, Savchenko und Loncar. Der Searl-Generator ist hier als Sonderfall anzusehen. Bezüglich Form und Bewegungsablauf ist er eine exaktes Abbild der Vazsonyi-Schicht mit ihren rotierenden Walzen. Es ist zu vermuten, daß die eigentliche Wirbelbildung in diesem bewegten Korsett als Elektronenwirbel stattfindet.

3.) Die Systeme basieren entweder auf der Bewegung von freier Ladung (PAGD/IVAD, Searl-Generator) oder auf der Bewegung von dipolaren Molekülen.

4.) Alle Systeme mit Ausnahme des Patentes von Jean Claude Lafforgue, bei dem jeder Dipol ein unabhängiges Subsystem bildet, weisen spezifische Resonanzgrößen auf, die mit der Global-Scaling-Theorie in Deckung zu bringen sind. Die Selbstbeschleunigung des Searl-Generators beginnt bei 3 Hz und endet bei 9,16 Hz. Der rechnerische Wert nach Hartmut Müller liegt bei 5 Hz. Der Elektronenwirbel beim Ehepaar Correa hat ähnliche Durchmesser wie auch der natürliche Blitzkanal (1,5 – 5 cm). Wie auch die Ruhemasse des Elektrons ist dieser Wert gegen die Skalierung der hydrodynamischen Wirbelsysteme um den Wert ln (1/6) verschoben. Das Wasser in den Wirbelrohren des Victor Schauberger durchlief definitiv den für hydrodynamische Systeme rechnerisch interessanten Durchmesser von 10 - 17 cm (Durchmesser der Vazsonyi-Walzen im Tornado), und bezüglich der Rotationsgeschwindigkeit mit hoher Wahrscheinlichkeit auch den interessanten Frequenzbereich um die 5 Hz. Über die genauen Versuchsdaten bei DM-Tor liegen mir zur Zeit keine Daten vor.

Bezüglich der Resonanzgrößen führt diese Betrachtung zu zwei möglichen Interpretationen.

1. Man geht davon aus, daß die Wirkung auf molekularer Ebene (Biefeld-Brown- Effekt) systemunabhängig stets gegeben ist. Die Resonanzgrößen bei makroskopischen Systemen wären dann als Turbulenzsysteme zu definieren, in denen die vektorielle Addition aller molekularen Kräfte eine gerichtete Größe ergibt. Dies hängt von der Qualität der Ordnungsbildung ab. Systeme hoher Ordnung sind vermutlich zu erwarten, wenn die Winkelgeschwindigkeit der Oszillationen der verschiedenen ausgebildeten Skalen in einer harmonischen Reihe stehen. Zwischen diesen definierten Resonanzgrößen wird die Ordnungsbildung auf molekularer Ebene gestört und es kommt zu keiner gerichteten Große. Die einzelnen Kräfte heben sich gegenseitig auf.

2. Man geht davon aus, daß jede Skala unabhängig voneinander ihre Energie aus dem Quantenvakuum zieht. Dann wären die resultierenden molekularen Kräfte und die Wechselwirkung der makroskopischen Systeme mit dem Quantenvakuum vektoriell zu addieren.

Beide Interpretationen stützen sich nichts desto trotz dieselbe Energiequelle: das Quantenvakuum und die in ihm auftretenden Schwingungen, die bei richtiger Wahl der Frequenzen zu einer Übertragung von Energie führen können.

3.2.2.2. Anwendungen im Hinblick auf eine energietechnische Nutzung

Im Hinblick auf eine energietechnische Nutzung des Quantenvakuums lassen sich theoretisch verschiedene Konzepte herleiten, mit denen sich sowohl die nötige molekulare Ordnung als auch der Zugriff auf Resonanzgrößen herbeiführen läßt.

1. Herstellung von molekularer Ordnung von Dipolen durch das Anlegen von externen, künstlich erzeugten, ordnenden Felder bzw. die Herstellung der Resonanz durch ordnende Felder bestimmter Frequenzen via Wirbelbildung.

2. Herstellung von sich selbst stabilisierenden Resonanzfrequenzen durch die Herstellung von Resonanzräumen definierter Größe und Geometrie.

3. Herstellung molekularer Ordnung und der richtigen Resonanzfrequenz durch die natürlichen Selbstorganisation in Wirbelfeldern korrekt gewählter oder selbstregulierender Größe.

Um zu einer sinnvollen energietechnischen Nutzung zu gelangen, muß weiterhin die Energie-Entnahme in einer Weise vonstatten gehen, daß das System

a. nicht durch die Entnahme unmittelbar in seiner molekularen Organisation gestört wird und

b. durch die Akkumulation nicht abgeführter Energie nicht aus dem entsprechenden Resonanzbereich hinausläuft. Hier bieten sich wiederum verschiedenen Konzepte an:

1. Speicherung der gewonnenen Energie in chemischer Bindungsenergie. Dieses Konzept findet sich bei Slatko „Shad“ Loncar wieder.

2. Kontinuierliche Entnahme der Energie durch natürliche Abstrahlung von Wellen verschiedener Natur und Frequenz. Oder aber das Verrichten von Arbeit gegen eine dritte Kraft. Dies kann z. B. der Widerstand eines gekoppelten Generators sein, wie beim Searl-Generator. Man könnte aber auch in einem gegen die Gravitation aufsteigendem Wirbel Arbeit in potentieller Energie speichern.

3. Sind 1. und 2. nicht möglich oder nicht in der Lage, die gesamte gewonnene Energie eines hypothetischen Systems abzuführen, so wird das System sich selbst bezüglich Frequenz und/oder Größe an den Rand der Resonanzbereiche manövrieren. Ist dies nicht zu vermeiden so ist dafür zu sorgen, daß die Materie (in einem thermodynamisch offenen System) die interessanten Resonanzbereiche durchläuft und unmittelbar danach das System verläßt. Das Schauberger Wirbelrohr ist ein solches System, wobei leider der interessante Frequenzbereich durch die Verjüngung des Rohres in Fließrichtung relativ rasch durchschritten wird.

Um die Schlagkraft dieser theoretischen Überlegungen aufzuzeigen: Ein synergetisch sinnvollerer Effekt als beim abwärts fließenden Schauberger-Rohr ergäbe sich z. B. bei einem kontinuierlich expandierenden, aufsteigenden Wirbel. So könnte die akkumulierte kinetische Energie sowohl in Form von potentieller Energie abgeführt werden als auch in Form von kinetischer Energie, da diese bei konstanter Drehfrequenz im Quadrat zum Radius zunimmt. Die Verweildauer der durchfließenden Materie in den interessanten Resonanzbereichen wäre damit höher.

3.2.2.3. Das Taylor-Couette-System

Wasser gehorcht den Gesetzen der Hydrodynamik. Das von der Hydrodynamik am besten erforschte Wirbel-System ist das Taylor-Couette-System.

Es besteht aus zwei ineinander, unabhängig voneinander rotierenden Zylindern, zwischen denen sich Flüssigkeit befindet. Die Zylinder können gleichsinnig und gegensinnig rotieren, mit unterschiedlichen Relativgeschwindigkeiten. Nach den Untersuchungen im Taylor-Couette-System bilden sich im Wirbelfeld Turbulenzen aus, und zwar welche, in denen sich im Kleinen wieder ähnliche Turbulenzen ausbilden, und so weiter, und so fort – eine fraktale Struktur. Die Größe der kleinsten sich ausbildende Turbulenz nennt man die Taylorsche Mikroskala. Das Taylor- Couette-System bildet je nach Rahmenbedingung viele unterschiedliche stabile

Wirbelformen aus. Für große bzw. schnell rotierende Systeme ist eine bestimmte Wirbelform zu erwarten.

Siehe auch: Arne Schulz: Verzweigungen und Strömungen zwischen unabhängig rotierenden Zylindern. Dissertation zur Erlangung des Doktorgrade der in der Mathematisch-Naturwissenschaftlichen Fakultät der Christian-Albrecht-Universität zu Kiel, vorgelegt Mai 2000.
Makroskopisch sieht sie aus, als sei unter der Wasseroberfläche ein transparentes, x-fach gewendeltes Seil spiralförmig in den Zylinder gewickelt.

Eine wichtige Kenngröße von Wirbelsystemen ist die Reynolds-Zahl.

Re = 2r x v x ro/nu
Re = Reynolds-Zahl
v = mittlere Strömungsgeschwindigkeit
r = Radius [m]
ro = Massendichte
nu = Viskosität [Pa x s]

In Bezug auf die Reynolds-Zahl sind in der Hydrodynamik drei Überlegungen wichtig:

a) Bei kleinen Reynolds-Zahlen findet wie in jedem zweidimensionalen Wirbel ein Energietransfer von den großen Skalen auf die kleineren Skalen statt. Der Wirbel wird gebremst, die Energie überträgt sich auf die kleineren Wirbel bis hin zu den Kleinsten, wo sie letztendlich in Wärme dissipiert. Eine Beschleunigung des Wirbels selbst durch unmittelbare Energieübertragung innerhalb der fraktalen Struktur ist undenkbar. Bei steigenden Reynolds-Zahlen akkumulieren die Wirbel der kleineren Skalen zu viel Energie und werden instabil. Ein kleiner, aber wachsender Teil des Energieflusses kehrt sich um, Energie überträgt sich durch das Verschmelzen von Wirbeln von den kleinen auf die größeren Skalen. Das nennt man eine inverse Kaskade.

   Siehe auch: Axel Brandenburg: The inverse cascade and nonlinear alpha-effect in simulations of isotropic helical hydrodynamic turbulence. Nordita (Copenhagen) und University of Newcastle, May 12, 2000. Online unter: http://online.itp.ucsb.edu/online/astrot_c00/p_brandenburg/

   Ein Übertrag von Energie aus molekularen, atomaren oder subatomaren Vorgängen durch inverse Kaskaden wird prinzipiell denkbar, wenn sich das Ordnungssystem bis hinunter in den entsprechenden Bereich erstreckt.

   Allerdings bleibt dieser Anteil nach Einschätzung der aktuellen Hydrodynamik im Vergleich zu den Wirbelverlusten verschwindend klein. Diese inverse Kaskade war nichts desto trotz das hydrodynamische Modell, mit dem Prof. Starr die Phänomene um die negative Viskosität erklärt hat.

b) Bei großen Reynoldszahlen (siehe auch Kolmogorov A.N. 1941 "The Local structure of turbulence in incompressible viscous fluid for very large Reynolds numbers", Dokl. Akad. Nauk SSSR 30. Translated by V. Levin. Reprinted in Proc. R. Soc. Lond A 434, 9-13. (1991) reduziert sich die Größe der Taylorschen Mikroskala. Das heißt, daß das Ordnungssystem größenordnungsmäßig näher an den molekularen Bereich heranreicht. Die Ordnung des Systems insgesamt steigt. Solange man sich in der Hydrodynamik bewegt, bedeutet dies noch nicht viel, denn auch bei extrem hohen Reynolds-Zahlen liegen größenordnungsmäßig noch etwa drei Zehnerpotenzen zwischen der Taylorschen Mikroskala und dem molekularen Bereich. Erst bei einer totalen Ordnung, bis hinunter in den molekularen Bereich, wären nach Angaben der Hydrodynamik Modelle denkbar, nach denen z.B. thermische Energie durch das Wirbelsystem geordnet werden könnte; um dann über inverse Kaskaden nach „oben“ transportiert als kinetische Energie auf der größten Skala, also im Wirbel selbst, in Erscheinung zu treten. Modelle, die eine Energieübertragung zwischen den Skalen durch Resonanzphänomen in harmonischen Reihen berücksichtigen, sind den Autoren bezüglich der Taylor- Couette-Forschung nicht bekannt. Auch die Ausbildung einer Vazsonyi-Schicht wurde im Rahmen der Taylor-Couette-Forschung nicht beobachtet, da die hierfür nötigen Reynolds-Zahlen im Labor nicht erreicht werden.

c) Alle analogen Systeme in der Natur, Hurrikan, *Tornado (siehe auch Wallace Luchuk. “The Tornado From An Aerodynamicist's Point of View” und Magmakonvektion (siehe auch: R. Stieglitz, U. Müller: Kann man das Erdmagnetfeld im Labor simulieren. Forschungszentrum Karlsruhe, Institut für angewandte Fluid- und Thermodynamik, Wissenschaftliche Berichte, FZKA 6223.*
die ausreichend große Reynoldszahlen haben, weisen in ihren spezifischen Rahmenbedingungen elektromagnetische Selbstinduktion auf. (Siehe auch: Brandenburg, A.: 2001, "The inverse cascade in turbulent dynamos", in Dynamo and dynamics, a mathematical challenge, ed. P. Chossat, D. Armbruster, and O. Luliana, Nato ASI Series, Kluwer Publ. (in press) astro-ph/0012112. Online unter: http://www.solar.mcs.st-and.ac.uk/ .Unter dem Stichwort MHD findet sich hier einiges an interessanter Literatur, deren völlige Auswertung noch aussteht.

3.2.2.4. Vorläufige Auswertung im Sinne der Hydrodynamik

Gemäß dem Stand der Hydrodynamik kann es in Wasserwirbeln zu keiner Selbstverstärkung kommen. (Diese Schlußfolgerung entstammt in erster Linie aus Gesprächen mit Wissenschaftler aus den Bereichen der nicht-linearen Dynamik und der Hydrodynamik, darunter Christian Hoffman von der Universität Saarbrücken, Prof. Bruno Eckhard von der Uni Marburg, und Dr. D. Volchenkov von der Uni Bielefeld, bei denen ich mich an dieser Stelle noch einmal herzlich bedanken möchte.)

Der Mechanismus der inversen Kaskade in Taylor- Wirbeln ist zwar bekannt, aber es klafft eben jene Lücke von drei Zehnerpotenzen zwischen der Taylorschen Mikroscala und dem molekularen Bereich, und auch wenn es in den sich ausbildenden Wirbeln und Unterwirbeln zu einer inversen Kaskade kommen sollte, so könnte maximal nur soviel Energie an die größte Skala zurückgegeben werden, wie vorher durch die Entstehung der kleineren Skalen verlorengegangen ist. Nach Einschätzung der Hydrodynamik wird unter allen Umständen der Energieverlust durch die normalen dissipativen Prozesse eventuelle Rückflüsse durch inverse Kaskaden um Zehnerpotenzen übersteigen. Der Ansatz von Prof. Victor Starr ist für hydrodynamische Systeme in dem derzeit etablierten Forschungsbetrieb somit nicht anerkannt worden.

3.2.2.5. Mögliche Wechselwirkungen im atomaren Bereich

Es erscheint mir an dieser Stelle sinnvoll, sich bevor man weiterdenkt näher mit der molekularen Struktur von Wasser zu beschäftigen.

Die Strukturformel von Wasser ist H_2O. Wasser hat als Molekül Dipolcharakter. In Wirklichkeit besteht Wasser allerdings aus H_2O, OH- und H_3O+, die in permanentem gegenseitigen Austausch von H+ Ionen und somit in ständiger Verwandlung begriffen sind. Die OH- Ionen neigen zur Clusterbildung, das heißt sie bilden verknäulte Ketten und Klumpen, die bei normalem Wasser bis zu 50 Molekülen haben können. Sie werden zusammengehalten sowohl von den Dipol-Kräften als auch durch die zusätzliche Wasserstoff-Brückenbindung und ihren Van-der-Waals-Kräften. Die Cluster zerfallen permanent und bilden sich neu. Für die Theorien zur Hydrodynamik bleibt die molekulare Struktur von Wasser für das Wirbelgeschehen wegen der besagten drei oder mehr Zehnerpotenzen Größenunterschied unberücksichtigt.

Siehe auch: Martin Chaplin: Water structure and behavior.

Bevor ich zur Theoriebildung schreite, rein assoziativ drei Beobachtungen aus der „Praxis“:

a.) In der Homöopathie geht man davon aus, daß bestimmte Formen der Verwirbelung von Wasser die Clusterbildung begünstigen und daß man durch oft wiederholte, periodische Verwirbelung Cluster-Ketten höherer Länge und Stabilität erzeugen kann, die dann bestimmte Schwingungsmuster tragen.

b.)Versuche zur Wasseraufbereitung haben ergeben, daß die spiralförmige Verwirbelung, die beim Durchlauf durch die kleineren Skalen ja hoch periodische Bewegungsmuster erzeugt, den Reibungswiderstand des Wasser drastisch reduziert.

c.)Schon die Zugabe kleinster Mengen von stabilen Polymeren zu Wasser reduziert den Fließwiderstand in turbulenten Strömungen auf ca. 20%.

3.2.2.6. Hypothese

In Wasser, das die Skalen eines Spiralwirbels durchläuft, neigen die Cluster dazu, sich in Ketten entlang der lokalen Strömungslinien anzuordnen. Dies ist eine rein statistische Frage, denn die Wahrscheinlichkeit, daß ein senkrecht zur Strömungslinie verlaufendes Cluster durch die auftretenden Scherkräfte dissoziiert, ist logischerweise größer als bei parallel zu den Strömungslinien verlaufenden Clustern. Dieses Phänomen tritt bevorzugt ein, wenn der Wirbel durch einen Sog entsteht, da die Cluster in unter Sog beschleunigendem Wasser gestreckt werden. Die Berührungspunkte gleichläufiger Wirbel sind die Zonen, die die stärkste Scherkräften und somit den stärksten Reibungswiderstand erzeugen. Eine Reduzierung der inneren Bindungskräfte des Wassers an genau diesen Stellen würde sich überproportional stark auf die resultierende virtuellen Viskosität der gesamten Flüssigkeit auswirken. Und genau dies scheint insbesondere im Medium Wasser möglich zu sein: Die einzelnen Ionen bzw. Moleküle der sich ausbildenden und längs der Strömungslinien arrangierenden Ketten sind untereinander durch Dipol- und Van der Wals-Kräfte wie durch Federn aneinander gebunden. Senkrecht zum Cluster wirken weder Dipol- noch Van-der-Waals-Kräfte. Die Cluster können also genau dort verhältnismäßig reibungsarm aneinander vorbeigleiten, wo normalerweise die größten Reibungsverluste entstehen.

Die Cluster haben ein Gedächtnis. Sie merken sich Schwingungsmuster, besonders wenn man sie häufig wiederholt. Die thermische Energie des Wassers geht durch Stoßprozesse zwischen den Cluster-Ketten dabei mehr und mehr auf die longitudinalen Anteile der Schwingungsmuster in den Clustern über, was ursächlich sowohl für eine weiter steigende Stabilität als auch für eine weitere Reduzierung des inneren Reibungswiderstandes verantwortlich ist. Auch dies ist eine Frage der Statistik.

Die hydrodynamischen Eigenschaften des Wassers ändern sich radikal, da es in Bezug auf die Durchbewegung seine Dipolkräfte, die Van-der-Waals-Kräfte, als auch den temperaturabhängigen Anteil seiner viskosen Eigenschaften verliert. Letzteres will heißen: wäre die gesamte thermische Energie in dem longitudinalen Wellenanteil unendlich langer Ketten gefangen, verhielte sich das Wasser wie bei Temperaturen von -273 Grad, ohne dabei zu gefrieren. Die Viskosität, die in der Hydrodynamik als materialabhängige Konstante begriffen wird, geht gegen 0. Damit steigt wiederum die Reynolds-Zahl gegen Unendlich. Die Taylorsche Mikro-Skala wiederum geht gegen 0. Es bilden sich kleinere und kleinere Skalen aus, die den Anteil des stromlinienförmig ausgerichteten Wassers weiter erhöhen.

3.2.2.7. Interpretation

Trifft die unter 3.2.2.6. formulierte Hypothese zu, so sind Wirbel ab einer bestimmten Größenordnung in der Lage, molekulare Ordnung herzustellen. Kommt es nicht nur zu einer geometrischen, sondern auch zu einer elektrodynamischen Ordnung, d.h. zeigen mehr Clusterketten mit ihrem positiv geladenen Ende in Strömungsrichtung als gegen die Strömungsrichtung, resultiert aus der vektoriellen Überlagerung der Biefeld-Brown-Effekte auf die OH--Ionen eine Beschleunigung längs der Strömungslinien. Dies hat zur Folge, daß alle Skalen des Wirbels eine Energiezufuhr in Form von kinetischer Energie erfahren. Dies reduziert den Fließwiderstand gegen Null. Selbstbeschleunigung kann trotzdem zunächst nur durch die unmittelbare Auswirkung auf die erste Skala entstehen. Da in dem Turbulenzgeschehen der vektorielle Anteil von Stromlinien in tangentialer Richtung (in bezug auf das Gesamtsystem) relativ gering ist, ist dieser Effekt entsprechend gering). Dazu kommt nun der Mechanismus der inversen Kaskade. Er entsteht wie man hier sehen kann zwangläufig, da der Energieübertrag von den großen auf die kleineren Skalen bei gegen Null gehendem Fließwiderstand ins unendliche Wachsen würde. Dies führt zu Instabilitäten, die eine Vereinigung kleinerer Wirbel zu größeren nach sich zieht. Im stabilen Endzustand stellt sich eine Gleichgewicht zwischen den von Korioliskräften getriebenen dissipativen und den durch inverse Kaskaden betriebenen antidissipativen Energieflüssen ein. Ein Übertrag von thermischer Energie in dieses selbstregulierende System ist auf jeden Fall denkbar.

Im Hinblick auf eine Durchschalten der fraktalen Strukturen bin hinunter ins Quantenvakkum ist die Vazsonyi-Schicht von besonderem Interesse. In Bezug auf Selbstähnlichkeit sind die Walzen der Vazsonyi-Schicht verkleinerte Abbilder des gesamten Wirbels. Vom Tornado weiß man, daß die Vazsonyi-Schicht der eigentliche Motor des Wirbels ist. Es liegt nahe, diese Funktion auch auf andere hydrodynamische Systeme, wie z. B... Wasserwirbel, zu übertragen.

3.2.2.8. Konstruktion eines Wasser-Wirbelkraftwerkes

Ein Wasser-Wirbelkraftwerk müßte folgende Bedingungen erfüllen:

1. Bezüglich des Durchmessers muß es eine der bekannten Resonanzgrößen treffen. Hier sind die Durchmesser von 15 cm und 50 m technisch realisierbar.

2. Bezüglich der Drehfrequenz gibt es nur einen interessanten Resonanzbereich.

Er liegt bei 5 Hz.

Da bei 15 cm Durchmesser und 5 Hz Drehgeschwindigkeit im Medium Wasser keine interessanten Reynolds-Zahlen erreicht werden können, bleibt nur die Kombination von 50 m und 5 Hz.

3. Um die Verweildauer des Wassers im interessanten Resonanzbereich zu optimieren bietet sich ein expandierender aufsteigender Wirbel an. Die akkumulierte Energie liegt bei Austritt aus dem System als kinetische und potentielle Energie vor und kann mit herkömmlicher Technik verstromt werden.

4. Als „Gefäß“ für den Wirbel bietet sich ein rotierender Metallzylinder an, da so

a. die Reibungsverluste zwischen Wasser und Gefäß minimiert werden, und

b. durch eine externe Beschleunigung des Zylinders der Wirbel durch „Sog“ erzeugt werden kann. Die Vazsonyi-Schicht kann sich - durch den Potenzialwirbel gegen den Zylinder abgeschirmt - ungestört ausbilden.

5. Um ein thermodynamisch offenes System zu erschaffen, bedarf es eines kontinuierlichen Austausches von Wasser. Dies kann naturgemäß nur von unten zugeführt werden. Um hier den technischen Aufwand gering zu halten, bietet sich eine Wasserzufuhr aus einem bestehenden Reservoire über eine kommunizierende Röhre an.

Aus diesen Vorgaben läßt sich eindeutig ein Bauplan ableiten. Die Idee zu so einem System ist nicht neu. Sie wurde bereits in den 70er Jahren von dem Syrier Daruish al Khoos vorgeschlagen. (Siehe auch: Achmed A.W. Khammas: Der Messias mit der sanften Technik, SPHINX-Magazin, Schweiz 1976)

Seine Pläne sehen einen Durchmesser von 50 Metern sowie eine Drehfrequenz von 8 Hz vor. Durchmesser wie Drehfrequenz durchlaufen somit exakt die interessanten Bereiche.

Die Erfindung will Daruish al Khoos als Vision empfangen haben. Diese Maschine, die bereits im Koran in der Sure „Von den aufwärts wirbelnden Wassern“ (Vgl. 51. Sure des Koran, je nach Übersetzung mehr oder weniger überzeugend.) beschrieben ist, soll - ebenfalls im Koran prophezeit - Anfang dieses Jahrtausends unsere Eintrittskarte ins Paradies (auf Erden) darstellen. Da die Glaubensgemeinschaft der Moslems die Wiederkunft des Messias für das Jahr 2000 erwartet, hielt sich Daruish al Khoos naheliegenderweise für selbigen. Er starb Dezember 2001 im Alter von 78 Jahren.

3.2.2.9. Fachbereich Hydrodynamik

Wirbelsysteme der oben beschriebenen Form und Größe bringen einige physikalische Besonderheiten mit sich, die in der Theoriebildung berücksichtigt werden müssen.

Im Rahmen der Magneto-Hydro-Dynamik haben wir es mit rotierenden Magnetfelder zu tun, im Bereich der niedrigeren Skalen ist das gesamte Feldgefüge durch gekrümmte und/oder gefächerten Feldlinien bestimmt. Wie in Kapitel 2 gezeigt werden konnte, ist genau dies ein Merkmal von Systemen, die sich mit schulphysikalischem Handwerkszeug nicht beschreiben lassen können. Zur korrekten Berechnung der auftretenden Phänomene möchte ich anregen, die in der MHD benutzten Maxwell-basierten Rechenmodelle auf die einheitliche Feldtheorie von Konstantin Meyl umzuschreiben. Eine Vernachlässigung des elektrischen Logitudinalwellenanteils, wie in den Maxwell-Gleichungen geschehen, ist für ein solches System wissenschaftlich nicht zu verantworten. Die Meylsche Theorie hat hier den Vorteil, daß sie die herkömmlichen Rechenmodelle als Sonderfall beinhaltet, eine entsprechende Erweiterung ist daher mathematisch zu leisten. Auch ein mathematischer Übertrag auf die gravitative Kraft ist in diesem Modell beschrieben.

3.3.3.0. Fachbereich Physik

a.) Haben wir eine korrekte Beschreibung der elektrodynamischen Vorgänge, so ist eine Wechselwirkung zwischen elektromagnetischen und akustischen Wellen in Betracht zu ziehen. Da beide Wellenformen durch ein und dasselbe Bewegungsmuster erzeugt werden, ist zu erwarten, daß sie lokal synchron schwingen.

Einen ersten Ansatz hierzu bietet der Woodward-Effekt. Er basiert auf der Tatsache, daß der elektromagnetische Energiegehalt eines Probekörpers (z.B. ein Kondensator) nach E = m c2 in seine Masse mit einfließt. Ein oszillierender Energiegehalt zieht daher zwangsläufig auch einen oszillierenden Masse-Wert nach sich. Wird dieser Probekörper synchron zu dem schwingenden Feld gegen die Gravitation auf und ab bewegt (oder in einem Zentrifugalfeld radial), so ergibt sich eine kleine Energiedifferenz (z.B. im Gravitationsfeld nach E = mgh), die sich über die Anzahl der Oszillationen addiert. Bei hohen Frequenzen ist dieser Effekt makroskopisch deutlich meßbar.

Wesentlich ausgefeilter sind diesbezüglich die Theorien von Jerry E. Bayles, (siehe auch: Jerry E. Bayles: Electrogravitation as a unified field theory. Elektronische Publikation, downloadbar bei http://groups.yahoo.com/group/newelectrogravity/

Sie bieten eine wesentlich komplexere Rechengrundlage für die Wechselwirkung zwischen mechanischen und elektromagnetischen Schwingungen. Bayles Theorie beschreibt in Folge dieser Wechselwirkung gravitative Effekte. Auch Bayles arbeitet mit einer einheitlichen Feldtheorie. Inwieweit sie mit den Meyl'schen Modell kompatibel ist, muß überprüft werden.

b. Die Global-Scaling-Theorie basiert auf umfangreichen Messungen und beschreibt deskriptiv die in der Natur auftretenden Massen, Größen- und Frequenzverteilungen. In vielen Freie-Energie-Systemen geht es um die Suche nach der richtigen Resonanzfrequenz. Diese Frequenzen sind jedoch, wie man bei Loncar sehen kann, nicht unbedingt identisch mit den von Müller beschriebenen Frequenzen. Es scheint so zu sein, daß man die Wirbelkerne nur auf natürlichem Weg anregen kann, also über die Skalen der fraktalen Struktur, nicht aber durch das Anlegen der Eigenfrequenz. Der Schlüssel bei der Suche nach den korrekten anregenden Frequenzen liegt somit in der Skalierung innerhalb der fraktalen Wirbelstruktur. Hier steht eine Auswertung der Meßdaten aus der Hydrodynamik an.

c. In der von mir gewählten Chronologie ist die Global-Scaling-Theorie die erste Theorie, die den Ansatz macht, das Raum-Zeit-Gefüge dimensional zu erweitern. Hartmut Müller spricht von drei sich überlagernden Häufigkeitsverteilungen auf der ln-Skala, und bringt darüber hinaus einige Betrachtungen zu einer stehenden Zeitwelle an. Dieser Ansatz weist schon auf einen 8-dimensionalen Raum hin, auch wenn dies von Müller so nicht formuliert und ausgearbeitet worden ist. Es erscheint mir sinnvoll, die Müller'sche Theorie mit TGD (topological geometrodynamics) abzugleichen. Die strukturelle Ähnlichkeit liegt auf der Hand. An dieser Stelle wäre auch die Atomic-Vortex-Theorie vergleichend mit einzubringen, da Müller insbesondere was die Wirbelbildung und fraktale Geometrien betrifft noch einige Defizite aufweist.

d. Zu guter Letzt möchte ich noch zu einer mathematischen Spielerei anregen. Die sumerische Mathematik basierte auf einem Hexadezimalsystem und war in der Lage, viele kosmische Größenverhältnisse in einfache mathematische Zusammenhänge zu bringen. Dies erinnert sowohl vom Denkansatz als auch vom Zahlensystem her stark an Hartmut Müller. Das sumerische mathematische System basierte vermutlich auf alt-ägyptischen Modellen, die ebenfalls einen höherdimensionalen Raum beschreiben.

In der Esoterik-Szene wird in diesem Zusammenhang viel über die „Blume des Lebens" diskutiert, die angeblich klar auf einen 8-dimensionalen Raum weist, die Dimensionen 9-12 werden vermutet, sowie eine dreizehnte, die als „Gott" bzw. als die alles speisende Energiequelle identifiziert wird. Die Literatur zur „Blume des Lebens" ist teilweise hoch-mathematisch und könnte unter Umständen als eine brauchbare Inspirationsquelle dienen. Auch Bayles basiert einen Teil seiner Theorien auf geometrische Vermessungen und Berechnungen zu den physikalischen Anomalien in den Pyramiden bei Kairo. Dies wäre sicherlich ein spannender Stoff für……..

3.3.3.1. Fachbereich Ingenieurswesen

Die Ideen von Daruish al Khoos zu einem Wirbelkraftwerk haben mir persönlich als Rätsel gedient, und wie ich meine, einen beachtlichen Erkenntnisprozeß ausgelöst. Vielleicht hat dieses Konzept damit seinen eigentlichen Sinn bereits erfüllt. Dennoch halte ich es für sinnvoll, die Machbarkeit eines solchen Vorhabens ingenieurstechnisch zu überprüfen.

3.3.3.2. Fachbereich Elektrotechnik

Um die ersten Früchte aus der Neue-Energie-Szene ernten zu können, bedarf es dringend einer schulwissenschaftliche Überprüfung und Begutachtung der Geräte von Slatko „Shad" Loncar und dem Ehepaar Correa. Darüber hinaus steht die Entwicklung zur Serienreife an. Bei Loncar läuft dies auf die Entwicklung von Knallgasgeneratoren für den Kfz-Betrieb hinaus. Bei der kanadischen Erfindung auf Systeme zur dezentralen Energieversorgung.

3.3.0.0. Elektrolyseverfahren

In einer Elektrolysezelle findet eine durch den elektrischen Strom erzwungene Redoxreaktion statt. Dabei wird elektrische Energie in chemische Energie umgewandelt, die in den Elektrolyseprodukten Wasserstoff und Sauerstoff gespeichert wird. Bei der Elektrolyse tauchen zwei Elektroden, die an eine Gleichstrom-Spannungsquelle, die bei uns durch die Solarzellen etwa 13 Volt und 300mA oder – umschaltbar – 5 Volt und 1200mA beträgt, angeschlossen sind, in Schwefelsäure eintaucht.

Im Wasser liegt ein geringer Anteil der Wasserteilchen (H2O) in Form von Ionen vor, einmal dem Wasserstoff-Ion (H+) und andererseits dem OH--Ion.

Diese Ionen werden von der jeweils entgegengesetzt geladenen Elektrode angezogen:

An der Kathode - der negativen Elektrode - wird an das H+-Ion ein Elektron abgegeben, womit zwischenzeitlich ein Wasserstoff-Atom entsteht. Dieses verbindet sich schnell mit einem weiteren Wasserstoffatom zu einem Wasserstoffmolekül H2; viele Wasserstoffmoleküle steigen dann als Gasblasen an der Elektrode auf und können gesammelt werden.

An der Anode - der positiv geladenen Elektrode - werden, vereinfacht dargestellt, zwei OH--Ionen zwei Elektronen abgenommen und zu einem Sauerstoffatom und ein Wassermolekül umstrukturiert. Zwei Sauerstoffatome bilden wiederum ein Sauerstoffmolekül, welches dann im Verbund mit anderen Sauerstoffmolekülen als Gasblase an der Anode aufsteigt, dort ebenfalls gesammelt werden kann.

Dieses Elektrolyseverfahren, welches in der technischen Praxis wesentlich komplexer wird, stellt die Schlüsselrolle bei der Herstellung des Wasserstoffs in einer Wasserstoffwirtschaft dar. Die technischen Komplizierungen sind die geeignete Wahl des Elektrodenmaterials, des Elektrolyten und die Wahl der richtigen Betriebsbedingungen. Der Wirkungsgrad der Elektrolyse des Wassers liegt in optimierten Anlagen bei etwa 60-80%, je nach den Ausführungen der Elektrolysezellen und den physikalisch-chemischen Bedingungen der Elektrolyse.

Bei der Elektrolyse tauchen zwei Elektroden, die an eine Gleichstrom-Spannungsquelle, die z. B bei Solarzellen etwa 13 Volt und 300mA oder – umschaltbar – 5 Volt und 1200mA beträgt, angeschlossen sind, in Schwefelsäure eintaucht.

Im Wasser liegt ein geringer Anteil der Wasserteilchen (H2O) in Form von Ionen vor, einmal dem Wasserstoff-Ion (H+) und andererseits dem OH-Ion.

Diese Ionen werden von der jeweils entgegengesetzt geladenen Elektrode angezogen:

An der Kathode - der negativen Elektrode - wird an das H+-Ion ein Elektron abgegeben, womit zwischenzeitlich ein Wasserstoff-Atom entsteht. Dieses verbindet sich schnell mit einem weiteren Wasserstoffatom zu einem Wasserstoffmolekül H_2; viele Wasserstoffmoleküle steigen dann als Gasblasen an der Elektrode auf und können gesammelt werden.

An der Anode - der positiv geladenen Elektrode - werden, vereinfacht dargestellt, zwei OH--Ionen zwei Elektronen abgenommen und zu einem Sauerstoffatom und ein Wassermolekül umstrukturiert. Zwei Sauerstoffatome bilden wiederum ein Sauerstoffmolekül, welches dann im Verbund mit anderen Sauerstoffmolekülen als Gasblase an der Anode aufsteigt, dort ebenfalls gesammelt werden kann.

Die technischen Komplizierungen sind die geeignete Wahl des Elektrodenmaterials, des Elektrolyten und die Wahl der richtigen Betriebsbedingungen. Der Wirkungsgrad der Elektrolyse des Wassers liegt in optimierten Anlagen bei etwa 60-80%, je nach den Ausführungen der Elektrolysezellen und den physikalisch-chemischen Bedingungen der Elektrolyse. Und das ist viel zu wenig, um wirtschaftlich zu sein!

Das Sauerstoff-Wasserstoff-Verhältnis von 1:2 ist nur bei folgenden Elektrodenreaktionen zu erwarten:

Anode: $2 OH^- \rightarrow H_2O + 1/2\, O_2 + 2 e^-$
Kathode: $2 H^+ + 2e^- \rightarrow H_2$
Bruttoreaktion: $H_2O \rightarrow 1/2\, O_2 + H_2$

Bei der hohen Spannung, mit der an den Versuchen gearbeitet wurde, kommt es aber zu Elektrodenreaktionen, wie z.B. diesen:

Anode: $2 H_2O \rightarrow H_2O_2 + 2 H^+ + 2 e^-$
Katode: $2 H^+ + 2e^- \rightarrow H_2$
Bruttoreaktion: $2H_2O \rightarrow H_2O_2 + H_2$

Bei dieser Reaktion wird der Sauerstoff im Wasser nicht zum elementaren Sauerstoff oxidiert, sondern nur zur Oxidationsstufe -1. Anstelle von gasförmigem Sauerstoff entsteht also flüssiges Wasserstoffperoxyd. Da an der Katode immer noch dieselbe Elektrodenreaktion abläuft, verringert sich dadurch natürlich das Verhältnis der gebildeten Volumina von Sauerstoff und Wasserstoff. Wenn Sie den Versuch lange genug laufenlassen, dann müßte sich das Volumenverhältnis übrigens durch folgende Elektrodenreaktion zugunsten des Sauerstoffs verschieben:

Anode: $H_2O_2 \rightarrow O_2 + 2 H^+ + 2 e^-$
Katode: $2 H^+ + 2e^- \rightarrow H_2$
Bruttoreaktion: $H_2O_2 \rightarrow O_2 + H_2$. Die Platinelektroden oxidieren.

3.3.1.0. Dampfelektrolyse - Hochtemperatur

Gegenüber der klassischen Wasserelektrolyse bietet dieses Elektrolyseverfahren aufgrund günstiger thermodynamischer und kinetischer Reaktionsbedingungen erhebliche Vorteile. Hier erfolgt die Spaltung eines Wassermoleküls im „Dampf“, wodurch weit weniger Energie als im flüssigen Wasser benötigt wird, und dieser Energiebedarf nimmt mit steigender Betriebstemperatur auch noch ab.

Ein großer Nachteil besteht derzeit noch darin, daß es den Einsatz völlig neuer Technologien unter Verwendung keramischer Hochtemperatur-Werkstoffe erforderlich macht.

Bei dieser Elektrolyse wird ein fester Elektrolyt (Sauerstoff-Ionen-leitende Elektrolytmembran) bestehend aus Yttium - stabilisiertem Zirkonoxid (YSZ) eingesetzt, der mit geeigneten porösen Elektroden beschichtet ist. Legt man eine Gleichspannung an und führt der Kathodenseite Wasserdampf zu, so wird der Dampf an der Grenzfläche Kathode/Elektrolyt gespalten. Der entstehende Wasserstoff reichert sich im Dampf an, während der Sauerstoff in Form von Ionen zur Anode wandert, wo er entladen und freigesetzt wird. Wasserstoff und Sauerstoff bleiben durch die gasdichte YSZ-Membran voneinander getrennt. Die Betriebstemperatur dieses Prozesses liegt aufgrund der elektrischen Leitfähigkeit des YSZ bei ca. 1.000°C. Bei diesen hohen Arbeitstemperaturen zwischen 900 und 1.000°C spalten sich die Wassermoleküle nicht durch Elektrolyse, sondern auch durch Thermolyse, d.h. aufgrund der hohen Temperatur.

In bezug auf die konventionellen und fortschrittlichen Elektrolysetechniken sind beträchtliche Stromeinsparungen möglich, wenn man die Energie für die Wasserverdampfung und das Aufheizen des Dampfes nicht mit Strom, sondern aus einer getrennten Wärmequelle versorgt. Was den Wirkungsgrad dieses Verfahrens betrifft, liegen derzeitig labormäßige Werte bis 93% vor.

Die Kopplung dieses Verfahrens mit der Auspuffwärme könnte zukünftig von großer Bedeutung sein.

3.3.2.0. Solarthermischen Wasserstoffproduktion

Bei der solarthermischen Wasserstoffproduktion stellt man Knallgas solar her in dem man die Sonneneinstrahlung mittels Sonnenkollektoren, die heute bereits einen relativ hohen Wirkungsgrade erreichen - typischerweise zwischen 60 und 75 Prozent, in nutzbare thermische Energie und im weiteren Schritt in elektrische Energie umwandelt und diese elektrische Energie dann zur Knallgaserzeugung mittels Elektrolyse verwendet.

Eine IEA-Studie im Jahre 2005 ermittelte einen weltweiten Energiebeitrag der Solarthermie von 70 Gigawatt. Also ein gigantische Energiemenge, die man mittels Sonnenkollektor relativ problemlos einfangen kann, damit wäre auch eine große Menge Knallgas mehr oder weniger „kostenlos“ erzeugbar.

Solar Energy Conversions of Water, in „Platin “1976

Photochemical Cleavage with a ruthenium complex seems also possible

Prof. David G. Whitten, Chem. Dep. in the University of Carolina/USA, found that by reacting the ruthenium complex tris (2, 2‘-bipyridine) ruthenium (II)2+ with dioctadecyl or dihydrocholesteryl esters to long-tailed surfactant complexes insoluble in water, these can effectively promote cleavage.
Spread as a monolayer on sheets on glass, in contact with water and irradiated by light, these complexes give rise to a steady stream of molecular hydrogen and oxygen.

This novel mean of solar energy conversion (efficiency of 10 %) is extremely promising.

3.3.2.2. Eidg. techn. Hochschule in Zürich

Wissenschaftler in der Schweiz haben eine Technologie entwickelt, die einen bedeutsamen Beitrag zur künftigen Energieversorgung leisten könnte, ohne das Klima mit Treibhausgasen zu belasten.

Theoretisch wäre nur ein Tausendstel der festen Erdoberfläche erforderlich, um mittels Solaranlagen (Wirkungsgrad = 20%) den gegenwärtigen Energiebedarf aller Erdenbewohner zu dekken. Da die Sonne nicht permanent scheint und die Intensität der Strahlung geographisch variiert, muß die Sonnenenergiekonzentriert und in chemische Energieträger umgewandelt werden, die sich lagern und transportieren lassen. Mit diesen solaren Brennstoffen ließe sich eine kontinuierliche Energieversorgung ohne Ausstoß von Treibhausgasen und anderen Schadstoffen darstellen. Bei Temperaturen von über 2500 °C könnte man Wasserstoff (H2) aus Wasser (H2O) mit einem Prozeß namens Thermolyse nach der einfachen Gleichung H2O □ H2 + 1/2O2 herstellen. Diese direkte Wasserspaltung wäre zwar elegant, aber es gibt noch keine Technik zur sicheren Trennung des Wasserstoffs vom Sauerstoff, um ein explosives Gasgemisch (Knallgas) zu verhindern. Man umgeht das Problem durch thermochemische Kreisprozesse mit Wasserspaltung, auf der Basis von sogenannten Metalloxid –Redox - Systemen. Im ersten, endothermen Schritt wird Zinkoxid (ZnO) bei einer Temperatur von rund 2000 °C zu Zink und

Sauerstoff reduziert: ZnO > Zn + ½ O2. Im zweiten, exothermen Schritt läßt man Zink bei etwa 600 °C mit Wasserdampfreagieren, wobei reiner Wasserstoff frei entspricht somit Gleichung 1. Da Wasserstoff und Sauerstoff in verschiedenen Schritten anfallen, müssen die beiden Gase nicht getrennt werden. Der Energieumwandlungswirkungsgrad liegt über 40%. Der erzeugte Wasserstoff ist sauber und kann beispielsweise direkt in Brennstoffzellenverwendet werden. Technische Umsetzung: Die eingangs dargelegten Zusammenhänge sind seit langem bekannt. Was fehlte, war die entsprechende Technik zur Durchführung der Prozesse. Mit der vorliegenden Entwicklung ist die Lücke geschlossen. Zur Erzeugung der hohen Temperaturen für die Reduktion von Zinkoxidgemäß Gleichung 2 kommt ein Solarofen nach dem neuesten Stand der Technik zum Einsatz, mit dem sich Temperaturen von über 2000 °C bei maximalen Energieflußdichte von über 5 MW/m2 erreichen lassen. Die Reduktion des Zinkoxids erfolgt in dem in Bild 1 gezeigten Solarreaktor. Er besteht aus einem rotierenden Hohlraum-Receiver, dessen Wand infolge der Zentrifugalkraft mit einer pulverförmigen Zinkoxid-Schicht bedeckt ist, die der hochkonzentrierten Solarstrahlung bei Temperaturen von2000 °C ausgesetzt wird. Die dabei entstehenden Produktgase werden anschließend rasch abgekühlt, um eine Rückreaktion von Zink und Sauerstoff zu unterbinden. Ebenfalls entwickelt ist der Hydrolyse - Reaktor, in dem die exotherme Reaktion gemäß Gleichung 3 abläuft. Die Zink- Nanopartikel mit ihrer großen spezifischen Oberfläche hydrolysieren vollständig zu Zinkoxid und Wasserstoff. Damit sind alle Einrichtungen vorhanden, um Wasserstoff aus Wasser und Sonnenenergie zu gewinnen. Diese Technik eignet sich auch für solare Hybridprozesse, um aus fossilen Brennstoffen mitkonzentrierter Sonnenenergie Wasserstoff zu produzieren, der sauberer ist als die ursprünglichen fossilen Brennstoffe. Herkunft, Entwicklungsstand, Schutzrechte: Die Technologie stammt aus der Kooperation zweier bekannter Forschungsinstitute in der Schweiz. Die Tauglichkeit des Verfahren wurde im nah-industriellen Maßstab erfolgreich nachgewiesen. Gegenwärtig wird in Israel eine Pilotanlage mit 300 kW solarer Leistung getestet.

Obwohl die Entwicklung weit fortgeschritten ist, wird es noch etwas dauern, bis die neue Technologie zur Herstellung solarer Brennstoffe aus Sonnenlicht und Wasser für kommerzielle Anwendungen in großem Maßstab einsatzbereit ist. Es bestehen jedoch gute Aussichten, daß die solaren thermo-chemischen Technologien mit den konventionellen, auf fossilen Energieträgern basierenden Verfahren konkurrieren können, vor allem wenn man die externen Kosten für die Verbrennung fossiler Brennstoffe berücksichtigt. Da es um eine Schlüsseltechnologie mit erheblichen Auswirkungen auf künftige Energieszenarien geht, sind Anlagenbauer und Energieunternehmen gut beraten, bereits jetzt mit den Entwicklern in Kontakt zu treten, um frühzeitig am Start zu sein, wenn es um den Eintritt in interessante neue Märkte geht. Sowohl der Prozeß als auch die erforderlichen Reaktoren und Komponenten wurden international zum Patent angemeldet. Kooperationsmöglichkeit: Weiterentwicklung der Technologie bis zur Serienreife in Zusammenarbeit mit den Instituten und nachfolgende Lizenzen für Bau und Betrieb der Anlagen zur Wasserstoffgewinnung.

Ansprechpartner:
Frau Dr. Silke Meyns Tel.: 0041 44 632 2092; >>> E-Mail: silke.meyns@sl.ethz.ch

3.3.2.3. Von der Universität Bremen ein Heizdrahtverfahren

http://10.128.254.18/www.iup.physik.uni-bremen.de/troposphere/diplom/stoebener/img52.gif

Bei diesem Prinzip wird Wasserstoff beim Umströmen eines Heizdrahts aufgespalten. Dazu strömt synthetische Luft durch ein Reaktionsrohr, in dem sich ein zweites Rohr befindet, an dessen Ende ein Heizdraht angebracht ist. Durch das innere Rohr wird ein Gemisch aus molekularem Wasserstoff und Helium geleitet, so daß am glühenden Heizdraht atomarer Wasserstoff gebildet wird. Da sich der Heizdraht am Ende des inneren Rohrs befindet, kommt es direkt dahinter zur Peroxyradikalproduktion durch die Reaktion der Wasserstoffatome mit Luftsauerstoff aus dem äußeren Rohr.

Die Menge der gespaltenen Wasserstoffmoleküle am Heizdraht ist unbekannt, weshalb die Radikalkonzentration ebenfalls unbekannt ist.

Weißenmayer, 1989 und 1994 hat diese Quelle verwendet und versucht, sich die Eigenreaktion der Radikale zunutze zu machen, um die Radikalkonzentration zu bestimmen. Das innere Rohr ist so eingebaut, daß es beweglich in Richtung der Längsachse des äußeren Rohrs ist. Durch unterschiedliche Positionierung des inneren Rohrs können verschiedene Reaktionszeiten für die Radikaleigenreaktion vor der Messung durch den Radikaldetektor erreicht werden.

Da es sich bei der Eigenreaktion um eine Reaktion zweiter Ordnung handelt, müßten die inversen gemessenen Signale des Detektors aufgetragen gegen die Zeit eine Gerade mit einer Steigung proportional zur Reaktionsrate der Eigenreaktion ergeben. Das erwartete Verhalten ist jedoch nicht zu beobachten. Die Ergebnisse sprechen deutlich für einen Radikalverlust 1. Ordnung, was einer Verlustreaktion der Radikale an der Wand entspricht.

Dieses Quellenprinzip ist deshalb für die Kalibrierung eines Detektors bei bodennahen Bedingungen (p=1013 hPa) nicht zu verwenden, da die Wandverlustrate deutlich größer ist als die Verlustrate der Radikale durch Eigenreaktion. Nur bei Radikalkonzentrationen, die mehrere Größenordnungen über den atmosphärisch erwarteten Werten liegen, beginnt der Verlust durch Eigenreaktion für diesen Aufbau zu dominieren.

3.3.3.0. Mittels Sonnenlicht

Japanische Chemiker haben aus Wasser mit Hilfe von Sonnenlicht mehr Wasserstoff produziert als bisher möglich war.
Die beste Resultate erzielten die Forscher mit einem Katalysator bestehend aus Titandioxid, dem sie Spuren von Platin beigefügt hatten. Als die Forscher zusätzlich Soda (wie im Waschmittel) im Wasser lösten, stieg die Wasserproduktionsrate sprunghaft an; gleichzeitig wurde Sauerstoff freigesetzt.

Warum das Soda diese überraschende Wirkung hatte, haben die Wissenschaftler bisher noch nicht herausgefunden (New Scientist, Nr. 1825, S. 15)

3.4.0.0. Thermolyse Verfahren

Thermolyse bedeutet generell die Spaltung chemischer Verbindungen durch Hitze – mikroskopisch gesehen die Auftrennung von Molekülen in Atome der sie bildenden chemischen Elemente.

Das industriell ungelöste Problem einer rein thermischen Wasserspaltung war und ist die Abtrennung des Wasserstoffes und Sauerstoffes unter Prozeßbedingungen und damit insbesondere die Vermeidung der Rekombination.

Generell kann eine rein thermomagnetische Wasserspaltung unter Ausnutzung des Paramagnetismus von O_2 (H_2 und H2O sind diamagnetisch) bei wesentlich niedrigeren Temperaturen ablaufen als die rein thermische Spaltung. Jedoch ist zu deren Durchführung eine magnetische Feldstärke von $>10^4$ Tesla erforderlich, die derzeit (noch?) nicht herstellbar ist.

Das Wasserstoffmolekül ist stabil. Normalerweise beginnen sich die einzelnen Moleküle erst im Dampf und um die 2000 Grad Celsius in Wasserstoff und Sauerstoff aufzutrennen und erst über 3.500 Grad Celsius haben sich alle Moleküle gespalten, die Wärmeschwingungen der Atome im Molekül sind so stark geworden, daß sie die molekularen Anziehungskräfte übersteigen.

3.5.0.0. Microwave based water splitting

Radiowellen > magnetische Wellen zur Energieerhöhung im Brennraum verwenden um die Thermolyse bei geringeren Temperaturen in Gang zu setzten.

Achtung:
Eine modifizierte, geöffnete Mikrowelle stellt eine genehmigungspflichtige Sendeeinrichtung dar. Eine solche Genehmigung würde aber schwer erteilt werden, weil die Strahlungsgrenzwerte erheblich überschritten sind.

Überhaupt sollten Sie wissen, was Sie tun, ein Magnetron ist absolut nichts für Elektronik-Anfänger. Mikrowellen in konzentrierter Form sind extrem gefährlich und können zu schwersten Verbrennungen und Erblindung durch Netzhautablösung führen.

Wegen der Eigenfrequenz der Wasserdipole arbeiten praktisch alle Mikrowellenherde auf mehr oder weniger exakt 2,455 GHz und 500 Watt und mehr. Das erzeugt die Reibung der Wassermoleküle und ergibt damit die rasche Erwärmung des Mikrowellengutes.

3.5.0.1. Info Magnetron

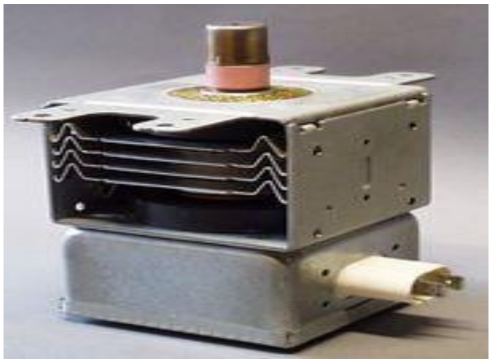

Magnetron das Herzstück eines Mikrowellenherdes

Der Physiker Heinrich Greinacher entwickelte vor 1912 eine Röhre, um das Verhältnis zu messen und stellte die grundlegenden mathematischen Gleichungen auf. Die Röhre funktionierte aufgrund unzureichenden Vakuums in ihrem Inneren und ungenügender Elektronenemission nicht. Der Physiker Albert W. Hull aus den USA nutzte die Veröffentlichung von Greinacher, erweiterte die Theorie der Flugbahnen von Elektronen im Magnetron, verbesserte die Röhre und gab ihr den Namen. Hull entwickelte bei der Firma General Electric (GEC) 1921 das erste funktionierende Magnetron, welches aus mehreren koaxialen, zylinderförmig angeordneten Anodenwänden (engl. split-anode magnetron) und einer Kathode bestand. Durchsetzt wird die Anordnung von einem longitudinalen magnetischen Feld durch eine externe Spule. Ausgangsziel war es, ein magnetisch gesteuertes Relais bzw. Verstärker zu bauen mit der Möglichkeit, das Magnetron als HF-Generator zu nutzen. Sie sollten den Steuerelektroden der Firma Western Electric Co. Konkurrenz machen.

Eine davon unabhängige Entwicklung fand 1921 durch Erich Habann in Jena und August Žáček in Prag statt. Habann entwickelte ein Magnetron, das Frequenzen von 100 MHz erzeugte. Der wesentliche Unterschied zu dem Magnetron von Hull bestand darin, daß Habann (wie in heutigen Magnetrons) ein magnetisches Gleichfeld verwendete. Die Bedingungen, um die Dämpfung (durch Resonanz entstehende Schaltungsverluste) zu bewältigen, konnte Habann präzise vorausberechnen. Auf Grundlage der Berechnungen erzeugte Habann einen negativen differentiellen Widerstand. Žáček konnte durch die massive Zylinder-Anode Frequenzen von 1 GHz erreichen. Durch Schlitze in der Anode schaffte Kinjirō Okabe an der Universität Tōhoku in Sendai (Japan) 1929 mit Frequenzen von 5,35 GHz den Durchbruch für Magnetrons im Zentimeter-Wellenbereich. Am 27. November 1935 meldete Hollmann ein Patent für das Vielschlitz-Magnetron an, welches ihm als Patent 2.123.728 am 12. Juli 1938 gewährt wurde.

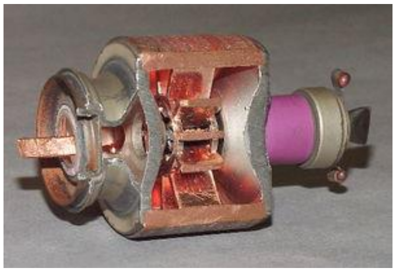

Magnetron eines Mikrowellenherdes im Längsschnitt (Magnete und Kühlrippen entfernt)

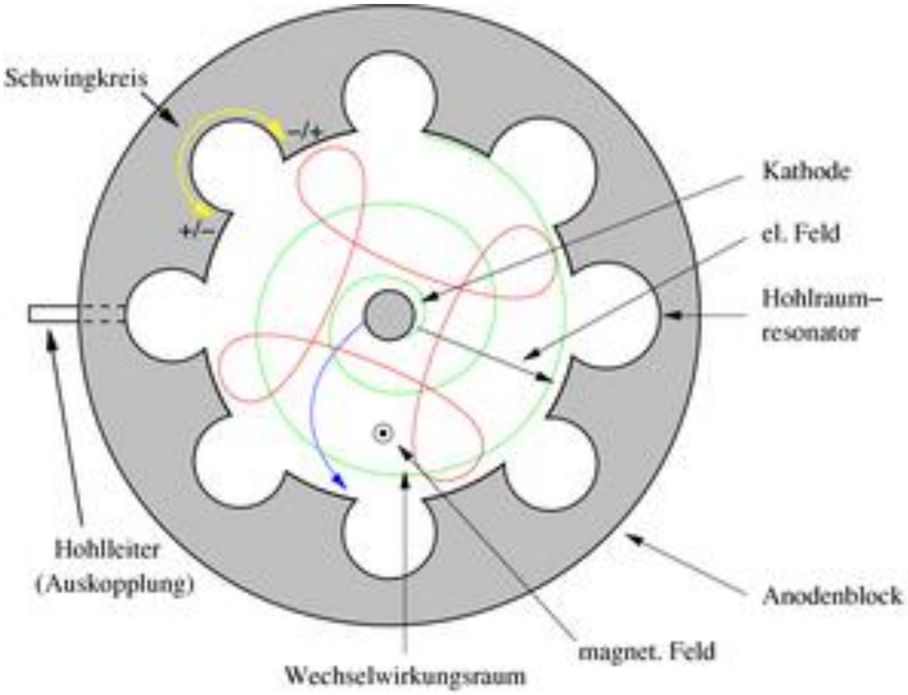

Magnetron schematisch

Das **Magnetron** ist eine Vakuum-Laufzeitröhre zur Schwingungserzeugung im Mikrowellenbereich (ca. 0,3 bis 300 GHz). Magnetrons haben einen Wirkungsgrad von bis zu 80 % und sind somit sehr effiziente, preiswerte HF-Generatoren. Die Leistung und der Frequenzbereich werden maßgeblich durch die Konstruktion bestimmt. Man unterscheidet kontinuierlich arbeitende (Dauerstrich-)Magnetrons und Impuls Magnetrons. Im Dauerstrichbetrieb können einige kW und im Impulsbetrieb mehr als 10 MW erzielt werden.

Aufbau

Das Magnetron besteht aus einer walzenförmigen Glühkathode (Oxid- oder Vorratskathode) im Zentrum. Meist bildet der Heizdraht selbst die Kathode (sog. direkt beheizte Kathode). Sie ist von einem massiven, zylinderförmigen Anodenblock (meist Kupfer) umschlossen. Kühlrippen am Anodenblock ermöglichen Kühlung durch freie Konvektion oder ein Gebläse. In der Innenseite des Anodenblocks befinden sich frequenzbestimmende Hohlraumresonatoren. Es handelt sich meist um strahlenförmige, zum Heizdraht parallel verlaufende Schlitze (sog. Schlitz Magnetron), die in Richtung der zentralen Bohrung des Anodenblocks, dem sogenannten Wechselwirkungsraum, offen sind.

Andere Ausführungsformen der Hohlraumresonatoren sind: Lochresonator, Segmentresonator (Kreis Typ), Mehrfrequenzresonator (Rising-Sun-Typ).

Das Magnetron benötigt zur Funktion ein axiales Magnetfeld, welches meist mit Dauermagneten erzeugt wird. Einer der Hohlraumresonatoren ist mit einer Kopplungsschleife oder mit einem Hohlleiter verbunden und dient der Leistungsentnahme.

Wirkungsweise

Im Wechselwirkungsraum wirken elektrische und magnetische Felder gleichzeitig. Die Magnetfeldlinien verlaufen parallel zur Kathodenachse und durchsetzen den Wechselwirkungsraum. Liegt Spannung zwischen Anode und Kathode an, werden aufgrund des elektrischen Feldes Elektronen hin zur Anode beschleunigt.

Wirkung der elektromagnetischen Strahlung eines Magnetrons auf eine DVD

Das elektrische Feld bildet jedoch mit dem Magnetfeld einen rechten Winkel, daher werden die Elektronen aufgrund der Lorentzkraft von ihrer radialen Bahn spiralförmig abgelenkt. Dadurch bewegen sie sich im Wechselwirkungsraum um die Kathode herum. Erst ab einer recht hohen Anodenspannung kommt es zum Stromfluß.

Die Schlitze bilden eine ringförmig geschlossene Verzögerungsleitung: Elektromagnetische Schwingungen in einem Hohlraumresonator breiten sich über den Wechselwirkungsraum und die Schlitze in die anderen Hohlraumresonatoren aus. Es entsteht ein ringförmig geschlossener mehrpoliger elektromagnetischer Schwingkreis. In ihm treten Wechselspannungen zwischen den Enden der Anodensegmente und auch Wechselströme an den inneren Oberflächen der Schlitzwände auf. Das HF-Feld in diesem Ringresonator tritt mit den Elektronen in Wechselwirkung. Die resultierenden Felder beeinflussen Bahn und Geschwindigkeit der Elektronen. Die Folge ist, daß Elektronen gebremst oder beschleunigt werden und sich dadurch während ihres Umlaufes Bereiche höherer und niedrigerer Elektronendichte bilden. Diese Elektronenwolken verstärken ihrerseits die HF-Schwingungen des Ringresonators – es tritt Selbsterregung ein. Wird die kinetische Energie eines Elektrons zu klein, so tritt es in den Anodenblock ein und ein anderes tritt aus der Kathode aus.

Heizung der Kathode

Sobald das Magnetron durch Anlegen der Anodenspannung in Betrieb genommen wird, fällt ein kleiner Teil der Elektronen auf die Kathode zurück und wird in Wärmeenergie umgewandelt. Dann muß der Heizstrom für die Kathode reduziert werden, um die Überhitzung zu vermeiden.

Anwendungen

Einsatzgebiete von Dauerstrich-Magnetrons sind hauptsächlich industrielle Erwärmung und Trocknung (HF-Heizung), Plasmaerzeugung und der Mikrowellenherd. Auch in Schwefellampen dient ein Magnetron zur Plasmaerzeugung. Impuls-Magnetrons werden in Impuls-Radargeräten zur Erzeugung der Sendeimpulse verwendet. In EMP-Waffen werden ebenfalls Impuls-Magnetrons verwendet: hierbei wird mittels gerichteter HF-Energie gegnerische Elektronik zerstört. Funkamateure verwenden Magnetrons zur Erde-Mond-Erde-Kommunikation.

Literatur

- Heinrich Greinacher: in: *Verhandlungen der Deutschen Physikalischen Gesellschaft*, Heft 14 (1912), S. 856

- Albert W. Hull: *The Measurement of Magnetic Fields of Medium Strength by Means of a Magnetron*, in: *Physical Review*. Heft 22 (1923), S. 279–292 Physical Review Online Archive PROLA

- Erich Habann: *Eine neue Generatorröhre*, in: *Zeitschrift für Hochfrequenztechnik. Jahrbuch der drahtlosen Telegraphie und Telephonie, Band 24*. Krayn, Berlin 1924, S. 115ff. (zugleich Dissertation der Universität Jena, 1924)

- August Žáček:?, in: *Časopis pro pěstování matematiky a fysiky*, Heft 53 (1924), S. 378

- Hans Erich Hollmann: *Physik und Technik der ultrakurzen Wellen. Band 1. Erzeugung ultrakurzwelliger Schwingungen*. Springer, Berlin 1936, Kapitel 4

Die Geschichte der Mikrowelle

Die Historie der Mikrowellentechnik erscheint wie das Musterbeispiel einer wissenschaftlichen Entwicklung. Wie bei vielen technischen Innovationen waren die Motivation zur Entwicklung der technischen Grundlagen zur Erzeugung von Mikrowellen militärische Interessen. Bereits 1939 entwickelten die englischen Wissenschaftler John Randall und Harry Boot die Kernkomponente zur Mikrowellenerzeugung, das Magnetron, für den Bau kurzwelliger Radargeräte. Zwei Jahre später setzte die Royal Air Force die neuen Radargeräte in Flugzeugen ein, und das Magnetron wurde zu einem wichtigen Kriegsgeheimnis der Engländer.

Bei der Perfektionierung des Magnetrons wurde trotz ihrer geringen Größe auch die Firma Raytheon, ein amerikanischer Hersteller von elektrischen Röhren, durch eine Empfehlung des MIT in die Forschungen einbezogen. Da einer der Ingenieure von Raytheon, Percy L. Spencer, den Herstellungsprozess der Magnetronröhren maßgeblich verbessern konnte, bekam Raytheon einen Vertrag für die Herstellung der Magnetronröhren und mauserte sich schließlich zu deren wichtigstem Hersteller.

Die Erkenntnis, daß sich Mikrowellen nicht nur für militärische Zwecke, sondern auch im Haushalt zum Kochen eignen, geht auf eine der klassischen Zufallsentdeckungen zurück. Nachdem 1945 bei einem Experiment ein Schokoriegel in der Tasche von Spencer zu schmelzen begann, experimentierte der Ingenieur mit der Erhitzung anderer Lebensmitteln durch Mikrowellenstrahlung. Nur zwei Jahre später wurde der erste Mikrowellenherd "Radarange" vorgestellt, der mit einem Preis von über 2.000 Dollar zunächst aber nur wenig verkauft wurde. Erst mit den ersten Tischgeräten, die Mitte der 60er auf den Markt kamen und weniger als 500 Dollar kosteten, konnte die Mikrowelle ihren Siegeszug in der Küche antreten.

Auch wenn in chemischen Labors mit der Mikrowellentechnik bereits in den späten 70er Jahren experimentiert wurde und Mitte der 80er Jahre erste Einsatzmöglichkeiten in der organischen Synthese erschlossen wurden, ist ein Durchbruch dieser Methode erst Ende der 90er Jahre zu verzeichnen. Trotz vielfältiger neuer Möglichkeiten insbesondere in der organischen Synthese lief die technische Entwicklung von auf den Laborbedarf zugeschnittenen Mikrowellen erst langsam an. Inzwischen sind jedoch verschiedene ausgereifte Laborgeräte erhältlich. Mit einer kontinuierlichen Senkung der Preise dieser Geräte ist zu erwarten, daß sich die Mikrowellentechnik auf Dauer gegen konventionelle Heizpilze und -platten durchsetzen wird, so wie diese es gegenüber dem Bunsenbrenner getan haben.

Das Magnetron läßt Dipole oszillieren - Das Funktionsprinzip

Die Kernkomponente bei der Mikrowellenerzeugung ist das Magnetron, das aus einer metallischen Vakuumröhre mit einem Permanentmagneten besteht. An einer Glühkathode werden Elektronen erzeugt, die durch das Magnetfeld auf eine Kreisbahn gelenkt werden. Durch die Kollision, mit der in periodischen Abständen eingeschnittenen Außenwand der Röhre wird, das elektrische Feld umgepolt und so Mikrowellen gewünschter Frequenz erzeugt.

Die Energie der erzeugten Mikrowellenstrahlung reicht aus, um Rotationszustände in dipolaren Molekülen auszulösen. Wenn das angelegte Feld mit der entsprechenden Frequenz oszilliert, versuchen sich die Moleküle in dem Wechselfeld auszurichten, wodurch Energie durch molekulare Reibung und dielektrische Verluste in Wärme umgesetzt wird. Eine dipolare Substanz, z. B. Wasser, wird dadurch schnell und in-situ aufgeheizt. Durch das Fehlen von Kontaktoberflächen, an denen die Wärme übertragen wird, können Lösungsmittel ohne Sieden überhitzt werden, wobei Temperaturen von bis zu 100 °C über dem Siedepunkt erreicht werden können.

Schnelle Synthesen - Mikrowellen im Einsatz in der Chemie

Nach der Faustregel, daß jede Temperaturerhöhung um 10 °C die Reaktionsgeschwindigkeit verdoppelt, wird bei der so genannten Microwave-Assisted Organic Synthesis (MAOS) eine Erhöhung der Reaktionsgeschwindigkeit erreicht. Tatsächlich lassen sich Reaktionen mittels Mikrowellentechnik sogar um den Faktor 100 oder 1000 beschleunigen und die Zeiten von Tagen auf Minuten verkürzen. Die dabei zugrundeliegenden Effekte sind noch nicht vollständig verstanden, da angenommen wird, daß zusätzlich nicht-thermische Effekte auftreten.

Bedingt durch diese Vorteile bieten mehrere Hersteller für die organische Synthese maßgeschneiderte Mikrowellensysteme an, die sich wachsender Beliebtheit erfreuen. Besonders im Bereich der Pharmaindustrie, die einen hohen Durchsatz an neuen organischen Verbindungen fordert, ist der Zeitvorteil gegenüber konventionellen Wegen ein wichtiges Argument für die Nutzung, so daß der Siegeszug der Mikrowelle nicht nur in der Küche enden wird.

Ich habe einen interessanten Artikel aus der Zeitschrift "New Energy Technologies" aus St. Petersburg gefunden, in der ein russischer Forscher über Eigenschaften eines Magnetrons berichtet. Laut seiner Erfahrung werden in Hochschulen immer versucht, den Energieumsatz beim Magnetron so zu erklären oder "hinzubiegen", daß stets eine Effizienz kleiner 100% rauskommt. In einem Experiment hätte man jedoch einmal ein Magnetron mit Permanentmagneten gebaut (die 1 Tesla erzeugen konnten).

Zur Theorie des Magnetrons hat nun **V.I. Korobeynikov** noch einen weiteren Artikel verfaßt. In diesem Beitrag beschreibt er, daß O/U nur dann auftreten kann, wenn die Elektronen auf einer Kreisbahn kreisen, das heißt, nicht auf die Anode treffen.

Nur dann ist der Anodenstrom Null und damit auch die Leistungsaufnahme Null. In diesem Betriebszustand treten dennoch Mikrowellen und vor allem Erwärmungseffekte auf. Bei einer Röhre mit Permanent-Magneten ist der Strom in diesem Betriebsfall noch 2-3 Mikroampere. Wenn man die Spannung von z.B. 65 V auf mehrere Hundert oder Tausenden Volt erhöht, werden einige Hundert Watt produziert bei einer Eingangsleistung von Null Watt!

Der Autor weist darauf hin, daß man das Magnetron im Dauerstrich (mit Gleichspannung) betreiben muß, damit man diesen Betriebszustand erreichen kann.

Die Beschleunigerspannung an der Anode braucht sowieso keinen Strom, so daß netto keinerlei Eingangsleistung hineingesteckt werden muß. Trotzdem funktionierte das Magnetron bestens, eine Spirale am Ausgang wurde rotglühend heiß, und man schätzte, daß hier etwa 300 W umgesetzt wurden (aus Nichts!). Allerdings wurden alle Details dieser Magnetron - Konstruktion 20 Jahre lang geheimgehalten. Heute scheint das Wissen darüber langsam in die Hirne einiger Autoritäten zu diffundieren, zumal selbst in einigen Schulen theoretische Berechnungen andeuten, daß bei Magnetrons mehr als 100% zu erwarten ist (auch bei Magnetfelderzeugung via Spulen). Der Autor meint, daß die irreguläre, nicht-lineare und periodische Bewegung der Elektronen etwas damit zu tun hat.

In diesem Beitrag beschreibt er, daß O/U nur dann auftreten kann, wenn die Elektronen auf einer Kreisbahn kreisen, das heißt, nicht auf die Anode treffen. Nur dann ist der Anodenstrom Null und damit auch die Leistungsaufnahme Null. In diesem Betriebszustand treten dennoch Mikrowellen und vor allem Erwärmungseffekte auf. Bei einer Röhre mit Permanent-Magneten ist der Strom in diesem Betriebsfall noch 2-3 Mikroampere. Wenn man die Spannung von z.B. 65 V auf mehrere Hundert oder Tausenden Volt erhöht, werden einige Hundert Watt produziert bei einer Eingangsleistung von Null Watt!

Messungen Anodenstrom gegenüber Spulenstrom bei z.B. 2000 mA Spulenstrom geht der Anodenstrom von 34 mA auf 1.2 mA zurück (bei 180 V Anodenspannung beträgt die Anodenleistung somit: 216 Watt). Im Detail heißt es:

Steigt der Betrag der magnetischen Feldstärke über ein kritisches Maß, so fällt der Anodenstrom in Folge der Bahnkrümmung stark ab. Die Elektronen erreichen die Anode nicht mehr. In diesem Fall müßte der Anodenstrom Null werden, doch in der Praxis wird der Anodenstrom nicht stark herabfallen, sondern es tritt in der B-I-Kennlinie nur ein Wendepunkt auf, da die Elektronen unterschiedliche Austrittsenergien größer Null haben und die Elektronenstöße mit dem Rest Gas in der Röhre vollführen und dadurch gestreut werden. Die kritische Feldstärke, bei der Elektronen eine komplette Kreisbahn beschreiben, ohne die Anode zu treffen (bei konstanter Anodenspannung., keine Pulse!) errechnet sich aus der Wurzel von 8*me * U / e*b2.Dabei ist me ist die Elektronenmasse, e die Elektronenladung, und b2 das Quadrat des Radius der Ringanode.

Wenn man übrigens Permanentmagneten einsetzt, braucht man gar keinen Spulenstrom und damit auch keine Spulenleistung, um das Magnetfeld zu erzeugen. Es stellt sich allerdings die Frage, ob ausreichend Mikrowellen erzeugt werden, wenn die Elektronen nur im Kreis herumfliegen. Durch die Kollision, mit der in periodischen Abständen eingeschnittenen Außenwand der Röhre wird das elektrische Feld umgepolt und so Mikrowellengewünschter Frequenz erzeugt.

Wenn also keine Kollisionen mit der Anode stattfinden, werden vermutlich auch keine (oder zu wenig Mikrowellen erzeugt, die auch Wärme produzieren kann)?

Was die Vermutungen des russischen Forschers betrifft, so sind diese sicherinteressant. Am besten wäre es wohl, wenn man mit einem Magnetron (aus dem Mikrowellenherd) experimentiert (eine Version mit Permanentmagneten). Man sollte dann wirklich reine Gleichspannung an die Anode anlegen (kein Halbwellen gleich gerichtete Wechselspannung) und versuchen, durch Spannungsvariation die Elektronen auf eine Kreisbahn zu zwingen, so daß der Anodenstrom minimal wird. Die Frage ist dann, ob dann noch genügend Mikrowellenleistung heraus kommt, was man ja aufgrund des Volumens und der Temperaturdifferenz erhitzten Wassers berechnen und in Relation zur Eingangsleistung stellen kann. Wenn man einen solchen Betriebszustand hat, kann man ja die Spannung auch mal takten (pulsen) und sehen, was sich dann verändert.

Durch die Kollision, mit der in periodischen Abständen eingeschnittenen Außenwand der Röhre wird, das elektrische Feld umgepolt und so Mikrowellengewünschter Frequenz erzeugt.

Die Ingenieure Chmela und Smetana hätten sicher Lust, mal ein solches Experiment zu machen. Dabei muß man natürlich immer sicher sein, daß keine schädliche Mikrowellenstrahlung nach außen dringt.

LINKS:

Leistungsmessung Magnetron, United States Patent 4,282,459 Magnetron-Patent mit Permanent Magneten.

http://jlnlabs.online.fr/plasma/gmr/

Plasma - Erzeugung mit Magnetrons http: www.faraday.ru/content21.html

Inhalt der russischen Zeitschrift "New Energy Technologies" mit Beitrag von Korobeynikov:
http://www.wvs-tech.de/wvs-tech/data/produkte/magnetrons/magnetrons.htm
Eine Firma für Mikrowellentechnik; http://www.pueschner.com/

Weitere Links: http://www.hcrs.at/MIKRO.HTM Versuche mit Magnetrons einer jungen Ingenieurin aus Wien

3.5.1.1. Chang Yul Cha Prozeß

US patent #: 6,592,723;   July 15, 2003
Inventor: Mr. Chang Yul Cha; 3807 Reynolds St. Laramie; WY (US) 82072;

The present invention provides a potentially economically viable process for the efficient microwave catalysis production of hydrogen involving a modified steam-reforming reaction using light hydrocarbons or light alcohols as the basic reactant with potentially supplementary oxygen to increase the efficiency. Such hydrogen-rich gas is potentially an economical fuel for fuel cells.

BACKGROUND OF INVENTION

1. Field of Invention

The present invention relates to a process using radiofrequency microwave energy to efficiently produce hydrogen from a source of hydrocarbons and oxygen with water.

2. Background

Clean energy production is a noble task and fuel cells are one important ingredient. Yet fuel cells require a hydrogen-rich gas, and the subject invention has the potential to supply this by utilizing the high efficiency of microwave catalysis in reforming commonly available fuels, such as light hydrocarbons including alcohols, into cost effective hydrogen.

Microwaves are a form of quantum radiofrequency (RF) energy that is based upon the phenomenon of resonant interaction with matter of electromagnetic radiation in the microwave and RF regions since every atom or molecule can absorb, and thus radiate, electromagnetic waves of various wavelengths. The rotational and vibrational frequencies of the electrons represent the most important frequency range. The electromagnetic frequency spectrum is usually divided into ultrasonic, microwave, and optical regions. The microwave region is from 300 megahertz (MHz) to 300 gigahertz (GHz) and encompasses frequencies used for much communication equipment. For instance, refer to Cook, Microwave Principles and Systems, Prentice-Hall, 1986.

Often the term microwaves or microwave energy is applied to a broad range of radiofrequency energies particularly with respect to the common heating frequencies, 915 MHz and 2450 Mhz The former is often employed in industrial heating applications while the latter is the frequency of the common household microwave oven and therefore represents a good frequency to excite water molecules. In this writing the term "microwave" or "microwaves" is generally employed to represent "radiofrequency energies selected from the range of about 500 to 5000 MHz", since in a practical sense this large range is employable for the subject invention.
The absorption of microwaves by the energy bands, particularly the vibrational energy levels, of atoms or molecules results in the thermal activation of the non-plasma material and the excitation of valence electrons. The non-plasma nature of these interactions is important for a separate and distinct form of heating employs plasma formed by arc conditions at a high temperature, often more often 3000.degree. F., and at much reduced pressures or vacuum conditions. For instance, refer to Kirk-Othmer, Encyclopedia of Chemical Technology, 3rd Edition, Supplementary Volume, pages 599-608, Plasma Technology. In microwave technology, as applied in the subject invention, neither of these conditions is present and therefore no plasmas are formed.

Microwaves lower the effective activation energy required for desirable chemical reactions since they can act locally on a microscopic scale by exciting electrons of a group of specific atoms in contrast to normal global heating which raises the bulk temperature. Further this microscopic interaction is favored by polar molecules whose electrons become easily locally excited leading to high chemical activity; however, non-polar molecules adjacent to such polar molecules are also affected but at a reduced extent. An example is the heating of polar water molecules in a common household microwave oven where the container is of non-polar material, that is, microwave-passing, and stays relatively cool.

In this sense microwaves are often referred to as a form of catalysis when applied to chemical reaction rates. In this writing the term "microwave catalysis" refers to "the absorption of microwave energy by carbonaceous materials when a simultaneous surface chemical reaction is occurring." This gives rise to two slightly different forms of microwave catalysis. The first employs a carbonaceous material with a large internal pore surface to act as a chemical reaction surface. Activated carbon is a good example of this medium. The second form involves the use of conventional catalysts with carbonaceous material physically near this surface, and now the reaction occurs on the catalyst surface, while localized molecular energizing happens in close proximity. A good example of this is the use of silicon carbide either embedded in the catalyst substrate or alternately finely mixed with catalyst material. The subject invention employs both forms of microwave catalysis. For instance, refer to Kirk-Otimer, Encyclopedia of Chemical Technology, 3rd Edition, Volume 15, pages 494-517, Microwave Technology.

Related United States patents include:

U.S. Pat. No. Inventor Year:

4,869,894 Wang, et al. 1989
5,164,054 Cha et al.-1 1992
5,198,084 Cha et al.-2 1993
5,256,265 Cha 1993

Referring to the above list, Wang et al. disclose conventional hydrogen production involving natural gas primary reforming and oxygen secondary reforming utilizing high temperatures above 1650.degree. F. No mention of microwave energy is made.

Cha et al.--1 disclose a process for hydrogen production employing radiofrequency energy with carbon black and hydrocarbon gases, particularly from mild gasification of coal. No oxygen is employed or suggested.

Cha et al.--2, related to Cha et al.--1, disclose a process for hydrogen production employing radiofrequency energy with char and a hydrogen-containing gas, such as water or hydrocarbons, particularly from mild gasification of coal. No oxygen is employed or suggested.

Cha discloses char-gas oxide reactions, such as NOx decomposition, and presents the background for efficient microwave catalysis usage for chemical reactions. The specification of this patent is hereby incorporated by reference.

SUMMARY OF INVENTION

The objectives of the present invention include overcoming the above-mentioned deficiencies in the prior art and providing a potentially economically efficient process for the microwave production of hydrogen-rich gas for potentially fuel cell usage.

BRIEF DESCRIPTION OF THE DRAWINGS

FIG. 1 shows the process equipment utilized with the microwave cavity to produce hydrogen.

DETAILED DESCRIPTION OF INVENTION

Microwaves are a versatile form of energy that is applicable to enhance chemical reactions since the energy is locally applied by its largely vibrational absorption by polar molecules and further does not produce plasma conditions. Particularly reactions that proceed by free-radical mechanisms are often enhanced to higher rates because their initial equilibrium thermodynamics is unfavorable. A second class of enhanced reactions are those whose reaction kinetics appear unfavorable at desirable bulk temperature conditions.

Carbonaceous material is an excellent microwaves absorber since it has a wide range of polar impurities that readily interact with such radiofrequency energy especially in electron vibrational modes. Consequently, the waveguide design for the microwave cavity is not usually critical. Carbonaceous material for use with the subject invention commonly comprises activated carbon, char, soot, pyrolytic carbon, carbon black, activated charcoal, and metal carbides.
However, in gaseous systems temperature resistant carbonaceous materials, such as silicon carbide, are often prudent and are conveniently utilized as a microwave absorbing substrate when elevated temperatures are encountered and when employed in conjunction with conventional catalysts, such as oxidation catalysts.

The microwave excitation of the molecules of the carbonaceous material, referred to as microwave catalysis, excites constituents, such as chemical reaction components, which have been adsorbed on, or in some instances attracted to, the reaction surfaces and thus produces a highly reactive condition.

Using methane and methanol as typical examples, the chemical reactions employed to carry out the hydrogen production are:
Similar reactions occur for other alkanes and alkanols. In general, in this writing the term "light hydrocarbons" will be used to identify reactant molecules containing no more than six carbon atoms and may include, besides hydrogen, other atoms, such as oxygen. Some of these reactions are endothermic and require significant energy input to occur; thus, conventionally they are carried out at high temperatures. Conversely some are exothermic and so can partially provide necessary energy to keep total energy requirements down and improve efficiency. Further the use of microwaves keeps the overall bulk reaction temperature much lower than conventional steam-reforming processes.

When oxygen gas is present, Eqs. (1)-(4) represent a series of competing reactions that produce hydrogen from methane and burn methane for energy. Thus, to produce an efficient hydrogen-rich gas, fine tuning of the three reactants: methane, oxygen and water, and the reaction conditions, including the microwave power, is necessary. Other light hydrocarbons are employable, especially those commonly available and reasonable priced in order to keep the cost low.

When methanol is employed as shown in Eqs. (5)-(6), water, but no extra oxygen, is used since microwave catalysis decomposes the reactants. Other light alcohols, like ethanol, are employable if they are reasonably priced.

FIG. 1 shows a typical experimental microwave reactor 10 to produce hydrogen by microwaves using methane, oxygen, and steam. A microwave passing quartz tube 9 is packed with a bed 11 containing an oxidation catalyst on a microwave absorbing substrate; alternatively, the bed is a carbonaceous material. Around the tube is a helix RF waveguide 12 that is fed from microwave connectors 13. The reactant gas 24 enters the bed 11 and is composed of a mixture of oxygen 23, with controller 33 and methane 22 with controller 32. Steam 21 also enters and is similarly controlled 31. Many other light hydrocarbons are also employable as reactants. The leaving product gas is sampled 20 to determine its composition.

EXAMPLE 1

With both methane and oxygen in the desired chemical reactions, efficient amounts of these reactants were investigated using the microwave reactor of FIG. 1. Conventional gas chromatographs were employed for measuring steady-state gaseous concentrations. In Table 1 the methane reactant flow rate was varied, and the peak hydrogen percentage obtained in the product gas was slightly above 71 percent. The microwave catalysis bed was an oxidation/reduction catalyst (Pro VOC-7) mixed with fine silicon carbide particles. The microwave power was 800 watts while the steam flow was constant at 1.20 g/min, the oxygen flow was constant at 1.21 g/min, while the methane flow varied from 1.30 to 0.71 g/min.

EXAMPLE 2

Using the same experimental setup as in Example 1, Table 2 shows the oxygen reactant flow rate variation produced a peak hydrogen percentage obtained in the product gas again above 71 percent. The microwave catalysis bed was a fine bed of silicon carbide wash-coated with platinum-oxidation catalyst. The microwave power was 600 watts while the steam flow was constant at 2.40 g/min, the methane flow was constant at 1.30 g/min, while the oxygen flow varied from near zero to 1.82 g/min.

EXAMPLE 3

Using a similar experimental setup as in Example 1 with an activated carbon bed in place of the silicon carbide microwave-activated oxidation catalyst, methanol and steam flow are:

TABLE 1

Product Gas Composition for Varied Methane Inlet Flow Rate (% On dry basis)

Run	CH_4 Inlett mol/min	O_2 inlet mol/min	CH_4	CO	CO_2	H_2
1	0,0813	0,0378	27,55	17,54	7,94	46,97
2	0,074	0,0378	14,64	18,46	5,77	61,13
3	0,0625	0,0378	9,21	20,49	8,51	61,79
4	0,0535	0,0378	5,56	15,16	8,08	71,20
5	0,0446	0,0378	4,10	18,10	13,02	64,78

TABLE 2

Outlet Gas Composition for Varied Oxygen Inlet Flow Rate (% On dry basis)

Run	CH_4 inlet mol/min	O_2 inlet mol/min	CH_4	CO	CO_2	H_2
1	0,0813	0,0095	63,00	8,65	9,41	18,94
2	0,0813	0,0190	33,94	6,84	10,21	49,00
3	0,0813	0,0284	17,26	6,84	9,22	66,67
4	0,0813	0,0360	11,49	8,97	11,21	68,33
5	0,0813	0,0474	7,50	10,10	12,13	70,46
6	0,0813	0,0569	5,59	10,99	11,46	71,96

adequate to produce largely hydrogen and carbon dioxide exit gas with 600-800 watts of microwave power. Thus, carbon monoxide is largely minimized.

EXAMPLE 4

Using a similar experimental setup as in Example 1 with a silicon carbide microwave-activated reduction catalyst, methanol and steam flow are adequate to produce largely hydrogen and carbon dioxide exit gas with 600-800 watts of microwave power. Again, carbon monoxide is largely minimized.

Note that in Table 1, the CO concentration was relatively constant and exceeded the CO.sub.2 concentration that varied considerably. Conversely in Table 2 the CO concentration varied widely while the CO.sub.2 concentration was relatively constant, but not greatly different from that of the CO. This shows the fine-tuning necessary to produce a satisfactory hydrogen-rich gas for a specific fuel cell because of the many variables in this system. These include but are not limited to inlet concentrations of methane, oxygen and water, the type of oxidation catalyst employed and its form of excitation by microwave absorbing carbonaceous material, such as silicon carbide, and the microwave generator power.

With a fixed amount of methanol as a reactant less fine-tuning is needed since only the flow of source of water is important in minimizing the carbon monoxide exit concentration at any given microwave energy level.
Similar fine-tuning occurs when other alkanes and alkanols are employed.

A process for the microwave production of hydrogen comprising passing a light hydrocarbon mixture through a bed irradiated with microwaves, wherein said bed comprises carbonaceous material to energize microwave catalysis, wherein said mixture further comprises sufficient water vapor for efficient hydrogen production, and wherein said mixture further comprises sufficient oxygen for efficient hydrogen production. The temperature of said gases exiting said bed does not exceed 400.degree. F. The carbonaceous material further comprises being selected from the group consisting of activated carbon, char, soot, pyrolytic carbon, carbon black, activated charcoal, and metal carbides, while the light hydrocarbons further comprise being selected from the group of hydrocarbons consisting of no more than six carbon atoms per molecule. The microwaves consist of radiofrequency energy selected from the frequency range consisting of 500 to 5000 Mhz, and the bed further comprises being selected from the group of beds consisting of fluidized, fixed, semi-fluidized, suspended, and moving. The product produced by this process represents a unique combination of hydrogen, carbon dioxide, carbon monoxide and water potentially for use with fuel cells. To obtain the efficient hydrogen production, fine-tuning of the system is required, and this will vary with the type and number of reactants employed as well as the reaction conditions of microwave power and the type of carbonaceous material.

A process for the microwave production of hydrogen comprising passing a controlled mixture of light hydrocarbons and oxygen through a bed irradiated with microwaves, wherein said bed is composed of an oxidation catalyst energized by a carbonaceous material, and wherein said bed is further exposed to water vapor in an amount substantially required for the steam reforming reaction with said light hydrocarbons. The water vapor is supplied either from steam injected into said bed or obtained from liquid water injected into said bed which then vaporizes at the bed temperature and is sufficient to carry out the steam reforming reaction. The carbonaceous material is preferably a substrate formed by the impregnation of a conventional substrate with metal carbides, often silicon carbide. Alternatively, the bed can be composed of a homogeneous mixture of fine silicon carbide particles and fine catalyst particles. The controlled mixture of light hydrocarbons and oxygen represents a ratio of moles of said oxygen to moles of carbon from said light hydrocarbons not exceeding unity. Since the light hydrocarbons, which normally contain no more than six carbon atoms per molecule, are often just methane, this is an equally mole mixture of oxygen and methane; however, for most best-mode situations this ratio is considerably below unity, since the primary purpose is to react said methane with water, not oxygen. The expected maximum leaving temperature of the gases from the bed is 400.degree. F. The microwaves are radiofrequency energy selected from the frequency range consisting of 500 to 5000 Mhz, but commonly are either 915 or 2450 megahertz. The frequency employed affects the effective bed thickness since said bed penetration by microwaves is frequency dependent and further depends upon the mass of the bed particles. For 2450 Mhz microwaves the penetration thickness--that is, where the intensity of the RF energy has decreased by e.sup. -1 --of common bed particles is approximately one inch. The bed further is commonly selected from the group of beds consisting of fluidized, fixed, semi-fluidized, and suspended. The product produced by this process represents a unique combination of hydrogen, carbon dioxide, carbon monoxide and water potentially for use with fuel cells.

The efficient production of hydrogen requires the proper interaction of all the process elements and will vary considerably depending upon their exact specifications; thus, some fine-tuning of the process is required for efficient operation. For instance, using conventional heat of reactions, Eq. (3) produces enough energy by burning one mole of methane to support 4.32 moles of methane reacting to produce hydrogen in Eq. (1). Consequently the water required depends upon the amounts reacted by Eqs. (1)-(3) since one produces water while the others use water; thus, fine-tuning of the water supply is required.

A process for the microwave production of hydrogen comprising passing light alcohols through a bed irradiated with microwaves, wherein said bed is comprised of carbonaceous material, and wherein said bed is further exposed to water vapor in an amount substantially required for the effective production of hydrogen by microwave catalysis. The water vapor is supplied either from steam injected into said bed or obtained from liquid water injected into said bed which then vaporizes at the bed temperature and is enough to maximize the hydrogen production while keeping the carbon monoxide within acceptable limits. The light alcohols, which contain no more than six carbon atoms per molecule, is often methanol or ethanol as these are the most cost effective. The expected maximum leaving temperature of the gases from the bed is 400.degree. F. The microwaves are radiofrequency energy selected from the frequency range consisting of 500 to 5000 Mhz, but commonly are either 915 or 2450 megahertz. The frequency employed affects the effective bed thickness since said bed penetration by microwaves is frequency dependent and further depends upon the mass of the bed particles. For 2450 Mhz microwaves the penetration thickness--that is, where the intensity of the RF energy has decreased by e.sup. -1 --of common bed particles is approximately one inch. The bed further is commonly selected from the group of beds consisting of fluidized, fixed, semi-fluidized, and suspended. The carbonaceous material further comprises being selected from the group consisting of activated carbon, char, soot, pyrolytic carbon, carbon black, activated charcoal, and metal carbides. However, if conventional reduction catalysts are employed, silicon carbide is the normal carbonaceous material employed. The product produced by this process represents a unique combination of hydrogen, carbon dioxide, carbon monoxide and water potentially for use with fuel cells.

The foregoing description of the specific embodiments will so fully reveal the general nature of the invention that others can, by applying current knowledge, readily modify and/or adapt for various applications such specific embodiments without departing from the generic concept, and therefore such adaptations or modifications are intended to be comprehended within the meaning and range of equivalents of the disclosed embodiments. It is to be understood that the phraseology or terminology herein is for the purpose of description and not of limitation.

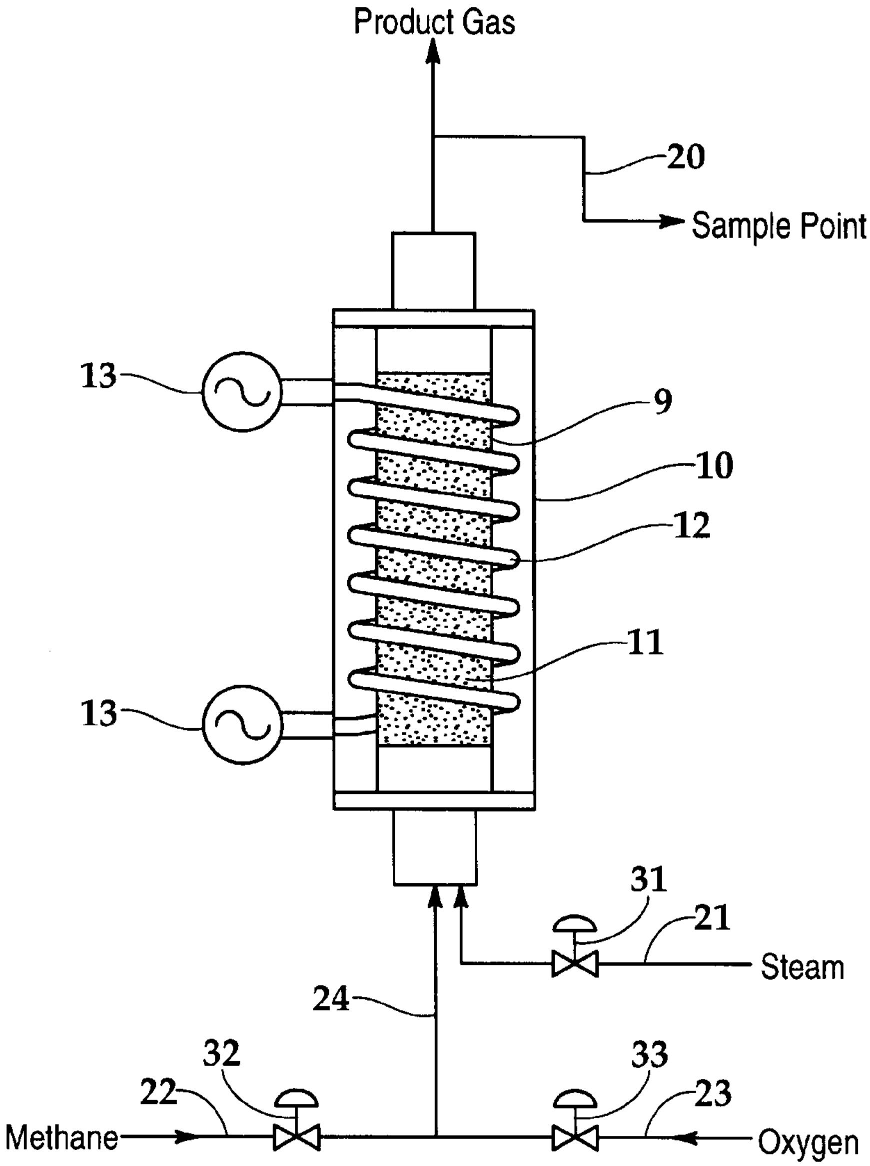
Product Gas
20
Sample Point
13
9
10
12
11
13
31
21
Steam
24
32
33
22
23
Methane
Oxygen

Fig.1

3.5.1.2. Ferguson Steve; Microwave Water Engine

Dieses Schriftstück ist im Internet allgemein bekannt, leider kenne ich niemand dem der Nachbau wirklich gelungen ist. **Hat jemand dazu Infos?**

This engine was first tested 1992 and turned water into steam with the help of a magnetron from a medium microwave oven.

Notice from Mr. Ferguson:

The following information describes a conceptual model for an engine that might run on water exploded with microwave energy.
It is provided SOLELY as entertainment and we are in no way indicating that you should experiment with such a dangerous process. Bill Beaty first posted this as you can check out at the following URL:
http://www.eskimo.com/~bilb/freenrgl/magnet.txt

The purpose of this notice is to place into public domain something which I invented so that it may not be patented and in order to prevent it's use from being restricted in any way.
The device is an engine in which small quantities of water are turned into steam using a magnetron (as found in microwave ovens).

Interested parties may wish to try this test: Place a few drops of water into a clear plastic 35mm film roll holder and put the cap on the film roll holder. Place in a microwave oven and turn the oven on. The 'pop' is the result of the water turning suddenly into steam.

The engine I have invented is far more efficient than any other steam engine because the efficiency of the magnetron in turning water into steam. In fact, the water droplet 'explodes' very much like air/gasoline explodes in a conventional internal combustion engine.

This engine was first tested in 1992. I am however unable to invest the required capital to produce a more sophisticated model and therefore unable to patent it. Even though I may not be able to profit from this technology, it is too good to be kept to myself and I would like to spread it around so that others may be able to use it.

The following is an outline of how to construct the device and a few cautions:

PARTS NEEDED:
. Magnetron from medium power microwave oven.
2. Small 4-stroke single cylinder lawn mover engine or similar engine with 'old style' points and ignition system.
3. Automotive alternator with built-in rectifier and regulator, also a 12-volt auto battery.
4. "Trigger" mechanism from an aircraft "strobe" landing light.

INSTRUCTIONS:
1. The magnetron fits into the park plug hole.
2. The distributor points are modified so that the contact is closed when the piston is at the top dead center and this contact is used to activate the aircraft strobe mechanism.

3. The high voltage from the strobe is connected to directly fire the magnetron which in turn produces steam which moves the piston.
4. The engine turns the alternator which keeps the battery charged, which supplies the electrical power for the magnetron.

CAUTION AND TIPS: WARNING!!! DANGER!!!!
1. Be careful around the magnetron. KEEP IT SHIELDED WITH METAL. IT CAN CAUSE SEVERE BURNS THAT MAY NOT BE READILY VISIBLE WHEN THEY FIRST OCCUR.

2. The 'strobe' trigger delivers a very high voltage which can jump to ground. WEAR RUBBER SOLED SHOES AND INSULATE WELL.

3. Be sure to modify the distributor points so they close at the top dead center. Timing advance depends on the power of the magnetron used and the amount of water. Try different carb jet sizes -- drill out if needed.

4. Due to variables, don't expect high engine speeds without a little experimentation due to variables.

5. Start with a fully charged battery or your alternator won't work.

6. The energy produced is in excess of the power required to run the alternator but until you get the RPM up, and the parts working in harmony, it may be best to use a battery charger instead of an alternator.

7. An easy way to measure net power output after you have the alternator online is to run a few 12 Volt lights from the battery. You will see that the battery stays charged even with the lights on and the motor keeps on going.

8. Although I have not tried it, the idea of vaporizing water with microwaves should also work well in a converted turbine.

3.5.1.3. Klaar Alfred;

1.) Technisches Gebiet auf das sich die Erfindung bezieht:

Die Erfindung betrifft ein Verfahren zur Erzeugung von mechanischer Arbeit mit einem Verbrennungsmotor, der mit Selbst- oder Fremdzündung arbeitet, wobei als Treibstoff Knallgas verwendet wird, welches in diesem Verbrennungsmotor selbst hergestellt wird. Es ist ein Verfahren zur Erzeugung von Knallgas aus ganz normalen Wasser [H2O] (nur bei Minusgraden ist der Zusatz entsprechender Antigefriermittel vorgesehen) in einem Verbrennungsmotor (sowohl Ein- wie auch Mehrzylindermotor) mit anschließender Detonation des soeben im Motor selbst erzeugten Knallgases und damit Erzeugung mechanischer Arbeit mit diesem Verbrennungsmotor, wobei Luft durch einen Kolben in einen Zylinder gesaugt bzw. durch entsprechende Maßnahmen in den Zylinder gedrückt (geladen) und verdichtet wird, dadurch gekennzeichnet, daß danach Wasser von einer entsprechenden Vorrichtung in den Verbrennungsraum des Zylinders unter Hochdruck eingespritzt wird, aus dem durch die Verdichtungswärme und durch mittels Mikrowellen erzeugender Vorrichtung, wobei die Mikrowellenstrahlung in den Verbrennungsraum des Zylinders gerichtet ist bzw. in den Verbrennungsraum geleitet wird, somit durch einen dadurch im Zusammenhang mit Katalysatoren ausgelösten kombinierten und beschleunigten „Thermomagnetischen - Thermolyse Spaltungs- Vorgangs“, womit Wasserstoff und Sauerstoff (Knallgas) unmittelbar vor dem Arbeitstakt (Verbrennung, Verpuffung, Explosion, Deflagration, Detonation) hergestellt bzw. freigesetzt wird, wobei das Knallgas durch einen Glühstift und/oder Zündkerze und dann durch Selbstzündung mit der Ansaugluft detoniert und so den Kolben als Arbeitsleistung an den unteren Totpunkt verschiebt.

2.) Bisheriger Stand der Technik

Da es sich bei den heute verwendeten fossilen Brennstoffen um nicht erneuerbare Energiequellen handelt, wird weltweit nach Alternativen geforscht.

Die Verbrennung fossiler Brennstoffe stellt infolge der anfallenden und bis dato nur teilweise beherrschbaren Emissionen (Co2, CO, SO2 sowie Ruß) und Erschöpfung der Vorkommen ein erhebliches globales Problem dar.

Nach heutigem Erkenntnisstand wird pro Futura eine weitgehende Umstellung der Energieversorgung der Industrienationen auf nicht fossile Primärenergie unausweichlich.

Umfangreiche Vorkommen für Wasserstoff stehen in Form von Wasser weltweit zur Verfügung. Nach dem aktuellen Stand der Technik ist heute Wasserstoff, als „reine Energiequelle“ unbestritten.

Durch die im Prinzip nahezu unbegrenzte Verfügbarkeit des Wasserstoffes, denn er liegt mit 0,88 Massen % an 9. Stelle in der Häufigkeit der in der Erdrinde vorkommenden Elemente, bietet er sich in diesem Zusammenhang als zukünftiger Primärenergieträger an, zumal mit dem erfindungsgemäßen Thermomagnetischen - Thermolyse Kombinations- Spaltungs- Motor auch die Sekundärenergie Elektrizität erzeugt werden kann.

Bei Verbrauch des Wasserstoffes wird durch die Rekombination mittels des im Wasser selbst und des in der Luft enthalten Sauerstoffes ein relativ einfacher und immer wiederholbarer Kreislauf in Gang gesetzt.

Die üblichen Energiequellen unserer Zeit sind:	**Anwendung:**
Die Kohle	Wärmekraftwerke, Stromerzeugung, allgemeines Heizmaterial,
Die radioaktiven Materialien	Sie werden im erregten Zustand als Energievermittler angewendet
Die Luft	Ihre kinetische Energie (Wind) wird ausgenutzt und umgewandelt in Elektrizität bzw. mechanische Arbeit
Das Erdgas	Nach Förderung wird es als Explosions- und Heizmaterial verwendet.

Das Erdöl	Nach Förderung und Raffinierung werden vor allem Benzin und Dieselöl und all seine Nebenprodukte als nutzbare Energieträger verwendet.
Das Wasser	Ausnutzung seiner kinetischen Energie, Raumänderungsenergie (Veränderung des Aggregatzustandes),
Sonnenenergie	Wärme, Photosynthese etc.

Wasserstoff (Knallgas)motor:

Die anfänglichen technischen Probleme der zum Teil in (Groß-) Versuchen noch immer laufenden Wasserstoffmotoren sind bereits gelöst.

Es wird Wasserstoff, zum Teil in verschiedenen Aggregatzuständen, für die Knallgaserzeugung, genauso wie heute üblicherweise Benzin oder Dieselöl im KFZ als Verbrauchsmaterial, oftmals in speziell konstruierten und damit finanziell aufwendigen Wasserstofftanks (Metallhybridspeicher), mitgeführt.

3.) Kritik des heutigen Standes der Technik

Die üblichen Energiequellen unserer Zeit sind:	**Kritik:**
Die Kohle	Ihre Verwendung ist umweltverschmutzend und erzeugt giftige Verbrennungsprodukte (CO, CO2, CO3). Der Wirkungsgrad ist max. 20%ig und die Gewinnung, Lieferung und Anwendung ist kostspielig.
Die radioaktiven Materialien	Die Strahlung ist gefährlich. Bis heute weltweit ungelöste Endlagerung des strahlenden Materials.
Die Luft	Die Ausnutzung der Intensität der Windströmungen ist stark vom Wetter abhängig, somit ist keine kontinuierliche Energiegewinnung gegeben.
Das Erdgas	Die Gewinnung und Hinleitung zu nutz baren Folgeprodukten ist

	kostenintensiv. ständige Feuer- u. Explosionsgefahr. Die Verbrennungsprodukte sind giftig und zählen neben dem Erdöl zu den größten Umweltverschmutzern. Ist insbesondere für das immer größer werdende Smog- und Ozonlochproblem verantwortlich.
Das Erdöl	Im Prinzip wie Erdgas, siehe oben; Auf die Gefahr der immer wieder stattfindenden Tankerkatastrophen und die damit einhergehende Verschmutzung des Lebensraumes Meer wird verwiesen.
Das Wasser	Die Ausnutzung seiner kinetischen Energie ist durch den Bau von Dämme und Staubecken kostenintensiv und setzt eine nicht unerhebliche Zerstörung der natürlichen Landschaft voraus.
Sonnenenergie	Die Solarpaneele sind kostspielig herzustellen, der Wirkungsgrad ist (noch) nicht sehr hoch und sie verunstalten die Landschaft.

Wasserstoff (Knallgas)motor:

Das Problem der zum Teil in (Groß-) Versuchen laufenden Wasserstoff(Knallgas)Motoren liegt keineswegs bei den Motoren selbst, sondern liegt darin, daß davon ausgegangen wurde, daß mehr oder weniger reiner Wasserstoff, zum Teil in verschiedenen Aggregatzuständen, für die Knallgaserzeugung, genauso wie heute üblicherweise Benzin oder Dieselöl im KFZ als Verbrauchsmaterial, in speziell konstruierten und damit finanziell aufwendigen Wasserstofftanks (Metallhybridspeicher etc.), mitgeführt wird.

Infolge der hochexplosiven Eigenschaften des Wasserstoffes hat sich dessen Erzeugung, (üblicherweise mittels Elektrolyse), die Lagerung, Distribution und Verwendung durch die nicht besonders geschulte Allgemeinheit im Hinblick auf sicherheitsrelevante Maßstäbe sowohl als im höchsten Maße bedenklich als auch als äußerst kostenintensiv herausgestellt.

Aus den vorher beschrieben Gründen haben und hatten alle heute existierenden „Wasserstoff (Knallgas)Motore“ keine reelle Chance einer tatsächlichen aus den Experimentierstadium hinausgehenden wirtschaftlichen Nutzung.

4.) Die technische Aufgabe welche mit der Erfindung gelöst werden soll

Die Aufgabe besteht darin, eine ökonomische Lösung des Energieproblems zu finden, die vorhandene Natur zu schützen, ohne zusätzliche, die Menschheit gefährdende Gift- und/oder Strahlungsstoffe zu erzeugen.

5.) Die Erfindung wie sie in den Patentansprüchen gekennzeichnet ist

A.) Chemische, physikalische, (Verbrennung)technische Grundlagen betreffend Wasser, Wasserstoff und Knallgas

Wasser kommt in der Natur in allen drei Aggregatzuständen somit fest, flüssig und dampfförmig, vor.

Das Wasserstoffatom ist das einfachste und leichteste. Um ein Proton als Atomkern kreist ein Elektron.

Der Wasserstoff ist ein farb- und geruchloses Gas mit einer Dichte von 0,0899 Gramm je Liter.

Die chemische Formel der Knallgas Reaktion ist: $H_2 + ½ O_2 = H_2O$

Die Zünd- und Detonationseigenschaften der Gasgemische (Knallgas) von Wasserstoff mit Sauerstoff (Luft) sind aus Sicherheitsgründen von großer Bedeutung wobei die *Zündgrenzen* von Wasserstoff in Luft bei 4,-- bis 74,2 Vol. % H_2 liegen.

Wasserstoff hat unter allen Gasen den höchsten Diffusionskoefizienten, die untere und obere *Detonationsgrenze* von Wasserstoff in Luft liegt bei 18 und 59 Vol. %, die *Zündtemperatur* beträgt 858 Grad Celsius, die *Verbrennungsgeschwindigkeit in Luft* 275 cm/s und ist im Vergleich zu Benzin mit 37 – 43cm/s wesentlich höher. Ebenfalls ist die *Detonationsgeschwindigkeit* in Luft mit 1,9 Km/s im Vergleich zu Benzin mit nur 1,4 bis 1,7 km/s, höher.

Infolge der jeweils höheren Verbrennungsgeschwindigkeit und der höheren Detonationsgeschwindigkeit ist Knallgas technisch gesehen als Betriebsstoff dem heute überwiegend verwendeten Benzin oder Dieselöl vorzuziehen.

Im Vergleich zu anderen Brennstoffen hat Knallgas einen besonders weiten Zündbereich, eine hohe Verbrennungs- und Flammgeschwindigkeit und benötigt eine geringe Zündenergie.

Die Reaktionen des Wasserstoffatoms spielen bei der thermischen Spaltung sowie bei der Radikal Kettenreaktion des Sauerstoffs eine wesentliche Rolle.

Mit Sauerstoff aus Wasser oder Luft reagiert Wasserstoff zu Wasser. Die Reaktion kann sowohl thermisch als auch katalytisch als auch in jeglicher thermischer und katalytischer Kombination eingeleitet werden.

B.) Einfluß von Mikrowellen auf den Thermolyse Prozeß

Mikrowellen sind Wellen des elektromagnetischen Spektrums zwischen dem Gebiet der ultrakurzen Radiowellen und dem infraroten Bereich des optischen Spektrums.

Empirische Versuche haben gezeigt, daß die gleichzeitige Einbringung von Mikrowellen mit einer Stärke von 900 Watt oder höher in einen Thermolyse Prozeß zwecks Spaltung des Wassers in Wasserstoff und Sauerstoff (Knallgaserzeugung), diesen Thermolyse Prozeß mit wesentlich niedrigeren Temperaturen ablaufen läßt als wenn in diesen Thermolyse Prozeß keine Mikrowelleneinstrahlung eingebracht wird.

C.) Beschreibung des Umbaus eines handelsüblichen serienmäßigen Vierventiltechnik Dieselmotors zur Verwendung als Thermomagnetischen - Thermolyse Kombinations-Spaltungs- Motor;

Der erfindungsgemäße „Wasserstoff (Knallgas)motor“ neuer Technologie wird durch den Umbau - wie nachstehend beschrieben - von vielfach in Großserie produzierten Dieselmotoren die mit Aufladung und einer Direkteinspritzung bis zu 2000 bar entweder mittels Radialkolben – Verteiler- Einspritzpumpe oder mit einem Common - Rail System oder einem System der Pumpe-/Düse-Einheit ausgerüstet sind, verwirklicht.

Der Zylinderkopf eines Vier -Ventiltechnik Dieselmotors mit Direkteinspritzung wird dermaßen umgebaut, daß eines der zwei Einlaßventile ausgebaut und anstatt dessen in der nunmehr verbliebenen Bohrung (Öffnung-) des Ansaugkanals eine Mikrowellenenergie Einstrahlungsvorrichtung eingebaut wird, wobei infolge vorhersehbaren Platzmangels ein, mehrere oder alle Einzelteile der Mikrowellen Einstrahlungsvorrichtung wie Magnetron, Koppelstift, Hohlleiter, Einkopplung und Wellen Rührer zur Gänze oder zum Teil außerhalb des Ansaugkanals anzubringen sind und nur die Zufuhr der Mikrowellen Energie durch den Ansaugkanal mittels Koaxialleiter und Resonanzkörper erfolgt und weiters auch eines der zwei Auspuffventile ausgebaut wird und anstatt dessen in die nunmehr verbliebenen Bohrung (Öffnung-) des Auspuffkanals eine Zündkerze und Temperaturfühler eingepaßt wird.

Die in den ehemaligen 2. Ansaugkanal einzupassende Mikrowellen Einstrahlvorrichtung und die in den ehemaligen 2. Auspuffkanal einzupassende Zündkerze inkl. Temperaturfühler sind jeweils druckdicht auszuführen.

Eine Platinbedampfung des Verbrennungsraumes inkl. der in Funktion verbliebenen Ein- und Auslaßventile, damit diese als Katalysator des „Thermomagnetischen - Thermolyse Spaltungsvorgangs“ fungieren, ist vorzunehmen.

Die in den Zylinder angesaugte bzw. hineingepreßte Luft wird mittels eines Koaxialverdichters, Turboladers, oder sonstiger geeigneter und technisch bekannter Maßnahmen in einen möglichst hohen, technisch gerade noch machbaren Maß verdichtet und unter Verwendung des vom Serienmotor vorhanden Glühstiftes wird diese knapp vor Erreichung des Einspritzzeitpunktes (vor oberen Totpunkt des Kolbens) kurzfristig auf 1100 ^{o} Celsius und höher (je nach Ladedruck) erhitzt.

Unmittelbar vor Erreichen des oberen Totpunktes – zum Einspritzzeitpunkt - wird mit einem Druck von 2.000 bar und wenn technisch möglich auch höher, mittels handelsüblicher:

Hochdruck-Radialkolben – Verteiler- Einspritzpumpe oder mit einem Common-Rail System oder einen System der Pumpe-/Düse-Einheit die gleiche Menge Wasser (wie vor dem Umbau des Motors Dieselöl) in den Verbrennungsraum eingespritzt.

Bedingt durch die hohe Temperatur und den hohen Einspritzdruck geht die eingespritzte Menge Wasser sofort in den für die „Thermomagnetischen Thermolyse Spaltungs- Vorgang“ wünschenswerten mikromolekularen dampfförmig ähnlichen Zustand über und die gleichzeitig erfolgte hohe Mikrowellen Einstrahlung läßt unmittelbar im Verbrennungsraum detonationsfähiges Knallgas entstehen.

D.) Beschreibung des „Thermomagnetischen - Thermolyse Spaltungs- Vorganges“ in Verbindung mit dem unter 3.) beschriebenen umgebauten Wasserstoff(Knallgas)motor neuer Technologie, mit dem Wasser (H2O) in Wasserstoff (H2) und Sauerstoff (O) zerlegt und die Verwendung dieses soeben gewonnen Wasserstoffes und Sauerstoffes unter Hinzutritt von Luft als Knallgasgemisch zur sofortigen Detonation (Arbeitstakt) im Zylinder einer Verbrennungskraftmaschine zur Anwendung kommt.

Thermolyse bedeutet generell die Spaltung chemischer Verbindungen durch Hitze – mikroskopisch gesehen die Auftrennung von Molekülen in Atome der sie bildenden chemischen Elemente.

Das industriell ungelöste Problem einer rein thermischen Wasserspaltung war und ist die Abtrennung des Wasserstoffes und Sauerstoffes unter Prozeßbedingungen und damit insbesondere die Vermeidung der Rekombination. Im vorliegende Verfahren ist diese Rekombination, als Knallgas, zur sofortigen Explosion jedoch ausgesprochen erwünscht.

Generell kann eine rein thermomagnetische Wasserspaltung unter Ausnutzung des Paramagnetismus von O_2 (H_2 und H2O sind diamagnetisch) bei wesentlich niedrigeren Temperaturen ablaufen als die rein thermische Spaltung. Jedoch ist zu deren Durchführung eine magnetische Feldstärke von $>10^4$ Tesla erforderlich, die derzeit noch nicht herstellbar ist.

Das Wasserstoffmolekül ist stabil. Normalerweise beginnen sich die einzelnen Moleküle erst im Dampf und um die 2000 Grad Celsius in Wasserstoff und Sauerstoff aufzutrennen und erst über 3.500 Grad Celsius haben sich alle Moleküle gespalten, die Wärmeschwingungen der Atome im Molekül sind so stark geworden, daß sie die molekularen Anziehungskräfte übersteigen.

Bei 3.500 Grad sind etwa 70% des Wassers in OH-Radikale, Wasserstoff und Sauerstoff dissoziiert und nur durch hohe Prozeßtemperaturen werden hohe Wirkungsgrade erzielt.

Da derartig hohe Temperaturen aus Materialgründen im Verbrennungsraum eines Motors (noch?) nicht technisch beherrschbar sind, mußte ein Verfahren zur Absenkung des thermolytische Temperaturbereiches gefunden werden.

In der sinnvollen Verbindung bzw. Kombination der Verfahren „thermomagnetische“ und „thermischer“ Wasserspaltung konnten die für jedes Verfahren einzeln betrachtet ungünstigen Bedingungen zu in der Kombination gesehen äußerst günstigen vereinigt werden, zumal bei diesem Verfahren eine wesentlich geringere und somit auch machbare magnetische Feldstärke (Mikrowellen Einstrahlung von 900 Watt) erforderlich ist.

Zusammenfassend darzustellen ist, in den (die) Zylinder einer Verbrennungskraftmaschine wird die Strahlungsleistung eines 900 Watt Magnetrons dermaßen in den Verbrennungsraum eingebracht, daß die Mikrowellen mittels eines Koaxialleiters bzw. Wellen Rührers durch den umgebauten und im Zylinderkopf vorgesehenen zweiten Einlaßkanal in den Verbrennungsraum eingebracht werden.

Aufgrund der metallenen mit Platin als Katalysator bedampften Oberfläche des Brennraumes werden die Mikrowellen reflektiert – die Wirkung erhöht sich.

Bringt man nun eine genau dosierte Menge Wasser (in Form einer bereits beschriebenen Hochdruck Einspritzung) als dielektrischen Stoff in dieses elektrische Feld, so werden Kräfte auf die Wassermoleküle ausgeübt, die Polarisationsvorgänge zur Folge haben. Dabei bilden sich molekulare Dipole, und diese orientieren sich nach der Richtung des äußeren elektrischen Feldes.

Die Mikrowellenstrahlung dringt tief in die zu erwärmende Wassereinspritzung ein, es entstehen starke Schwingungen, und zwar pro Sekunde ca. 2,5 Milliarden Mal. Wobei im Inneren elektromagnetische Energie zusätzlich in Wärme umgewandelt wird. Hierfür sind mehrerer Effekte, wie Dipoldrehung, Dehnung langer Moleküle, Ionenleitung und Grenzflächenpolarisation verantwortlich.

In einem elektrischen Wechselfeld wie bei Mikrowellen werden auf die Dipole ständig wechselnde Kräfte ausgeübt und damit sind die Wärmeschwingungen der Atome im Molekül so stark geworden, daß sie die molekularen Anziehungskräfte übersteigen.

Auf diese Weise wird im Inneren des Wassermoleküls jene Volumens Erwärmung, die zur Spaltung nötig ist, erzeugt.

Dies führt zu Bewegungen entgegen den Bindungskräften des Wasser und damit zur wesentlich schnelleren Auslösung des „Thermomagnetischen - Thermolyse Spaltungs- Vorgangs“ und damit wird der Thermolyse Prozeß unter im Zylinderkopf bzw. Verbrennungsraum beherrschbaren Temperaturen möglich.

Die Reaktion des Wasserstoffatoms spielt, wie schon erwähnt, bei der thermischen Spaltung sowie bei der Radikal Kettenreaktion des Sauerstoffs eine wesentliche Rolle.

Es entsteht detonationsfähiges Knallgas, Wasser entspricht einem Wasserstoff Luftgemisch von 29, somit detonationsfähigen, Volums Prozenten.
Durch die Reflektierung der Mikrowellen an der metallenen Oberfläche des Verbrennungsraumes kommt es zur Funkenbildung und damit zur Selbstzündung des soeben entstandenen Knallgasgemisches.

Wenn eine Druckwelle von einer Flamme ausgeht und von einer Zylinderwand zurückgeworfen wird, erhöht sich der Druck im Flammenbereich. Dann kann die Flammgeschwindigkeit, die bei normaler Verbrennung 275 cm/s beträgt, plötzlich auf bis zu 2000 m je Sekunde anwachsen.

Das äußert sich als Verdichtungsstoß, der zur Arbeitsleistung – der Kolben wird an den unteren Totpunkt bewegt – herangezogen wird.

E.) Knallgas – Wasserstoffverbrennung - Arbeitsleistung

Zur Optimierung der Verbrennung sollte Sauerstoff in einem über die stöchiometrischen Verhältnisse hinausgehenden Anteil vorhanden sein. Dieser Sauerstoffüberschuß wird durch Luftsauerstoff bereit gestellt und sollte zwischen 1,14 als oberen Grenzwert und 9,85 als unteren Grenzwert liegen.

Wasserstoff-Luft-Gemische (Knallgas) detonieren viel eher als andere Gase - eine Folge der viel höheren Geschwindigkeit, mit der sich Wasserstoff Flammen ausbreiten. Man spricht nicht von einer Explosion, sondern vom Umschlagen einer Deflagration, eines raschen Abbrennens in eine Detonation was aber im Grunde dasselbe bedeutet. Versuche haben gezeigt, ein solches "Umschlagen" wird durch Turbulenzen ausgelöst und diese wieder durch die Mikrowelleneinstrahlung begünstigt.

Beträgt der Wasserstoffanteil 29 Vol. %, entfällt auf jeweils zwei Wasserstoffatome genau ein Sauerstoff Atom, die sich zu einem Wassermolekül verbinden - bei einem solchen <stöchiometrischen> Verhältnis verbrennt der Wasserstoff restlos. Die Flamme ist dabei kurzfristig 2.318 Grad Celsius heiß. Bei allen anderen Mischungsverhältnissen sind die Flammentemperaturen erheblich niedriger, weil dann die enthaltene Wasserstoffmenge kleiner ist und die Menge jener Luft und damit der Luftsauerstoffanteil, der ja im Verbrennungsraum verdichtet wird, ist variabel.

Wenn die Zündtemperatur der Flammen von 535 Grad Celsius überschritten wird, kommt es bereits zu einer Verpuffung oder Detonation.

Wie bei jeder Verbrennung mit Luft bilden sich auch bei der Flammenverbrennung von Wasserstoff Stickoxyde. Sie werden bei der flammenlosen <kalten> Verbrennung vermieden.

Im Unterschied zu anderen Gasen kann man jedoch die Verbrennung in Richtung zu hohen Luftüberschuß steuern, und damit die Temperatur senken, damit wird der Vorgang werkstoffmäßig beherrschbar und die Stickoxydbildung gemindert.

In Brennräumen wo sich Wasserstoff und Sauerstoff dank eines Katalysators schon bei Temperaturen von weit unter 1000 Grad Celsius verbinden, entstehen auch mit Luft keine Stickoxyde mehr.

Ergänzend zur vorhergehenden Beschreibung muß gesagt werden, daß die Spaltung von Wasser mit positiver Reaktionsenthalpie (konstanter Druck in der vorhandenen Wärme) abläuft und es kann mit Hilfe der Kombination von Wärme – (Verdichtungswärme erhöht durch den Aufladungsdruck) und elektrischer Energie – (Mikrowelleneinstrahlung, Glühstift, Zündkerze) durchgeführt werden.

Durch das relativ hohe Verdichtungsverhältnis des unter 3.) dargestellten „Thermomagnetischen – Thermolyse Spaltungs- Motors“ und die damit zusammenhängende Erhitzung der aufgeladen komprimierten Ansaugluft und im Zusammenwirken der konstanten Glühtemperatur des Glühstiftes mit der Mikrowellen Einstrahlung wird kurzfristig eine Arbeitstemperatur von mehr als 1000 o Celsius im Brennraum erreicht, die ausreicht, daß sich die unter Hochdruck eingespritzten Wassermoleküle durch den „Thermomagnetischen Thermolyse Kombinations-Spaltungs- Vorgangs“ in Wasserstoff und Sauerstoff spalten und damit detonationsfähiges und somit arbeitsfähiges Knallgas, direkt im Verbrennungsrum – dort wo es zur Arbeitsleistung benötigt wird – entsteht.

Es wird somit die jeweils nötige Knallgasmenge zum Betrieb der Verbrennungskraftmaschinen, abhängig von der in den Verbrennungsraum eingespritzten Wassermenge im Motor selbst hergestellt, und die so drehzahlabhängige Knallgasmenge wird durch einen Glühstift und/oder Zündkerze und dann durch Selbstzündung mit der Luft detonieren und den Kolben als Arbeitstakt an den unteren Totpunkt verschieben.

F.) Schlußbetrachtung

Durch das erfindungsgemäße „ Thermomagnetische – Thermolyse Spaltungs- Verfahren“, durchgeführt in einem erfindungsgemäßen Wasserstoff - Knallgas Erzeugungs- und Verbrauchs Motors neuer Technologie, können die für die Herstellung der eigentlichen Brennstoffbestandteile erforderlichen nicht entzündlichen Ausgangsstoffe (Wasser und Luft) in vollkommen ungefährlicher Form sicher im Fahrzeug transportiert werden.

Die notwendige Menge Knallgas wird direkt im Verbrennungsraum erzeugt und dort anschließend außerhalb eines besonderen Regelbedarfs, somit völlig ungefährlich, sofort verbraucht.

Das vorstehend beschriebene Verfahren hat auch noch den äußerst angenehmen Nebeneffekt, daß praktisch reiner Wasserdampf den Auspuff der Verbrennungskraftmaschine verläßt, wobei dieser kondensiert und wenn gewünscht kann das Kondensat in den Tank rückgeleitet werden wodurch nur ein relativ geringer Nachfüllbedarf an Wasser entstehen wird.

Im Wasser ist die positive Energie des hoch explosiver Wasserstoffs enthalten, die durch Knallgas-Verbrennung (Explosion) mittels des im Wasser selbst enthalten Sauerstoffs bzw. dem Sauerstoffanteils der Luft, genutzt wird.

Die Zufuhr der externen elektrischen Energie in Form von Mikrowellen ist geringer als die im Knallgas befindlichen Explosionsenergie.

Infolge Geldmangel konnte ich diesen Motor(um)bau bis dato nicht durchführen.

3.5.1.4. Mallove Eugene

76570.2270@compuserve.com Sat Oct 28 17:38:42 1995; Date: 28 Oct 95 15:57:18

The device is an engine in which small quantities of water are turned into steam using a magnetron (as found in microwave ovens).

Interested parties may wish to try this test:

Place a few drops of water into a clear plastic 35mm film roll holder and put the cap on the film roll holder.

Pace in a microwave oven and turn the oven on. The 'pop' is the result of the water turning suddenly into steam.

The engine I have invented is far more efficient than any other steam engine because the efficiency of the magnetron in turning water into steam.

In fact, the water droplet 'explodes' very much like air/gasoline explodes in a conventional internal combustion engine. This engine was first tested in 1992. I am however unable to invest the required capital to produce a more sophisticated model and therefore unable to patent it.

Even though I may not be able to profit from this technology, it is too good to be kept to myself and I would like to spread it around so that others may be able to use it.

The following is an outline of how to construct the device and a few cautions:

PARTS NEEDED:
Magnetron from medium power microwave oven.
Small 4-stroke single cylinder lawn mover engine or similar engine with 'old style' points and ignition system.
Automotive alternator with built-in rectifier and regulator, also a 12-volt auto battery.
"Trigger" mechanism from an aircraft "strobe" landing light.

INSTRUCTIONS:
The magnetron fits into the spark plug hole. The distributor points are modified so that the contact is closed when the piston is at the top dead center and this contact is used to activate the aircraft strobe mechanism.
The high voltage from the strobe is connected to directly fire the magnetron which in turn produces steam which moves the piston.

The engine turns the alternator which keeps the battery charged, which supplies the electrical power for the magnetron.

CAUTION AND TIPS: WARNING it is DANGER!
Be careful around the magnetron. KEEP IT SHIELDED WITH METAL.
It can CAUSE SEVERE BURNS THAT MAY NOT BE READILY VISIBLE WHEN THEY FIRST OCCUR.

The 'strobe' trigger delivers a very high voltage which can jump to ground. WEAR RUBBER SOLED SHOES AND INSULATE WELL.

Be sure to modify the distributor points so they close at the top dead center. Timing advance depends on the power of the magnetron used and the amount of water. Try different carb jet sizes -- drill out if needed.

Due to variables, don't expect high engine speeds without a little experimentation due to variables.

Start with a fully charged battery or your alternator won't work.

The energy produced is in excess of the power required to run the alternator but until you get the RPM up, and the parts working in harmony, it may be best to use a battery charger instead of an alternator.

An easy way to measure net power output after you have the alternator online is to run a few 12 volt lights from the battery. You will see that the battery stays charged even with the lights on and the motor keeps on going.

Although I have not tried it, the idea of vaporizing water with microwaves should also work well in a converted turbine.

3.5.1.5. Sakamoto; Yuichi

USP #: 6,717,368; April 6, 2004(Tokyo-to, JP), Senda; Kazuaki (Niiza, JP)

Plasma generator using microwave

Here is disclosed a plasma generator using microwave wherein a plasma generating chamber is provided with a plurality of wave guide tubes extending in parallel one to another at regular intervals, each of the wave guide tubes being formed with a plurality of coupling ports arranged intermittently in an axial direction of the wave guide tube and dimensioned so that coupling coefficient thereof become gradually higher toward a distal end of the wave guide tube, and a plurality of dielectric windows provided through the plasma generating chamber in association with the respective coupling ports so that microwave electric power radiated through the coupling ports into the plasma generating chamber may be uniformized and thereby plasma of a large area may be generated with high and uniform density.

BACKGROUND OF THE INVENTION

The present invention relates to a plasma generator using microwave and more particularly to such plasma generator used, for example, to wash or etch surface of a workpiece such as metallic piece, semiconductor or insulator or to coat the surface of such workpiece with thin film.

BACKGROUND ART

The plasma generator of RF (radio frequency power source) parallel-plate type as shown in FIG. 6 of the accompanying drawings has been most extensively used to generate processing plasma free from magnetic field.

This plasma generator 10 of well-known art comprises a plasma generating chamber 11 containing therein a pair of conductive parallel plates 12a, 12b adapted to be power-supplied from a high-frequency power source 13 so that plasma 14 may be generated between the parallel plates 12a, 12b. Referring to FIG. 6, reference numeral 15 designates a vacuum pump and reference numeral 16 designates a gas charging line. The plasma generator 20 of RF induction type as shown in FIG. 7 has been also extensively used.

This plasma generator 20 of well-known art comprises a plasma generating chamber 21 provided there around with a high frequency coil 22 adapted to be power-supplied from a high-frequency power source 23 so that plasma 24 may be generated within the plasma generating chamber 21.Referring to FIG. 7, reference numeral 25 designates an auxiliary field coil, reference numeral 26 designates a vacuum pump and reference numeral 27 designates a gas charging line. An example of the conventional plasma generators using microwave is the plasma generator of surface wave excitation type as shown in FIG. 8. This plasma generator 30 of well-known art comprises wave guide tubes 31, a plasma generating chamber 32 and a dielectric plates 33 interposed between the wave guide tubes 31 and the plasma generating chamber 32 so as to define dielectric windows. With such construction, the surface wave is generated on the surfaces of the dielectric plates 33 facing the plasma generating chamber 32 as power Po in the form of microwave is supplied from the wave guide tubes 31 and this surface wave ionizes gaseous molecules and thereby generates plasma 34. Referring to FIG. 8, reference numeral 35 designates a vacuum pump and reference numeral 36 designates a gas charging line. The plasma generator 10 of FIG. 6 is disadvantageous in that the plasma 14 has a diameter of 0.2 m or less, an electron density of 1.times.10.sup.11 cm. sup.-3 or less and a plasma density homogeneity of .+-.5% or less. As a result, both the plasma area and the electron density are too low to be used for surface processing of semiconductors and/or spray-coating with a thin film. The plasma generator 20 of FIG. 7 is more advantageous than the plasma generator 10 so far as the electron density is concerned. However, it is impossible to obtain the plasma of homogeneous high electron density unless complicated adjustment is carried out by application of DC or high frequency auxiliary magnetic field by the auxiliary field coil 25. The plasma generator 30 of FIG. 8 is necessarily accompanied with increased cost because a thickness of the dielectric plates 33 should be sufficiently increased to protect the plasma generating chamber 32 from ambient pressure if it is desired to enlarge the plasma area. Furthermore, it is difficult for this plasma generator 30 to ensure the desired homogeneity of the plasma density. In view of the situation as has been described above, it is a principal object of the present invention to provide a plasma generator constructed so that the microwave energy may be used to improve the homogeneity of plasma density as well as the electron density and to ensure plasma having a large area.

SUMMARY OF THE INVENTION

The object set forth above is achieved, according to the present invention, by a plasma generator adapted to supply microwave energy into a plasma generating chamber to generate plasma within the plasma generating chamber, said plasma generator comprising a plurality of wave guide tubes arranged in parallel one to another to supply microwave energy, each of the wave guide tubes being formed with a plurality of coupling ports arranged intermittently in an axial direction of the wave guide tube and dimensioned so that coupling coefficient thereof become gradually higher toward a distal end of the wave guide tube, and a plurality of dielectric windows provided through the plasma generating chamber in association with the respective coupling ports of the wave guide tubes. According to the present invention, the coupling ports are dimensioned so that these ports may have coupling coefficients gradually increasing toward the distal ends of the respective wave guide tubes and thereby microwave energy radiated through the respective coupling ports of the respective wave guide tubes may be uniformized. Accordingly, by appropriately selecting the intervals of the plural wave guide tubes as well as the intervals of the coupling ports, plasma of high and uniform density can be generated by the microwave energy radiated through the coupling ports and the associated dielectric windows into the plasma generating chamber. Area of the plasma generated in the manner as has been described above can be enlarged by providing the respective wave guide tubes with a plurality of the coupling ports.

The dielectric windows can be separated one from another in association with the respective coupling ports and therefore the size of the windows can be limited. This feature is advantageous also from the viewpoint of the manufacturing cost. The wave guide tubes are provided with a plurality of the coupling ports of circular or square shape and diameters of these circular or square ports formed through each of the wave guide tubes are gradually enlarged so as to have the coupling coefficient gradually increasing as closer to the distal end of the wave guide tube the coupling ports are. The plasma generating chamber is formed at positions corresponding to the respective coupling ports of the respective wave guide tubes with openings communicating with the respective coupling ports so that these openings are blocked off by the dielectric plates and thereby the plasma generating chamber is sealed hermetically. Furthermore, there are provided a plurality of wave guide tubes, each of these wave guide tubes being formed with a plurality of coupling ports adapted to uniformize the microwave energy radiated through these ports and thereby plasma of a large area is generated with high and uniform density. The invention allows the dielectric windows to be separated one from another and the dielectric windows as thin as possible can be used. In consequence, the plasma generator using microwave can be easily implemented at a rational manufacturing cost. BRIEF DESCRIPTION OF THE DRAWINGS FIG. 1 is structural diagram schematically illustrating a typical embodiment of the plasma generator according to the invention; FIG. 2 is a structural diagram schematically illustrating this plasma generator in a section taken along a line A--A in

FIG. 1; FIG. 3 is a diagram illustrating placement and function of wave guide tubes constituting the plasma generator and of coupling ports of these wave guide tubes; FIG. 3A is a diagram illustrating placement and function of wave guide tubes having square coupling ports.

FIG. 4 is a fragmentary diagram illustrating the plasma generator; FIG. 4A is a fragmentary diagram illustrating a plasma generator with square coupling ports. FIG. 5 is a graphic diagram plotting plasma characteristics based on a result of experiments conducted on this embodiment;

FIG. 6 is a diagram schematically illustrating a RF parallel-plate type plasma generator of prior art; FIG. 7 is a diagram schematically illustrating a RF induction type plasma generator of prior art; and FIG. 8 is a diagram schematically illustrating a plasma generator of prior art using microwave.

DESCRIPTION OF THE PREFERRED EMBODIMENT

Details of the present invention will be more fully understood from the description of its typical embodiment given hereunder in reference with the accompanying drawings. FIG. 1 is a structural diagram schematically illustrating the plasma generator in a section taken along axis of one of the wave guide tubes and FIG. 2 is a structural diagram schematically illustrating this plasma generator in a section taken along a line A--A in FIG. 1. For convenience of description, it is assumed in this embodiment that X-axis represents a direction in which the wave guide tubes are arranged in parallel one to another and Y-axis represents a direction in which axes of the respective wave guide tubes extend. As illustrated, this plasma generator 40 comprises a plasma generating chamber 41, three wave guide tubes 42, 43, 44 arranged on upper surface of the plasma generating chamber 41 so as to extend in parallel one to another in the direction

X, each of these wave guide tubes 42, 43, 44 being provided with three coupling ports arranged in a direction of the tube axis (i.e., in the direction

Y). The coupling ports are circular radiation ports adapted to radiate microwave electric power Po into the plasma generating chamber 41 and, as will be seen in FIG. 1, each of the wave guide tubes, for example, the wave guide tube 42 is formed with three coupling ports 42a, 42b, 42c arranged in the axial direction of this wave guide tube 42. These coupling ports 42a, 42b, 42c respectively have diameters gradually enlarged from a supply side of the microwave electric power Po toward a distal end 42T of the wave guide tube 42 so that a coupling coefficient to the microwave electric power Po may gradually increase.

Such arrangement is in view of the fact that the microwave electric power Po entering from a power source into the wave guide tube 42 gradually decreases toward the distal end 42T of the wave guide tube 42. While FIG. 1 merely illustrates the wave guide tube 42 and its coupling ports 42a, 42b, 42c, it will be obviously understood that the wave guide tube 43 is provided with coupling ports 43a, 43b, 43c (coupling ports 43a and 43c are not shown in FIG. 2) and the wave guide tube 44 is provided with coupling ports 44a, 44b, 44c (coupling ports 44a and 44c are not shown in FIG. 2). The plasma generating chamber 41 is formed through its upper wall with circular ports communicating with the coupling ports, respectively, and these circular ports of the plasma generating chamber 41 are blocked off by dielectric plates (e.g., plates of quartz or alumina) having peripheral edges thereof tightly engaged with peripheral edges of the associated ports to form dielectric windows 45 adapted to block the plasma generating chamber 41 off from outside air. These dielectric windows 45 are preferably as thin as possible so far as these windows 45 can resist the ambient pressure. Referring to FIG. 1, reference numeral 46 designates a vacuum pump and reference numeral 47 designates a gas charging line. FIG. 3 is a diagram illustrating placement of the coupling ports as have been described above. While the placement of these coupling ports is illustrated with respect only to the wave guide tube 42, it should be understood that such placement is true also with respect to the other wave guide tubes 43, 44. In FIG. 3, X1 designates a position at which a longitudinal axis of the wave guide tube 42 extends, Y1, Y2, Y3 respectively designate positions at which this wave guide tube 42 is formed with the coupling ports 42a, 42b and 42c, and YY designates a short-circuit plate defining the distal end of this wave guide tube 42. A dimension by which the coupling ports 42a, 42b are spaced from each other is set to Y2-Y1=(2n+1).multidot..lambda.g/2, a dimension by which the coupling ports 42b, 42c are spaced from each other is set to Y3-Y2=(2n+1).multidot..lambda.g/2 and a dimension by which the coupling port 42c and the short-circuit plate YY are spaced from each other is set to YY-Y3=.lambda.g/4.

In these equations, lambda .g represents a wave length within the tube and n represents integer.

With the coupling ports 42a, 42b, 42c arranged as has been described above, the microwave is radiated through these coupling ports and the associated dielectric windows 45 into the plasma generating chamber 41 in a manner as will be described on the assumption that the microwave electric power Po is supplied from the side adjacent the coupling port 42a and the coupling ports 42a, 42b, 42c respective have coupling coefficients K.sub.1, K.sub.2, K.sub.3. The coupling coefficients depend on the sizes of the respective coupling ports and therefore K.sub.1 <K.sub.2 <K.sub.3. More specifically, the microwave electric power (free-traveling wave electric power plus reflective wave electric power) is radiated through the respective coupling ports 42a, 42b, 42c and the associated dielectric windows 45 in a manner as follows: through the coupling port 42a: through the coupling port 42b: through the coupling port 42c:

The wave reflected on the short-circuit plate YY is phase-shifted from the free-traveling wave by 180.degree. and, in consequence, the free-traveling wave and the reflective wave are in phase at the respective coupling ports. That is, these different types of wave electric power are combined with each other and radiated through the respective coupling ports into the plasma generating chamber 41. The reflective wave is expressed by: In order that the microwave electric power Po can be radiated through the respective coupling ports 42a, 42b, 42c into the plasma generating chamber as equally as possible, the coupling coefficients of the respective coupling ports may be set, for example, to K.sub.1 =0.3, K.sub.2 =0.4 and K.sub.3 =0.5. In this case, the equations (1). about.(4) will result in: through the coupling port 42a: 0.32Po through the coupling port 42b: 0.32Po through the coupling port 42c: 0.32Po by reflection: 0.04Po. In this way, the microwave electric power Po is absorbed in the vicinity of the respective coupling ports and equally radiated through the respective coupling ports into the plasma generating chamber 41 so that the plasma 48 may be homogenously generated within the plasma generating chamber 41. The microwave interacts with electrons in the plasma generated in this manner to be subjected to Landau damping and the energy due to this Landau damping is consumed for acceleration of the electrons and contributes to ionization of gaseous molecules.

The Landau damping effect is proportionately higher as higher the density of the electrons is. The plasma 48 generated within the plasma generating chamber 41 spreads by diffusion. Diffusion is a statistical phenomenon and dependence of the density on a range of diffusion results in Gauss distribution. In other words, the plasma generated in the vicinity of the coupling ports 42a, 42b, 42c present independent Gauss distributions, respectively. The density of the electrons in the plasma in the vicinity of the respective dielectric windows is proportionately higher as thinner the dielectric windows 45 are. The microwave is thus rapidly attenuated in the vicinity of the windows and consequently the plasma of higher density is generated in the vicinity of the windows. In this way, electromagnetic interference among a plurality of windows is eliminated, making it possible to propagate the microwave substantially free from reflection. In view of this, it is possible to make the respective Gauss distributions of plasma overlap one another and thereby to ensure the plasma 48 of a uniform density distribution by appropriately selecting the distance between each pair of the adjacent wave guide tubes 42, 43, 44 and the number as well as the intervals of the coupling ports. FIG. 3A is a diagram illustrating an embodiment generally like that shown in FIG. 3, but with square coupling ports 42a, 42b, 42c. FIG. 4 is a diagram illustrating a specific example of the plasma generator 40. FIG. 4A is a diagram illustrating a specific example of a plasma generator 50 that is generally like the plasma generator of FIG. 4, but with square coupling ports. FIG. 5 is a graphic diagram plotting plasma characteristics based on a result of experiments conducted on the embodiment 50 illustrated in FIG. 4. Referring to FIG. 5, a characteristic curve 42A indicates Gaussian plasma characteristic associated with the coupling port 42a, a characteristic curve 42B indicates Gaussian plasma characteristic associated with the coupling port 42b and a characteristic curve 42c indicates Gaussian plasma characteristic associated with the coupling port 42c.

It has been found from the experiment that each plasma 42A, 42B, 42C achieves the plasma density homogeneity with deviation of +-.5% or less over a width of 70 mm. A characteristic curve 42Z indicates a composite characteristic of those exhibited by the plasma 42A, 42B and 42C. According to this composite characteristic, combination of the plasma 42A, 42B and 42C enables the homogeneity of plasma density to be ensured with deviation of+-.5% or less over a width of 280 mm. With this plasma generator 50, placement of the wave guide tubes 42, 43, 44 have been optimized and it has been found that the plasma having a large area of 0.3 m.times.0.3 m, an electron density of 1.times.10.sup.12 cm.sup.-3 and a homogeneity with deviation of .+-.5% or less can be generated. While the plasma generator 50 is provided with the rectangular plasma generating chamber 41 taking account of the fact that the workpiece is often rectangular and of relatively large area, the plasma generating chamber 41 may be of any shape other than the rectangular shape. Obviously, it is essential not only to reinforce the plasma generating chamber 41 and thereby to prevent the plasma generating chamber 41 from being collapsed by ambient pressure but also to provide on one or both of the side walls of the plasma generating chamber 41 with load lock or locks 51 if continuous processing is intended. In the plasma generator as has been described above, gas such as Cl.sub.2 or F.sub.2 is charged through the gas charging line 47 for etching process and gas such as CH.sub.4 or C.sub.2 H.sub.6 is charged through the gas charging line 47 for thin film coating process. As will be apparent from the foregoing description of the embodiment and the specific example thereof, it is unnecessary to make the dielectric windows 45 continuous one to another. In other words, it is possible to separate these windows 45 one from another to correspond to the associated coupling ports. In this way, a relatively thin dielectric plate can be used to define each of the windows. This is an important feature from the viewpoint of the manufacturing cost. Without departing the scope of the invention, the number as well as the intervals of the wave guide tubes and the number as well as the intervals of the coupling ports formed through the respective wave guide tubes can be appropriately selected. Furthermore, the shape of the coupling ports is not to circular shape and may be square to achieve the same effect.

Next PAGE are the drawing:

FIG. 3A

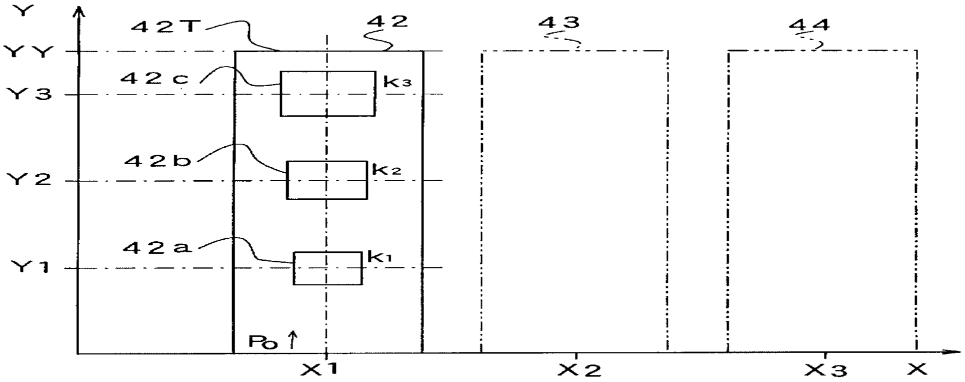

FIG. 4

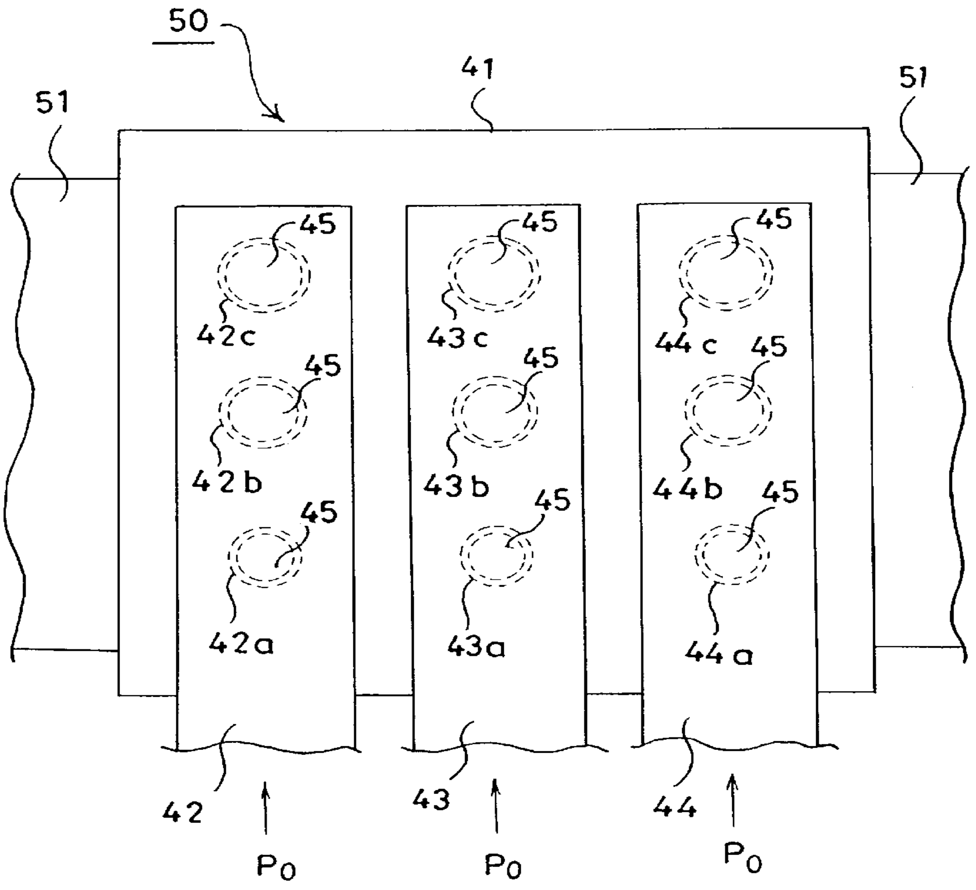
50
41
51
51
45
42c
45
42b
45
42a
45
43c
45
43b
45
43a
45
44c
45
44b
45
44a
42
43
44
Po
Po
Po

3.5.1.7. Hackmyer Saul

USP #: 4,265,721; 2335 N.E. 172nd St., North Miami Beach, FL 33160

Commercial hydrogen gas production by electrolysis of water while being subjected to microwave energy

Water is electrolytically decomposed in a microwave-fed resonant cavity whereby electrolysis is so greatly enhanced as to make the commercial production of hydrogen and oxygen gasses a practicality.

BACKGROUND OF THE INVENTION

The fact that water can be decomposed into its hydrogen and oxygen elements by electrolysis has been known for many decades. Heretofore, however, commercial process has been so costly as to be impractical to produce these gasses for widespread commercial use. At the same time, because of the dwrindling supply and the increasing cost of conventual sources of energy, such as fossil fuels and natural gas, alternative sources of energy for fueling automotive vehicles, for example, are currently being actively sought. The use of liquified hydrogen gas as such an alternative fuel has a distinct advantage in that it is substantially non-polluting. Up until now, however, the cost of commercially producing hydrogen gas by electrolysis has been prohibitive. It is, accordingly, the principal object of this invention to provide an improved method and means for the electrolysis of water which so enhances the electrolytic process as to enable production of hydrogen gas so economically as to be practicable on a heretofore unknown commercial scale. A more particular object of my invention is to provide an electrolysis method of the above nature wherein the electrolytic fluid container is disposed within a resonant cavity or chamber fed by microwave energy, whereby such intense agitation of the electrolyte molecules is effected as tremendously increases electron vibration between the electrical poles, as a consequence of which hydrogen gas, as well as oxygen, will be given off at high rates and in such large quantities as heretofore not achievable. Other objects, features and advantages of the invention will be apparent from the following description.

DETAILED DESCRIPTION OF THE PREFERRED EMBODIMENT

In accordance with the invention, microwave energy produced by a microwave generator will be fed to a resonant cavity of such size as will contain one or more electrolytic cells comprising a synthetic plastic material, glass or other non-energy absorbing containers holding the water to be electrolyzed. Microwave energy at a frequency of 915 Mh (allocated for industrial use by governmental authority) is particularly effective in my method. Suitable amounts of salt may be added to the water of the electrolyte to produce the conductive negative ions. Gas passage conduits surrounding the electrolytic poles with their lower ends immersed in the electrolyte, will collect the electrolytically released gasses for flow into respective gas collecting tanks. The gas so collected in the tanks may then be liquified by compression for convenient commercial use. It will be understood that my method for the commercial production of hydrogen gas also results in the production in commercial quantities (approximately 1/2 the amount by volume) of oxygen gas. Therefore, the hydrogen and oxygen gasses can be electrolytically produced in a portable microwave resonant chamber apparatus that can be installed in a vehicle for directly supplying hydrogen and oxygen for combustion in the combustion chambers of the vehicle engine.

While I have described herein only the basic method by means of which hydrogen and oxygen gas can be produced commercially by electrolysis in a microwave resonant cavity or chamber, it is to be understood that the method described and claimed herein is presented as illustrative, only and not in a limiting sense. The invention, in brief, comprises all the methods and embodiments coming within the scope and spirit in the following claims.

3.5.1.8. Microwave Water Engine

PRELIMINARY PLANS

TO RUN YOUR CAR ON TAP WATER!

IT ALSO WORKS ON YOUR
TRUCK / RV / MOTORCYCLE / AIRPLANE (ETC)

Will This Work?

These plans were sent to the *Spirit of Ma'at* anonymously, from someone who does not want his or her name printed (for obvious reasons).

We have had them checked by an expert who believes that they are real.

We also have talked with another individual who has patented a similar device, and we know by personal experience that the technology is sound.

So although we cannot guarantee it, we believe these plans will enable you to build a car that runs on water.

If you test it out, though, do as the writer suggests and use an old car that doesn't represent a loss of value if you can't make it work. And leave everything intact so that you can always reconnect back to gas if you have to.

But if you do get it working, please send us your experience for our readers. You could be a national hero and help save our country and our world.

We know for certain that an automobile will run on water. So this could be an interesting project for you mechanical types, with a great reward of never having to purchase gasoline for the rest of your life — and helping humanity at the same time.

Re: The Need to Rustproof Your Exhaust System

It is possible to make a hybrid of both gas and water (a system that is being tested now in Mexico), which would eliminate the need to open the head and remove the exhaust system. Just a thought. It takes only a small amount of gas to keep the system dry.

The text sent from the anonymous individual was edited slightly for better reading. The following is his/her words and drawings, which has been given into the public domain.
— *Spirit of Ma’at LLC*

Introduction

In working with these instructions, you will first want to print out the diagrams at Figure 1 (labeled Figure 4) and Figure 2(labeled Figure 5). The diagrams are large files, so please be patient while they load.
It is suggested you try this out to begin with on a second vehicle you own, one that you don't need to live with everyday, until you perfect this technology.

Do-it-yourself plans allow the individual (that's you and me, folks) to make a difference. This is the easiest and lowest-cost way to convert your car to run on (relatively) free energy.

Now, with existing technology, anyone can stand up and make a difference by reducing the local automotive pollution, eliminate gasoline expenses, help restore our atmosphere, and breathe a little easier.

In putting these plans into operation, you will be making use of your entire existing system except for the fuel tank and the catalytic converter.

The Plan

Build and install a low-cost alternative method for running your vehicle (internal combustion engine) on tap water, using off-the-shelf components.

This is simply an efficient way to convert ordinary tap water into gaseous hydrogen and oxygen, and then burn these vapors in the engine, instead of gasoline.

This "minisystem" runs easily from your existing battery and electrical system, and it plugs into your carburetor with simple off-the-shelf fittings.

You will be installing a plastic water tank, a control circuit, a reaction chamber, a hi-pressure carb/FI fitting, and 3 gauges, and then hooking into your existing carb/FI.

The simplicity comes from its being an "on-demand" system requiring no fancy storage or plumbing. You crank the gas pedal or throttle, and you electrically create more vapor for immediate consumption, on demand; low-high flow rate as needed, from idle to maximum power. The only real change is that you are using tap water as fuel, instead of the traditional petroleum-based fuel.

Given a choice, which way would you choose?

Frequently Asked Questions

Q: Does it really work ?
A: Yes; this is well-established technology dating back to stainless steel. But be sure to follow these instructions using the proper mechanical and electrical assembly techniques, as this plan incorporates the best qualities of several techniques.

Q: How does it qualify as "free energy"?

A: If you're paying someone for the water you use, then it is not strictly free. But the alternative is to keep buying into expensive gasoline and its resultant hydrocarbon pollution.

Q: Is it safe?
A: Technically, it is safer than running on fossil fuel because you are no longer choking on your own emissions (health-wise). In general, it is practically as safe as your current gasoline arrangement. You will be installing a few simple safety devices, using current automotive standards.

Q: What kind of performance can I expect?
A: Properly adjusted, your modified vapor-only fuel system will run cooler, and at a modestly higher power level. The mileage performance expected from this design ranges from 50-300 mpg (of water), depending on your adjusting skills.

Q: Can I do the modification myself?
A: Why not? If you don't have any mechanical skills, and you know someone with basic mechanical and/or electrical skills, you can even delegate some of the construction. If you are using a fuel-injected engine, you may have to get a mechanic's opinion. [There will have to be an adapter inserted into the fuel-injection system, just as you would have to do if you were going to run on propane, hydrogen, or natural gas. Ed.)

Q: What is the environmental impact that my vehicle will have?
A: It will be producing H_20 steam (water vapor) and unburnt O_2 (Oxygen). Hence, it will be cleaning the environment, rather than dumping nauseous toxins into it. Plus you will be helping to save our dwindling supply of atmospheric oxygen. Any excess vapor in the reaction becomes either steam or oxygen. You can also expect to be receiving more than casual interest from those around you.

Q: Isn’t this really a steam engine?
A: No. Really. Exceedingly high temperature and pressure are not used. This is strictly an internal-combustion engine (burning orthohydrogen) with residual steam in the exhaust as a by-product.

Read This

There are a few things you should know about gasoline:
Gasoline as a fuel is not necessary; it is optional.

Gasoline versus Water

There is a lot of thermochemical energy in gasoline, but there is even more energy in water. The DOE (Department of Energy) has quoted about 40%, so it is probably much more than that.

Most people are unaware that "internal combustion" is defined as "a thermo-vapor process" — as in "no liquid in the reaction." Most of the gasoline in a standard internal combustion engine is consumed, (cooked, and finally, broken down) in the catalytic converter after the fuel has been not-so-burnt in the engine. Sadly, this means that most of the fuel we use in this way is used only to cool down the combustion process, a pollution-ridden and inefficient means of doing that.

How It Works

Exceedingly simple. Water is pumped as needed to replenish and maintain the liquid level in the chamber. The electrodes are vibrated with a 0.5-5A electrical pulse which breaks 2(H2O) => $2H_2 + O_2$. When the pressure reaches say 30-60 psi, you turn the key and go. You step on the pedal, you send more energy to the electrodes, and thus more vapor to the cylinders; i.e. fuel vapor on demand.

You set the idle max-flow rate to get the most efficient use of power, and you're off to the races.

In the big picture, your free energy is coming from the tap water in an open system, as the latent energy in the water is enough to power the engine and hence drive the alternator and whatever belt-driven accessories. And the alternator is efficient enough to run the various electrical loads (10 - 20 amps), including the additional low current to run this vapor reaction. No extra batteries are required.

STEP BY STEP CONSTRUCTION

OVERVIEW - **Here is the suggested sequence of steps:**

1. Install the CHT (or EGT) gauge and measure your current operating temp range (gasoline), for comparison.
2. Build and test the controller to verify the correct pulse output.

3. Build the reaction chamber and test it with the controller (i.e pressure out).

4. Install the tank, controller, chamber, and pressure fittings.

5. Run engine and adjust the control circuit as necessary for best performance.

6. Install the stainless steel valves and get the pistons/cylinders coated with ceramic.

7. Coat the exhaust system with ceramic without the catalytic converter (or let it rust out and then replace the whole dang thang with stainless steel pipe sections).

YOU WILL NEED

- plastic water tank with pump and level sensor.
- control circuit, wiring, connectors, and epoxy.
- reaction chamber with electrodes and fittings.
- 3/8" stainless steel flex-tubing, fittings and clamps.
- carb/FI vapor-pressure fitting kit. - pressure, CHT (or EGT), & level gauges.
- stainless steel valves.
- copper mesh junction.

- ceramic surface treatment for cylinders & pistons.
- stainless steel or ceramic treated exhaust assembly.

BASIC TOOLS

- drill, screwdriver and pliers
- hole cutter
- wire-wrap, solder-iron and clippers
- DVM and oscilloscope.

REACTION CHAMBER

Construct as shown in the diagram. Use a section of 4" PVC waste pipe with a threaded screw-cap fitting on one end and a standard end-cap at the other. Make sure to drill-and-epoxy or tap threads thru the PVC components for all fittings. Set and control the water level in the chamber so that it well submerses the pipe electrodes; yet leave some headroom to build up the hydrogen/oxygen vapor pressure. Use stainless steel wires inside the chamber or otherwise use a protective coating; use insulated wires outside. Ensure that the epoxy perfects the seal, or otherwise lay down a bead of water-proof silicone that can hold pressure.

The screw fitting may require soft silicone sealant, or a gasket; its purpose is to hold pressure and allow periodic inspection of the electrodes. No leaks, no problems. Make sure you get a symmetric 1-5mm gap between the 2 stainless steel pipes. The referenced literature suggests that the closer to 1mm you get, the better. **You will want to get your chamber level sensor verified before you epoxy the cap on.**

Make your solder connections at the wire/electrode junctions nice, smooth, and solid; then apply a water-proof coating, e.g. the epoxy you use for joining the pipes to the screw cap. This epoxy must be waterproof and be capable of holding metal to plastic under pressure. **You will want to get your chamber level sensor verified before you epoxy the cap on.**

CONTROL CIRCUIT

The diagrams show a simple circuit to control and drive this mini-system. You are going to make a 'square-pulse' signal that 'plays' the electrodes like a tuning fork; which you can watch on an oscilloscope. The premise given by the literature is: the faster you want do go down the road, the 'fatter' you make the pulses going into the reaction chamber. Duty cycle will vary with the throttle in the vicinity of 90%MARK 10%SPACE (OFF/ON).

There is nothing sacred about how the pulse waveform is generated; there are many ways to generate pulses, and the attached diagrams show a few. The NE555-circuit approach (see diagrams) is from the referenced patent. The output switching transistor must be rated for 1-5 amps @ 12VDC (in saturation).

Go with a plan that works for you or your friendly neighborhood technoid or mechanic, and go get all the circuit elements from your local electronics store, such as Radio-Shack or Circuits-R-Us, including the circuit board, IC sockets, and enclosure/box.

Digi Key has better selection, service, and knowledge; plus they have no minimum order. Be sure to use a circuit board with a built-in ground plane, and to accommodate room for mounting

2 or 3 of the gauges. Mounting the reaction chamber in the engine compartment will require running a stub to your pressure gauge where you can watch it.

You can easily make 30-gauge wire-wrap connections between the socket pins and thru-hole discrete components having wire leads. Also make sure to get spec sheets on any IC you use. More details of the best circuits to use will be announced pending prototype testing. **You will want to get your chamber level sensor verified before you epoxy the cap on.**

Throttle Control
If you have a throttle position sensor, you should be able to access the signal from the sensor itself OR from the computer connector. This signal is input to the circuit as the primary control (i.e. throttle level = pulse width = vapor rate).

If you don't have such a signal available, you will have to rig a rotary POT (variable resistor) to the gas linkage (i.e. coupled to something at the gas pedal or throttle cable running to the carb or FI. If you make the attachment at the carb/FI, be sure to use a POT that can handle the engine temp cycles. Don't use a cheezy-cheapy POT; get one rated for long life and mechanical wear; mount it securely to something sturdy and stationary that will not fall apart when you step on the gas.
Control Range. The full throttle RANGE (idle-max) MUST control the vapor rate, i.e. pulse-width (duty). The resistor values at the throttle signal must allow the throttle signal voltage, say 1-4 Volt swing, to drive the VAPOR RATE. You will be using this voltage swing to generate a 10% ON 'square' pulse. The patent implies using a 'resonant' pulse in the 10-250 KHz frequency range; but it is not explicitly stated so.

In this circuit, you will simply tune to whatever frequency makes the most efficient vapor conversion. You will have to get into the specs for each IC you use, to insure you connect the right pins to the right wires, to control the frequency and pulse width. You can use spare sockets to try out different discrete component values. Just keep the ones that are spec-compatible in the circuit, and get the job done.

You crank up the throttle signal and put more electrical energy (fatter pulses) into the electrodes; verify you can get 10% duty on the scope (2 - 100 used on the horizontal time-base). Your averaging DVM will display the 90%-10% DC voltage across the output transistor (Vce or Vds or Output to Ground). Set and connect DVM in the supply current and measure .5 - 5 amps, without blowing the DVM fuse. Now verify that you got everything you wanted.

Verify your wiring connections using your DVM as a continuity detector. Check your wiring 1 at a time and yellow line your final schematic as you go. You can best use board-mount miniature POTs for anything you want to set-and-forget. The LEDs are there to give you a quick visual check of normal vs abnormal operation of your new creation. **You will want to get your chamber level sensor verified before you epoxy the cap on.**

CARB/FI CONNECTION

The diagrams also show that fittings are required to the carb/FI l. There are ready-made kits (such as by Impco) available for making your pressure fittings to the carburetor or fuel-injector. You will necessarily be sealing the built-in vents and making a 1-way air-intake.

The copper mesh comprises the inadvertent backfire' protection for the reaction chamber. Make sure that all vapor/duct junctions are air-tight and holding full pressure without leakage. Your new 'system' is considered successful and properly adjusted when you get the full power range at lower temp and minimum vapor flow without blowing the pressure safety valve.

CHT (or EGT)

Monitor your engine temp with the CHT (cylinder head temp) or EGT (exhaust gas temp) instead of your original engine temp indicator (if any). Your existing gauge is **too slow** for this application and will not warn you against overheating until after you have burnt something. **Make sure that your engine runs no hotter than in the gasoline arrangement.** VDO makes a CHT gauge with a platinum sensor that fits under your spark plug against the cylinder head (**make sure it is clean before you re-install your spark plug (as this is also an electrical ground)**.

ENGINE/EXHAUST TREATMENT

et the valves replaced with stainless steel ones **and** get the pistons/cylinders ceramic-treated ASAP when you have successfully converted and run your new creation. Do not delay as these items **will rust**, either by sheer use or by neglect (i.e. letting it sit). You could make max use of your current exhaust system by using it with your new deal until it rusts through, then have your mechanic or welder friend to fit a stainless steel exhaust pipe (no catalytic converter is required). But it could be easier and cheaper to send your existing exhaust system out for the ceramic treatment, and then simply re-attach it to the exhaust ports.

GENERAL

1. Do not discard or remove any of the old gasoline setup components, e.g. tank, carb/FI, catalytic converter, unless necessary. Better to always leave an easy way to revert to something that at least runs, just in case. Some people are leaving their gasoline setup completely intact, and switching back and forth at will, just to have a backup plan.

2. Set your throttle circuit so that you get minimum vapor flow at **idle**, and maximum vapor flow at **full power** without blowing the pressure relief valve. In this way, you control how 'lean' your mixture is by the strength of the pulse (i.e. “fatness” at the optimum pulse frequency).

3. If you just don't get enough power (at any throttle setting), it means that you need to (1) change the pulse frequency, (2) change the gap between the electrodes, (3) change the size (bigger) electrodes, **or** (4) make a higher output pulse voltage (last resort). Always use an output transistor, such as a MOSFET, that is rated for the voltage and current you need to get the job done. OK so you might have to play around with it some. Isn't that where all the Fun is anyhow?

4. If you get **any** engine knock our loud combustions (not compensated by adjusting the timing), it means that you need to install an additional coil in the chamber, and drive the coil with an

additional pulse signal (about 19 Hz on the .1sec time base). Here, you will be slowing down the burn rate just enough so that the vapors burn thru out the power stroke of the piston. Be sure to include a board-mount POT to set the correct strength of this 2nd pulse signal into the coil. This is a stainless steel coil of about 1500 turns (thin wire) that you can arrange like a donut around the center pipe (but NOT touching either electrode), directly over the circular 1-5mm gap. You want **no knocking** at any power/throttle setting; smooth power only, but also no excess hydrogen leftover from the combustion.

5. Build the canister(s) as tall as you can without compromising your ability to mount them conveniently near the dash panel, or in the engine compartment, as the case may be. This way, you can always make the electrodes bigger, if necessary without undue hardship. Remember that anything in the engine compartment should be mounted in a bullet-proof, vibration and temperature tolerant fashion.

6. If you have to drill a thru-hole for wiring or plumbing thru metal, make sure to also install a grommet for protection against chafing. Always watch your chamber pressure range from IDLE (15-25 psi) - FULL POWER (30-60 psi). Set your safety-pressure relief-valve to 75 psi and make sure it's rated for much higher.

7. **Shut OFF the power switch and pull over if there is any malfunction of the system**. Your engine will last longest when it still develops FULL POWER+ at some minimum temperature that we are sure you can find, by leaning back the Royal Vapor Flow and/or by making use of the water-vapor cooling technique. Keep good mpg performance records, and periodic maintenance/inspection. Keep it clean; save some money; clean the air; heal the planet; happy motoring; tell a friend; enjoy your freedom and self-empowerment.

8. There lacks documented material for perfecting this vapor system thru a fuel injector; there may be some details you will discover on your own as working prototypes progress. For example, you may be restricted to inject the hydrogen/oxygen vapor **without any** water vapor, as it may rust the injectors. If engine temp and CHT is a problem, then you will want to re-think your plan, e.g. ceramic-coating the injectors. There is always “replacing the FI system with a Carb.”

9. If you install the water-vapor system (for lower operating temp/stress), you will want to lean the mixture (vapor/air) for minimum vapor flow rate to achieve any given throttle position (idle - max). Make sure that you get a minimum flow for IDLE and a modestly sufficient flow for MAX, that does the cooling job without killing the combustion.

10. If you cannot find stainless steel pipe combinations that yield the 1-5mm gap, you can always regress back to alternating plates of +/- electrodes.

11. If you are concerned about the water freezing in your system, you can (a) add some 98% isopropyl alcohol and re-adjust the pulse frequency accordingly; or (b) install some electric heating coils.

12. **Do not let ANYONE ever compromise your dream, your freedom, your independence or your truth.**

REFERENCES

- Stephen Chambers 'Apparatus for Producing Orthohydrogen and/or
- Parahydrogen' US Patent 6126794, `uspto.gov`
- Stanley Meyer 'Method for the Production of a Fuel Gas' US Patent 4936961,
- uspto.gov
- Creative Science & Research, 'Fuel From Water', fuelless.com
- Carl Cella “A Water-Fuelled Car” *Nexus* Magazine Oct-Nov 1996
- Peter Lindemann “Where in the World is All the Free Energy”,
- George Wiseman “The Gas-Saver and HyCO Series” `eagle-research.com`
- C. Michael Holler “The Dromedary Newsletter” and “SuperCarb Techniques”
- Stephen Chambers “Prototype Vapor Fuel System”
-

COMMON LAW COPYRIGHT #285714: All rights to the use and duplication of these plans are hereby reserved for the People, in their efforts to heal and restore the environment. Dare to express your uniqueness and environmental ideals. This technology is an exercise in responsible self-determination.

DISCLAIMER: The Spirit of Ma'at LLC and the Spirit of Ma'at ezine and the author of this document assumes no liability for the use or misuse of this information; which is made available as public-domain information and free of charge, for the purposes of education, ecology, health, well-being, freedom, liberty, and pursuit of happiness.

Microwave Water Engine

The device is an engine in which small quantities of water are turned into steam (oxyhydrogen) by the use of a magnetron (as found in microwave ovens).

PARTS NEEDED:

1. Magnetron from medium power microwave oven.

2. Small 4-stroke single cylinder lawn mover engine or similar engine with 'old style' points and

ignition system.

3. Automotive alternator with built-in rectifier and regulator, also a 12 volt auto battery.

4. "Trigger" mechanism from an aircraft "strobe" landing light.

INSTRUCTIONS:
1. The magnetron fits into the spark plug hole.
2. The distributor points are modified so that the contact is closed when the piston is at the top dead center and this contact is used to activate the aircraft strobe mechanism.
3. The high voltage from the strobe is connected to directly fire the magnetron which in turn produces steam which moves the piston.

4. The engine turns the alternator which keeps the battery charged, which supplies the electrical power for the magnetron.

CAUTION AND TIPS

1. Be careful around the magnetron. KEEP IT SHIELDED WITH METAL. IT CAN CAUSE SEVERE BURNS THAT MAY NOT BE READILY VISIBLE WHEN THEY FIRST OCCUR.

2. The 'strobe' trigger delivers a very high voltage which can jump to ground. WEAR RUBBER SOLED SHOES AND INSULATE WELL.

3. Be sure to modify the distributor points so they close at the top dead center. Timing advance depends on the power of the magnetron used and the amount of water. Try different carb jet sizes -- drill out if needed.

4. Due to variables, don't expect high engine speeds without a little experimentation due to variables.

5. Start with a fully charged battery or your alternator won't work.

6. The energy produced is in excess of the power required to run the alternator but until you get the RPM up, and the parts working in harmony, it may be best to use a battery charger instead of an alternator.

7. An easy way to measure net power output after you have the alternator on line is to run a few 12 volt lights from the battery. You will see that the battery stays charged even with the lights on and the motor keeps on going.

8. Due to safety reasons, switch on the radiation measuring equipment.
9. Although I have not tried it, the idea of vaporizing water with microwaves should also work well in a converted turbine.

Zeichnungen

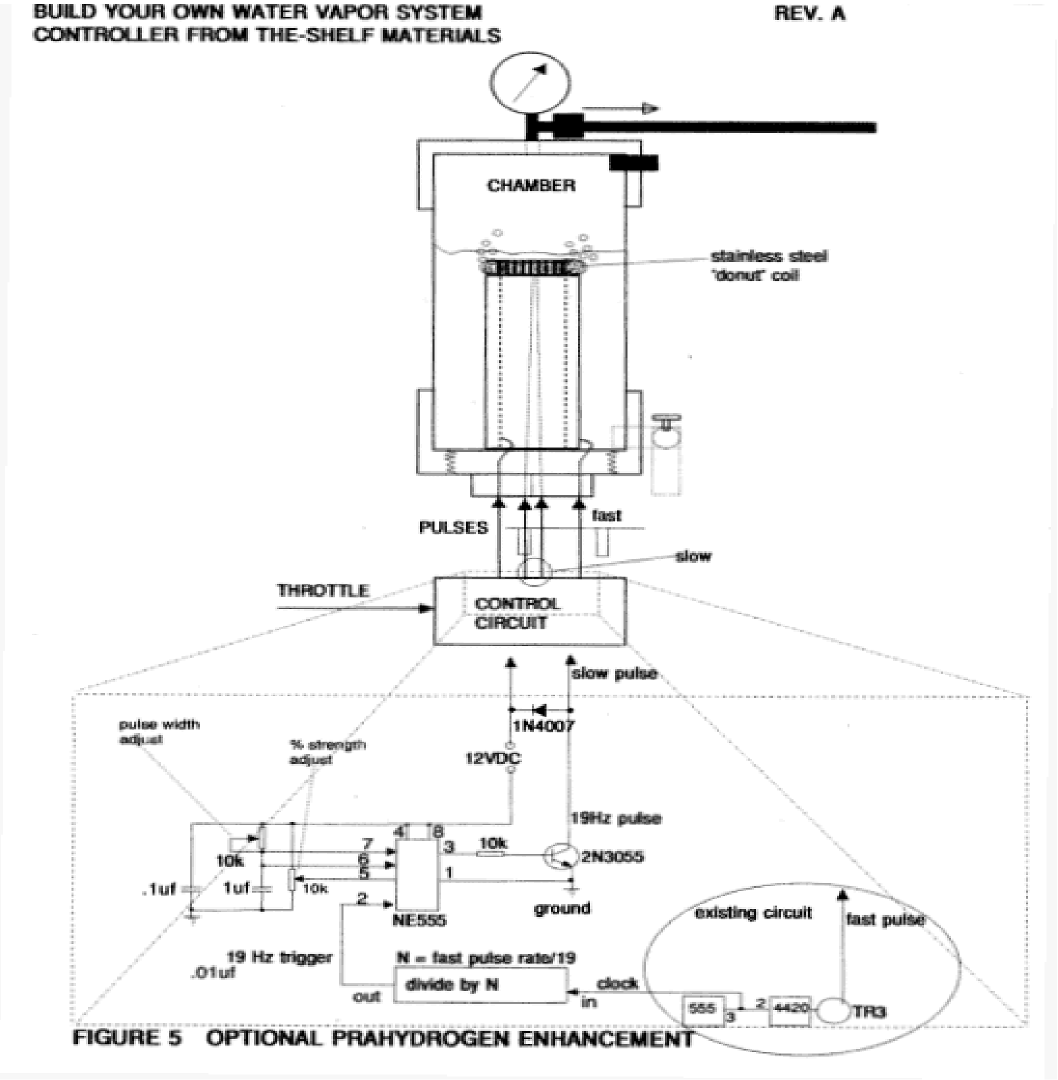

FIGURE 5 OPTIONAL PRAHYDROGEN ENHANCEMENT

BUILD YOUR OWN WATER VAPOR SYSTEM CONTROLLER FROM THE-SHELF MATERIALS REV. A

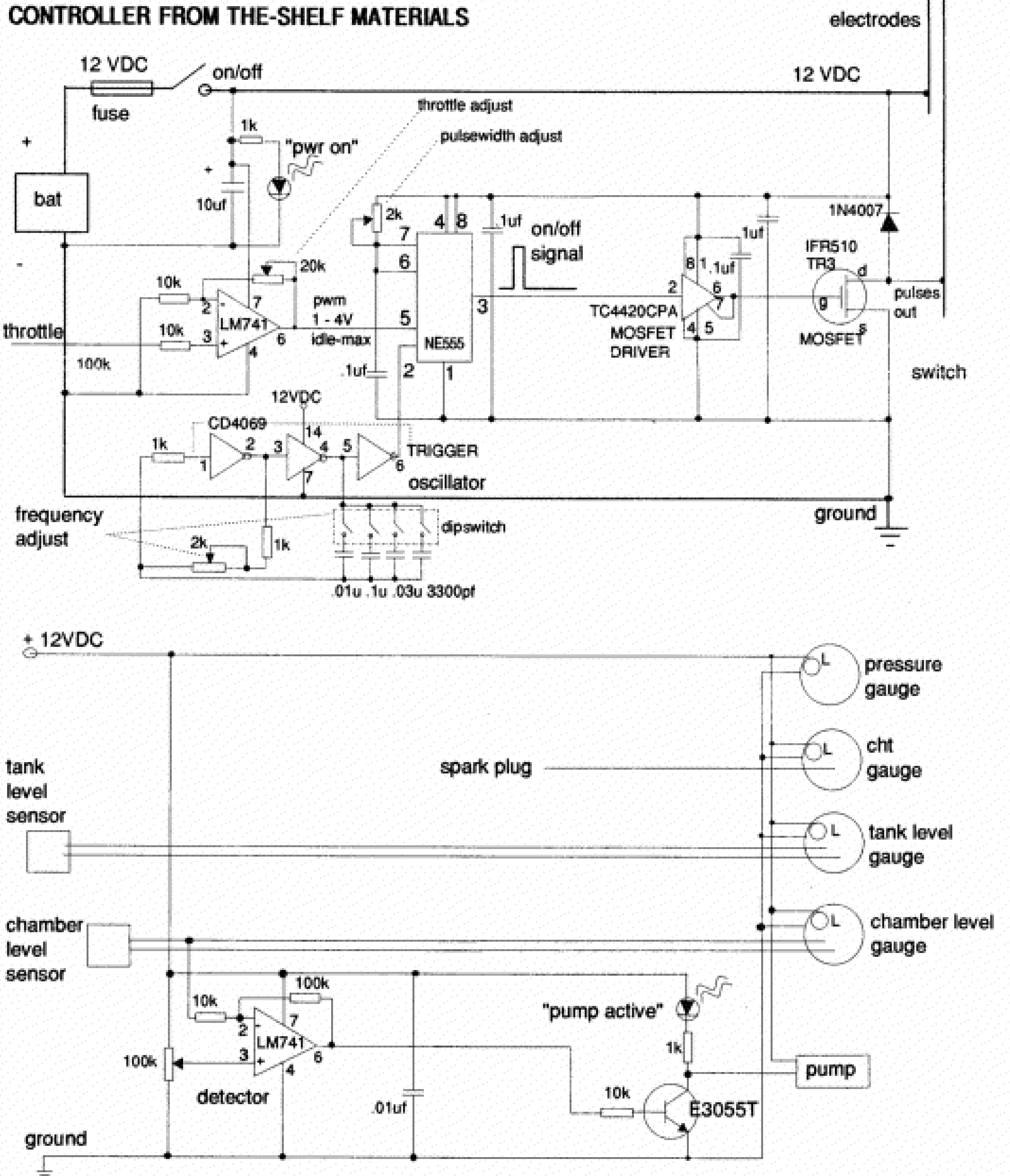

FIGURE 4 E-SCHEMATIC

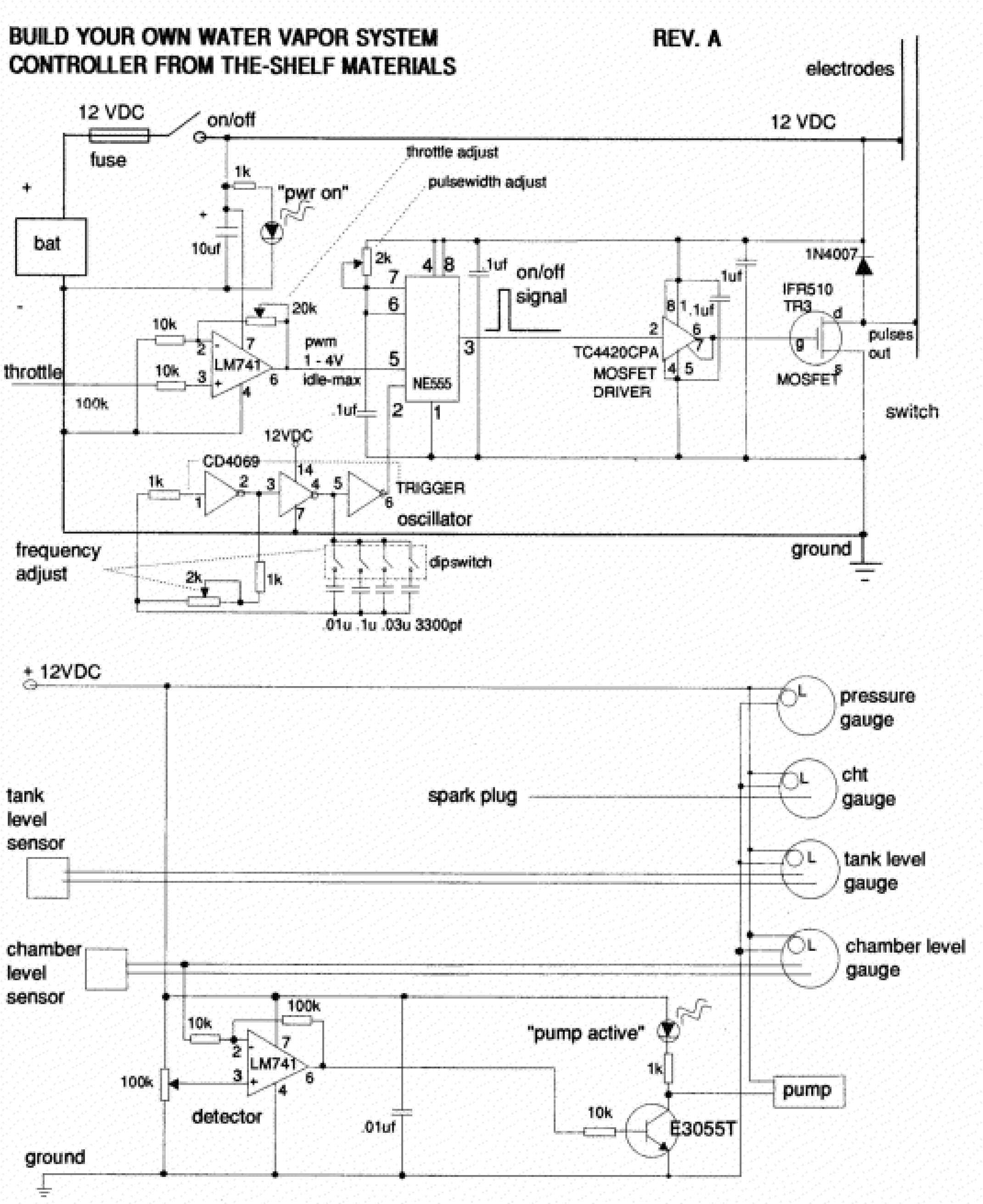

FIGURE 4 E-SCHEMATIC

BUILD YOUR OWN WATER VAPOR SYSTEM CONTROLLER FROM THE-SHELF MATERIALS

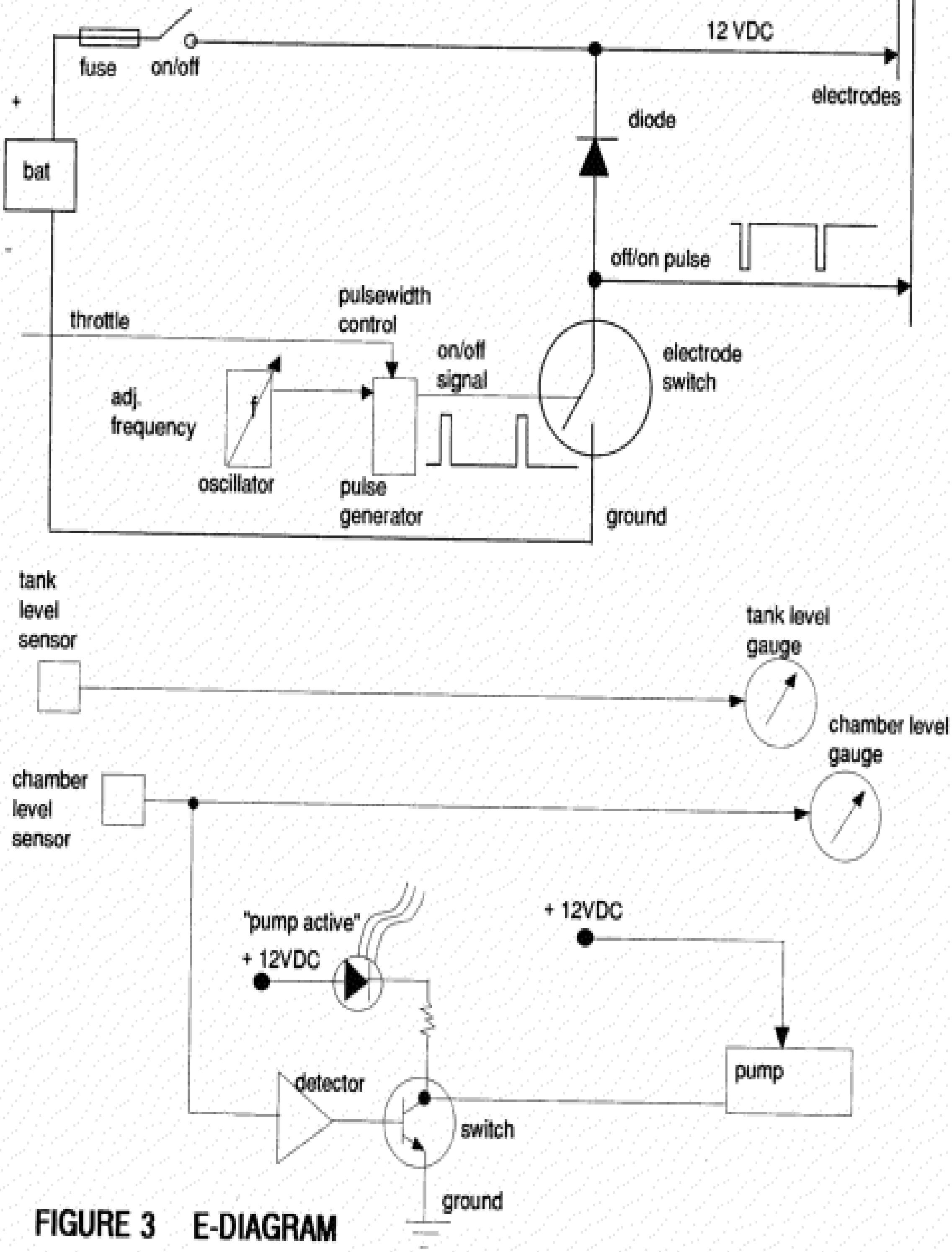

FIGURE 3 E-DIAGRAM

BUILD YOUR OWN WATER VAPOR SYSTEM
CONTROLLER FROM THE-SHELF MATERIALS

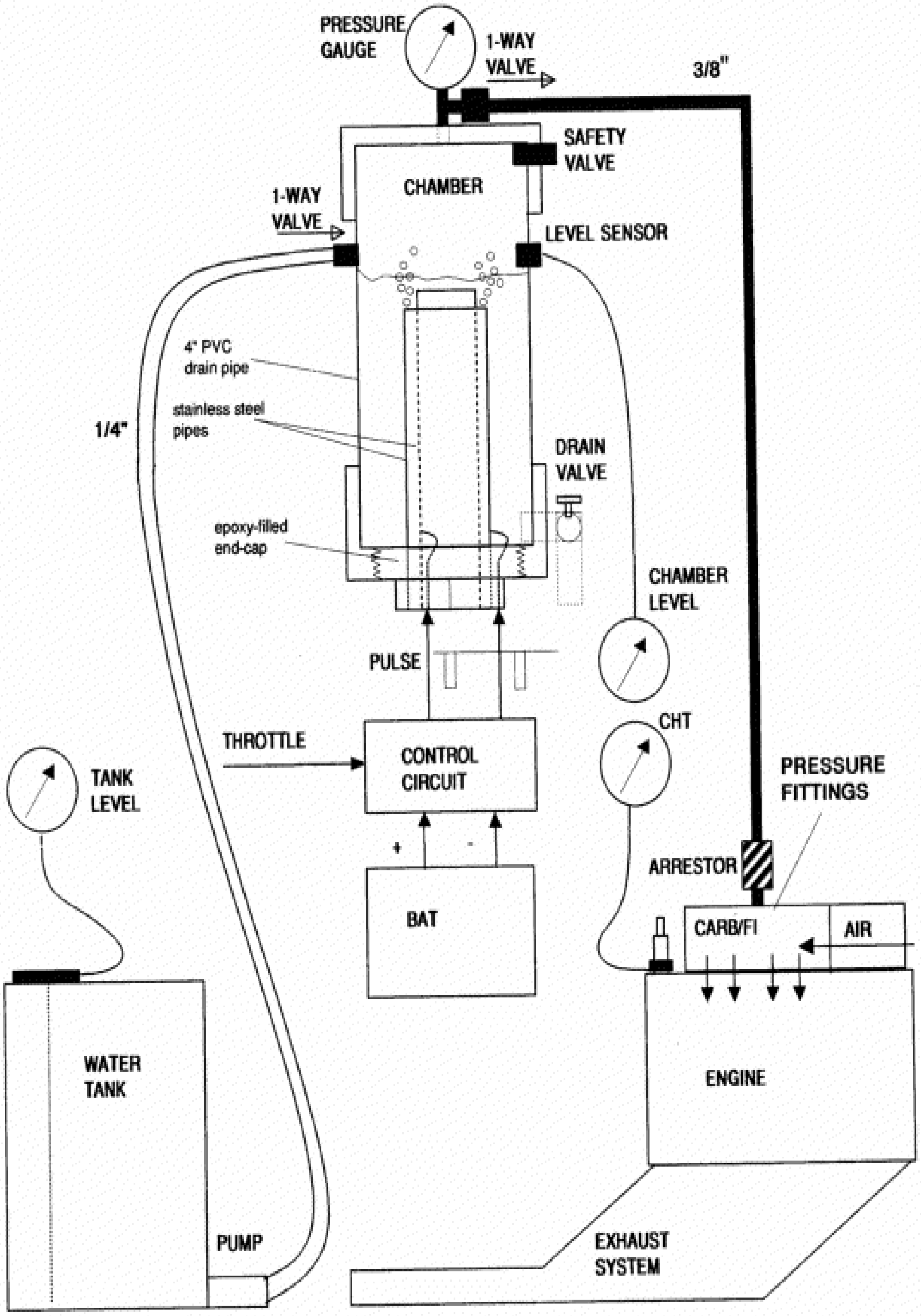

FIGURE 2 BLOC DIAGRAM

CONVERT YOUR ENGINE TO BURN HYDROGEN AND OXYGEN VAPOR FROM WATER....... ON DEMAND + POLLUTION-FREE

FIGURE 1

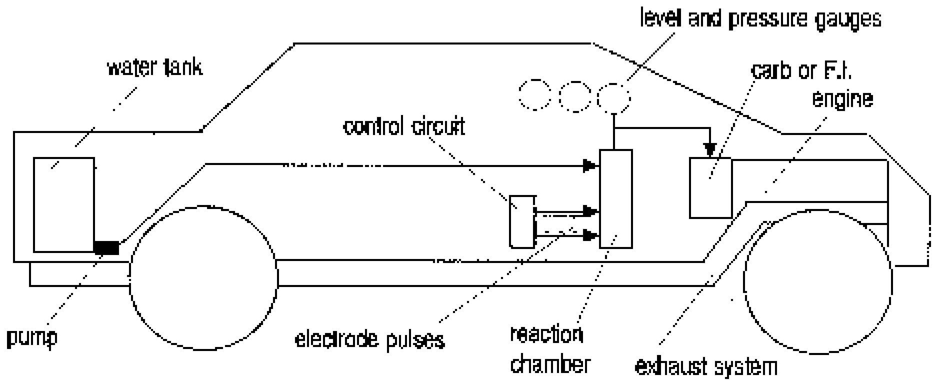

BUILD YOUR OWN WATER VAPOR SYSTEM CONTROLLER FROM THE-SHELF MATERIALS

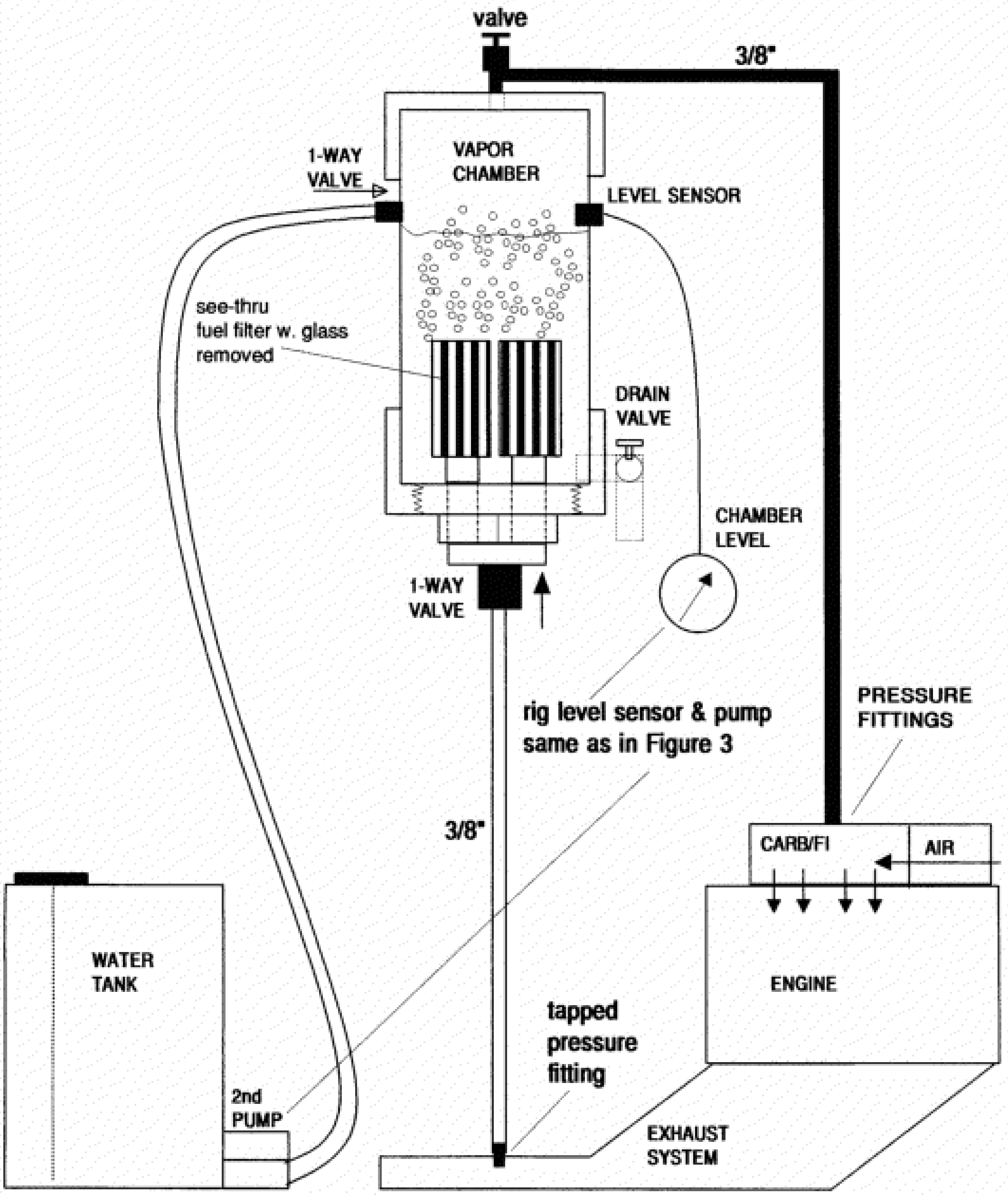

FIGURE 6 OPTIONAL WATER COOLING

3.6.0.1. Der spanische Weg

A Chemical Research group has discovered a new way to extract Hydrogen from water. It is very different from actual methods and is based on the interaction of a Molybdenum (Mo) compound. The complete process has yet to be published, but details were posted today (02/06), it is very promising.

Two scientists at the University of Valencia, Antonio Cervilla and Elisa Llopis, have presented their revolutionary discovery of a method to decompose water into its constituent gases. Other scientists, members of the Institute of Science & Materials at the University of Valencia, and Director Daniel Beltran, have affirmed the discovery of a new invention to obtain hydrogen to generate energy without contaminants.

Dr. Cervilla and Dr. Llopis carried out a diversity of experiments using catalyzers based on molybdenum, a transition? metal. The discovery made the decomposition of water possible, allowing the extraction of energy from the prodigious production of hydrogen.

The explicit discovery came about from an investigation into the decomposition reaction of molybdenum which resulted in a study of the reaction with the possibility of a new means of decomposing water into hydrogen and oxygen.

The results obtained showed it was effectively a catalysis process.

The molybdenum catalyzer dissolves on contact with water to produce a reaction that is transparent/independent of ambient temperature, producing a current of gas which is composed of hydrogen and oxygen.

The enormous importance and potential of this process to produce energy from hydrogen in a controlled combustion cannot be overstated.

Professor Antonio Cervillo, now published over 50 articles in international publications. He is the director of investigations for the CICIT Project.

Professor Elisa Llopis, now age 48, works in the Department of Inorganic Chemistry at the University of Valencia.
"Hydrogen extracted from a half-litre of water can fuel a car from Bilbao to Valencia," or 390 miles, El Pais quoted Cervilla as saying.

3.6.0.2. Verschiedene bestehende Methoden der Energieeinsparung

1. Verfahren zum Abscheiden des spezifisch leichteren Anteils aus einem Strom eines mit suspendierten Partikeln beladenen Mediums mittels Fliehkraft; DE 21 60 415; Erfinder: Ernst-August Bielefeldt; Anmeldetermin: 06.12.71
2. Verfahren und Einrichtung zum Stofftrennen mittels Fliehkraft; Patentschrift DE 28 32 097; Erfinder: Ernst-August Bielefeldt; Anmeldetermin: 21.07.78

3. Verfahren und Vorrichtung zum Trennen von in gasförmigen oder flüssigen Medien dispergierten Teilchen durch Zentrifugalkraft; Patentschrift DE 22 26 514; Erfinder: Ernst-August Bielefeldt; Anmeldetermin: 31.05.72

4. Verfahren und Einrichtung zur Verbesserung der Leistung von Verbrennungsmotoren durch Erzeugung von Nebeltropfen von der Größe 0,1 bis max. 35 µm); Erfinder: Frank Dieter Peschanel; Offenlegungsschrift DE 34 05 899 A1; Anmeldetag: 18.02.1984; In Praktische Versuche ergeben eine Kraftstoffersparnis von 12 bis 18 % und eine Minderung der Stickoxide von absolut 28%."

5. Einrichtung zur Magnetisierung des Brennstoffes eines Verbrennungsmotors; Erfinder: Kapitanov u. a.; Offenlegungsschrift 30 50 645; WO 82/01918; Anmeldetag: 28.11.1980

6. Brennkraftmaschine sowie Verfahren zu deren Betrieb; Erfinder: Wilhelm Häberle; Offenlegungsschrift DE 30 37 200 A1; Anmeldetag: 02.10.1980

7. Magnetic Device for Treading Hydrocarbon Fuels; USA 4,372,852; Inventor: Albert J. Kovacs; Feb. 8, 1983; (Dauermagnet mit Längsbohrung)

8. Zündeinrichtung für Brennkraftmaschinen, Öl- und Gasbrenner u. dgl. Erfinder: Heinz Baur; Patentschrift DE 29 17 617 C2; Anmeldetag: 02.05.1979

9. Vorrichtung zum Verbessern des Wirkungsgrades von Brennkraftmaschinen (durch zuführen von Wasser in das Brennstoff-Luft-Gemisch); Erfinder: Heinz Baur; Offenlegungsschrift 2 313 705; Anmeldetag: 20.03.1973

10. Sparkplug Cap; Inventor: Heinz Baur

11. ; United States Patent 3,683,232; Field: Feb. 3,1970
    Verfahren zur Energiegewinnung aus Wasser mittels Zersetzung in Wasserstoff und Sauerstoff; Erfinder: Werner Lohberg; Offenlegungsschrift 24 52 079; Anmeldetag: 02.11.1974

12. Speisesystem für eine Brennkraftmaschine, der Kraftstoff-Luftgemisch und Wasserdampf zuführbar ist; Erfinder: Werner Lohberg; Auslegeschrift DE 26 04 050; Anmeldetag: 03.02.1976

13. Speisesystem zum Einführen von Wasser und/oder Wasserdampf in den Ansaugweg einer Brennkraftmaschine (um Brennstoff einzusparen); Erfinder: Werner Lohberg; Patentschrift DE 28 43 335¸ Anmeldetag: 04.10.1978

14. Verfahren zur Verbesserung des Verbrennungsprozesses in einer Brennkraftmaschine durch Beimischung von Wasser zum Kraftstoff und Vorrichtung zur Durchführung des Verfahrens; Erfinder: Takeshige Sugimoto, Japan; Offenlegungsschrift 26 32 190; Anmeldetag: 16.07.1976; Bei dem Testfahrzeug handelt es sich um ein 67er

Modell des Typs Nissan Sunny mit einer 1400 ccm-Maschine; Die Testergebnisse ergaben, daß hierbei für eine Distanz von 32 km 1 Liter Benzin verbraucht wurde.

15. Vorrichtung zur Leistungssteigerung von Verbrennungsmotoren (durch Magnetfelder); Erfinder: Thomas K. Verzi, USA; Offenlegungsschrift DE 31 17 015 A1; Anmeldetag: 29.04.1981

16. Vorrichtung zur Verbesserung der Eigenschaften von flüssigen Kraftstoffen für Verbrennungskraftmaschinen; Erfinder: Bergamo Roberto Meli, Italien; Patentschrift 1 037 765; Anmeldetag: 17.10.1956

17. Verneblungsgerät für mit Vergaser arbeitende Verbrennungsmotoren; Erfinder: Walter Henkel; Patentschrift 811 051; Anmeldetag: 15.04.1950

18. Verfahren zum Verbrennen von Kraftstoff in einer Verbrennungskraftmaschine und hierfür vorgesehene Vorrichtung (Kraftstoffersparnis durch Dauermagneten); Erfinder: Koichi Wakuta, Japan; Offenlegungsschrift DE 34 03 797 A1; Anmeldetag: 01.02.1984

19. Verfahren zur Behandlung flüssiger Kohlenwasserstoffbrennstoffe und Vorrichtung zur Durchführung des Verfahrens; (Funktion basiert auf elektrischen Feldern); Erfinder: Roy Collins; Offenlegungsschrift DE 31 33 482; Anmeldetag: 25.08.1981; es wurden in der Praxis Verbesserungen der Kilometerleistung von 20% erreicht;

20. Gasgenerator für einen Verbrennungsmotor; Erfinder: Pier F. Talenti; Patentschrift; DE 28 16 115 C2; Anmeldetag: 14.04.1978

21. Mit Hilfe von Ceriumoxyd und Wasserdampf verbessert eine Firma „GASOX“ die Verbrennung des Treibstoffs. Neben Verhinderung der Entstehung schädlicher Abgase sollen sich auch der Treibstoffverbrauch um 10 bis 15 % reduzieren.

22. An den ROT dargestellten Datum haben Sie gesehen, daß viele Patente infolge der 20 Jahre Frist abgelaufen und diese, und so ich vermute, für jedermann nachbaubar sind!

3.6.0.3. Caggiano; Allen; USP # 5,782,225;

July 21, 1998; Fuel Processor a.s.o. P.O. Box 1273, Plymouth, MA 02362

Es handelt sich hier um ein Patent das schwierig einzuordnen ist, einerseits geht es um einen FUEL PROCESSOR und andererseits um ein EXHAUST GAS HEAT RECOVERY SYSTEM.

HISTORY

Carburetors and fuel injection systems are used to facilitate a combustible mixture of air and fuel for internal combustion engines. Inherently, the fuel in this mixture is mostly droplets. However, it is the vaporous fuel which combined with air gives an explosive mixture; and it is this mixture that can be exploded during the short engine power stroke time available. The rest of the fuel in liquid form simply burns or exhausts to the environment, hence impairing the efficiency of the engine and polluting the environment.

In carburetors the intake air breaksup the liquid fuel into droplets. Together the air and the atomized fuel form the combustion mixture for the internal combustion engines. Unfortunately, there is only the small area around each droplet of liquid fuel that is vaporized leaving the rest still in liquid form when this mixture enters, the engine. It is the vaporous fuel combined with the air, which gives an explosive mixture; and it is this mixture that can be exploded during the short engine power stroke time available.

Die nachfolgenden Verfahren stellen Unikate dar, am besten wird es sein, Sie machen sich selbst ein Bild.

The remaining portion of fuel, still in liquid form, simply burns or exhausts to the environment; hence impairing the efficiency of the engine and polluting the environment.

This situation is more apparent for low speed and low load operations when the intake air velocity is too low to effectively break up the fuel droplets.

The fuel injection systems, employed for some internal combustion engines today, alleviate to some extent by injecting the liquid fuel directly into the intake air stream via a nozzle to produce finer droplets and providing a more precise air/fuel mixture. Unfortunately, even finer droplets remain mostly in liquid form.

Realizing this problem, there were numerous designs for vaporizing the fuel by inventors in the past. However, the problems for making this concept practical had not been fully overcome until the birth of the ALC 2000 FUEL PROCESSOR.

THERE HAVE BEEN MANY ATTEMPTS TO IMPROVE THE VAPORIZATION STATE OF FUEL BY EMPLOYING ULTRASONIC TECHNOLOGY AND ENGINE EXHAUST FOR FUEL VAPORIZATION. Unfortunately, there were many shortcomings and the many problems encountered render it a very costly and impractical way of vaporizing fuel.

The most common design to vaporize the fuel is to provide an exhaust gas heated, engine coolant heated, or electrically heated heat exchanger in between the conventional carburettor, fuel injection system and the intake manifold.

The main disadvantage of this type of design is the overall heating of the intake air. This heating tends to promote detonation; the uncontrollable ignition of the fuel mixture inside the engine cylinder. Another disadvantage is the reduction of the maximum power output of the engine. As the intake air temperature increases, the air mass going into the engine decreases due to physical property that at higher temperatures, the air density is lowered. In effect the maximum power produced by the fuel and air explosion is lessoned.

Some of these designs divert a portion of the intake air and fuel into the heat exchanger. Subsequently, only a portion of the fuel is vaporized, and the majority of the fuel is still in liquid form. In engine coolant heated systems, the temperature of the engine coolant is not high enough for

fuel vaporization. In electrically heated systems, an extra battery or heavy-duty electrical system may be needed for providing electrical power to the heat exchanger, and in general extra engine power is needed to generate this electricity to be effective.
Other attempts involved employing ultrasonic technology to produce finer droplets. Commonly, an ultrasonic transducer, which is made of a piezoelectric crystal is mounted between the conventional carburettor, fuel injection system and the intake manifold. As the air and fuel passes through the ultrasonic transducer, some droplets of fuel come in contact with the ultrasonic transducer. Vibrating at a high frequency, the transducer breaks the fuel into finer droplets. However, these finer droplets remain mostly still in liquid form.

It is also known that air is a poor medium for ultrasonic wave transmission, therefore ultrasonic wave energy is substantially reduced to have little effect on the droplets which are not in immediate contact with this ultrasonic transducer.
Earlier attempts to vaporize fuel usually employed mechanical spray nozzles for fuel atomization with bulky heat exchangers, simple heat exchanger temperature control and fuel metering mechanisms.

One of the main problems encountered in vaporization is gumming. Gumming occurs when high molecular weight components of the fuel, referred to as high ends of the hydrocarbon, cannot vaporize and begin to stick to the heat exchanger surface, in effect lowering the efficiency of the heat exchanger to a stage that renders this approach impractical.

Some designs have heater elements submersed in the fuel for fuel vaporization. Light ends of the hydrocarbon simply boil off and the high ends remain. Obviously, gumming is inevitable in this situation.

The disadvantage of employing mechanical spray for fuel atomization is the production of very coarse fuel droplets. As these droplets contact the heat exchanger’s hot surface, light ends of the hydrocarbon vaporize and cool the hot surface. Subsequently, high ends of the hydrocarbon cannot vaporize and start to accumulate.

The ALC, 2000 Fuel Processor has overcome these shortcomings and has eliminated the problem of very coarse droplets and the cooling of the hot surface of the heat exchanger plates, with the unique design of our high pressure, multi ported, multi nozzle fuel injection bar and the unique design of our dual counter- cross flow heat exchanger, and progressive expansion chambers, with the selection of five different heat transfer surfaces for total temperature control and almost perfect ultra-lean air/ fuel mixture.

Some designs introduce the amount of atomized fuel according to the engine demands; controlled by the engine vacuum or activated by the throttle position. Some designs simply rely on the intake air to meter the atomized fuel like the conventional carburetor does. Some designs atomize fuel independent of the engine’s demand.

These type of designs cannot satisfy transient requirements such as load variation or deceleration or acceleration because of the lag effects related to fuel reaching the engine from its point of injection.

Some of these designs are unsafe and very dangerous, prone to fire and explosions.

The ALC 2000 Fuel Processor has overcome these short comings by eliminating these problems with our unique design which produces no more vaporized fuel than the engine will need under full load conditions within the next 5 to 15 seconds, just inches from the combustion chambers of the engine.

Vaporization of fuel requires abundant heat. Commonly heat from the engine exhaust is used for this purpose because this heat is the waste by-product from the consumed fuel. Most of the previous designs cannot make use of large amounts of engine exhaust because the engine exhaust is too hot to be injected into the heat exchanger without the risk of igniting the fuel and sometimes causing explosions.

Realizing this difficulty, some designs divert only a portion of the engine exhaust into the heat exchanger. Unfortunately, the heat obtained from this portion of the exhaust is not adequate for thorough fuel vaporization. In addition, this the exhaust gas flow is relatively slow, which is considered to be laminar flow inside the heat exchanger. It is well known that laminar flow yields poor heat transfer efficiency. In most cases, a large heat exchanger is required for thorough fuel vaporization.

Depending on the design, the diversion of the exhaust gas sometimes creates high engine exhaust backpressure. This high exhaust backpressure affects the efficiency of the engine. As the exhaust valve of the engine opens, it is desirable to expel the exhaust gas out of the cylinder as freely as possible. However, if the passage of the exhaust is obstructed to divert the exhaust gas into the heat exchanger, then extra engine power would be needed to push the exhaust gas out of the engine cylinder.

Another problem associated with making the vaporization of fuel practical is the control of the heat exchanger temperature. The temperature of the engine exhaust varies with different operating conditions of the engine. In particular, the temperature control is fairly demanding during transient situations such as load variations, acceleration and deceleration.

The temperature of the engine exhaust is high enough to ignite the fuel, therefore as more engine exhaust is diverted into the heat exchanger, more demands are placed on the temperature control mechanism. In addition, as the fuel vaporizes, the heat exchanger requires more heat; and highly vaporized fuel is highly explosive, which ensures a thermodynamic advantage when this mixture is ignited inside the engine cylinder.

Therefore, effective and practical means have to be provided to totally control the temperature of the heat exchanger in response to the incoming engine exhaust gas and the effect of the fuel vaporization in order to be practical and effective.

We have overcome all of the problems, shortcomings, and failures of the above other inventions with our EXHAUST GAS TOTAL HEAT RECOVERY SYSTEM, with unique features of air to air and liquid to air heat transfer and total temperature control under all engine load and temperature conditions.

Another approach is a standalone fluid vaporizing processing system which this invention is based on; the ALC 2000 FUEL PROCESSOR conditions and processes fuel and maintains a minimum rate of 98% FUEL VAPORIZATION under all engine load and temperature conditions. The ALC 2000 Fuel processor delivers to the combustion chambers of the internal combustion engine at the precise instant of ignition, a minimum of 98% vaporized fuel, with an almost perfect ultra-lean air/fuel mixture; resulting in over 100 miles per gallon and almost no detectable levels of pollutants.

This was accomplished with the 5-module design of the ALC 2000 FUEL PROCESSOR, which has overcome all of the foregoing mentioned problems, shortcomings and failures of other inventors and their inventions.

1.) Multi nozzle high-pressure fuel injection bar.
2.) Multi ported ram air induction bar with a high-volume air pump.
3.) Dual counter-cross flow heat exchanger, with 5 different type heat transfer surfaces and progressive expansion chambers.
4.) Unique array of liquid and air metering, flow, temperature controls and devices
5.) Unique exhaust gas total heat recovery system with Total air to air and liquid to air heat transfer and total temperature control.

1.) HIGH PRESSURE FUEL INJECTION BAR.
As shown in patent drawing Fig 19 and Shop drawings page 8, parts 17-20 Fuel Bar Assembly 100; which is a multi-nozzle, multi ported fuel injection bar with pressure ranges from 0 to 250 psi. Both pressure and atomizing nozzles are individually designed and sized to meet the requirements of different size engines and variable load, temperature and safety conditions. The Fuel Bar Rod 106 is spring-loaded and rotates clockwise and counterclockwise, it acts somewhat like an accelerator and deceleration device. As shown in patent drawing page 12 the top outer plate 60 and the cover sheet from the Shop drawings; The high pressure fuel bar assembly 100 is mounted on the inside of plate 60; Where it produces on demand ultra-fine atomized fuel droplets to be vaporized to its maximum state of vapour as follows.

2.) RAM AIR INDUCTION BAR.
As shown in shop drawing page 7 which is the replacement for patent drawing Fig 8-11, left side plate 50; Hot fresh air from the Exhaust Gas Heat Recovery System, shop drawing Fig 20, page 9A enters the top plate 7. The f low of the fresh hot air is controlled by balancing flow dampers Parts 12 and 13, which are set to let just enough hot air through to act as a carrier for the atomizing ultra-fine droplets of fuel, that are produced by the High Pressure Fuel Bar Assembly 100; This helps prevent pre ignition and unwanted explosions outside the combustion chamber of the cylinders of the engine. As shown in the Shop Drawings page 9, Which is a ram air induction pump part 21, which sucks fresh clean hot air into the multi ram air ports shown on the bottom of plate 7, air flow is regulated by a spring loaded multi ported ram air induction bar part 12; The air is then rammed into the bottom vaporization chamber of the fuel processor, where the precise temperature of air and vaporized fuel are blended to an almost perfect ultra-lean highly explosive air/fuel mixture.

3.) DUAL COUNTER-CROSS FLOW HEAT EXCHANGER:

Which is fully explained in the patent description; Nevertheless the following are a few highlights; When the high pressure fuel bar assembly sprays ultra-fine atomized- fuel droplets on the top vaporizing chamber plate, low end hydrocarbon vaporize, instead of the plate cooling it gets progressively hotter and vaporize the high end hydrocarbons and other chemicals used in today's gasoline, which all have different vaporization temperatures, that's why progressive temperature vaporization is absolutely necessary and successful.

5 DIFFERENT HEAT TRANSFER SURFACES: PAGE AA of the Shop Drawings show 5 different heat transfer surfaces for different rates and percentages of heat transfer; FLAT SURFACE plate 1. DOMED SURFACE plate 2. DOME-FINNED SURFACE plate 3. STRAIGHT-FINNED SURFACE plate 4. SLANT-FINNED SURFACE plate 5

4.) TEMPERATURE, LIQUID and AIR FLOW CONTROL.

All are shown and explained. in Fig 3a and 3b of the patent drawings and patent description, as well as on Shop Drawing page B.

5.) EXHAUST GAS HEAT RECOVERY SYSTEM

The Exhaust Gas Heat Recovery System is an alternate, with superior performance to the exhaust Heat Recovery system shown on page b and Page 9, part -22 of the shop drawings.
Most other inventions that used engine exhaust heat, suffered many shortcomings; whereas most previous designs cannot make use of large amounts of engine exhaust hot gas, because the engine exhaust is too hot to be injected in large quantity into the heat exchanger or combustion chamber, without the high risk of pre igniting the fuel. Others have diverted a portion of the engine exhaust into the heat exchanger or combustion chamber. Unfortunately heat obtained from a portion of the engine exhaust cannot provide a constant stable temperature under all engine loads and conditions. Others have suffered from laminar flow which yields poor heat transfer. Others have suffered from high exhaust back pressure., with a drastic reduction in engine efficiency.
Building Instructions

This section will be updated and expanded continuously based on the questions and feedback received from people building Fuel Implosion Vaporization Systems for their respective vehicles.

Material Main Unit:

IMPORTANT NOTE:

The main unit of the ALC2000 Fuel processor is constructed of 70-75-T6 Aluminium. Do NOT use ANY other grade or type of aluminium unless you want to SERIOUSLY compromise the results you will get when running the unit.

Exhaust Gas Heat Recovery System: It is recommended to build this part of the system from Stainless Steel

ALC. 2000

FUEL PROCESSING CARBURATION SYSTEM

SHOP DRAWINGS

ALLEN CAGGIANO OCT 1994

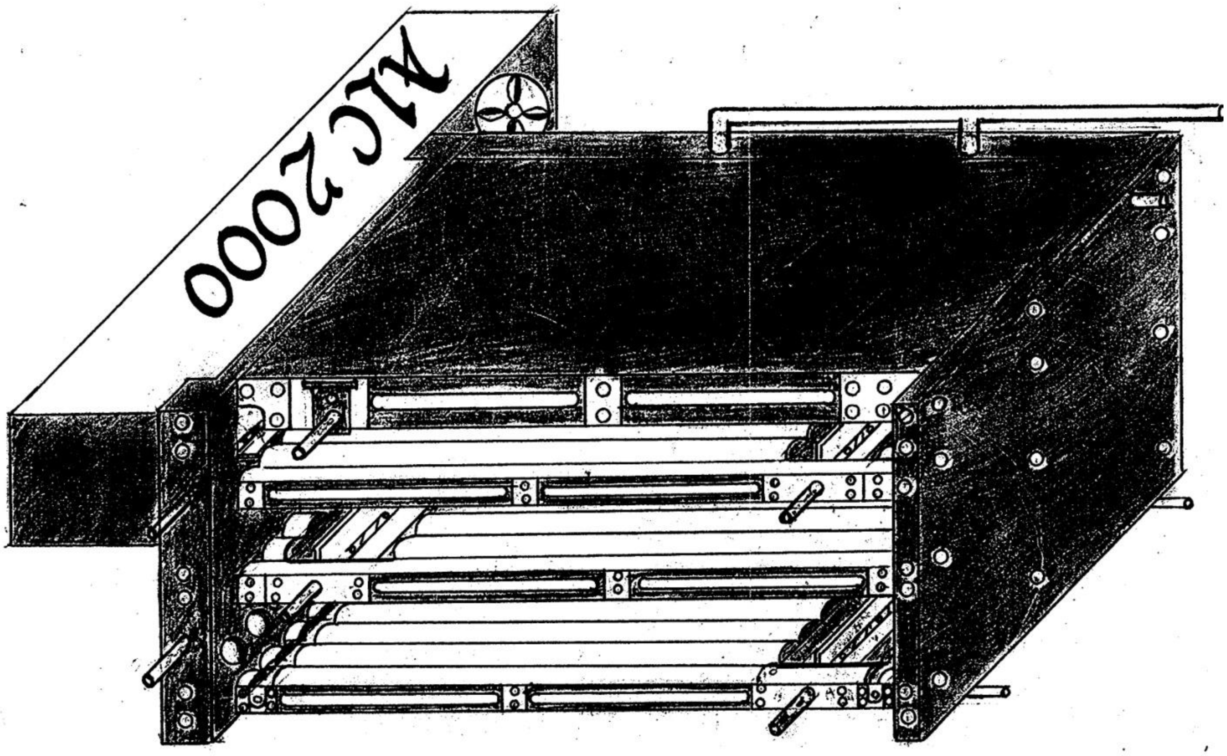

PART 21.

PLATES-1,2,3,4,5,6,7,8

ITINDIAN INTERNATIONAL TEC
ALC. 2000
FUEL PROCESSING CARBURATION SYSTEM
SHOP DRAWINGS
ALLEN CAGGIANO OCT 1994

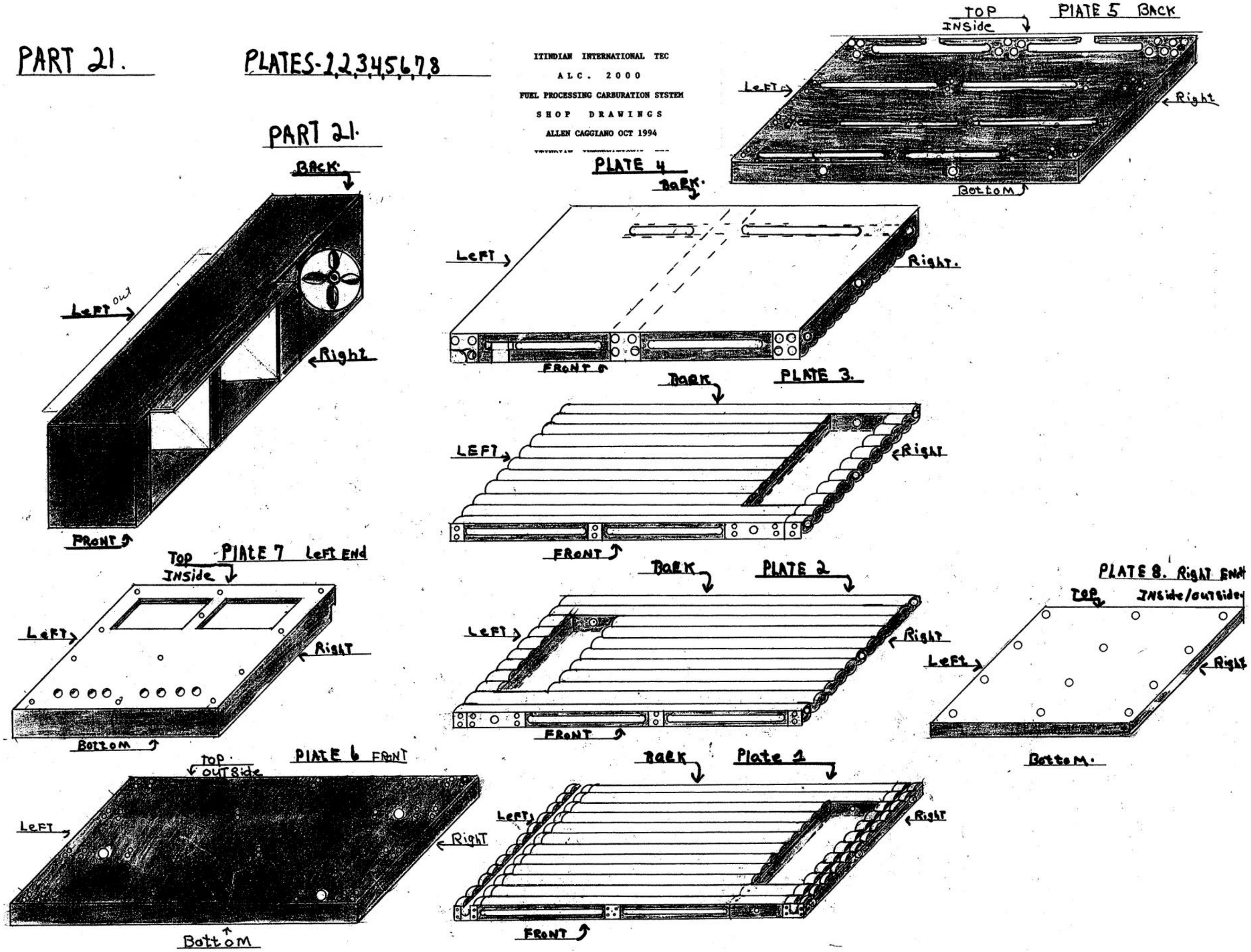

ITINDIAN INTERNATIONAL TEC
A L C . 2 0 0 0
FUEL PROCESSING CARBURATION SYSTEM
S H O P D R A W I N G S
ALLEN CAGGIANO OCT 1994

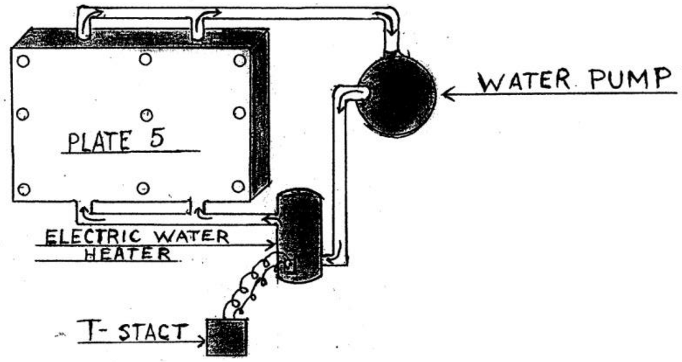

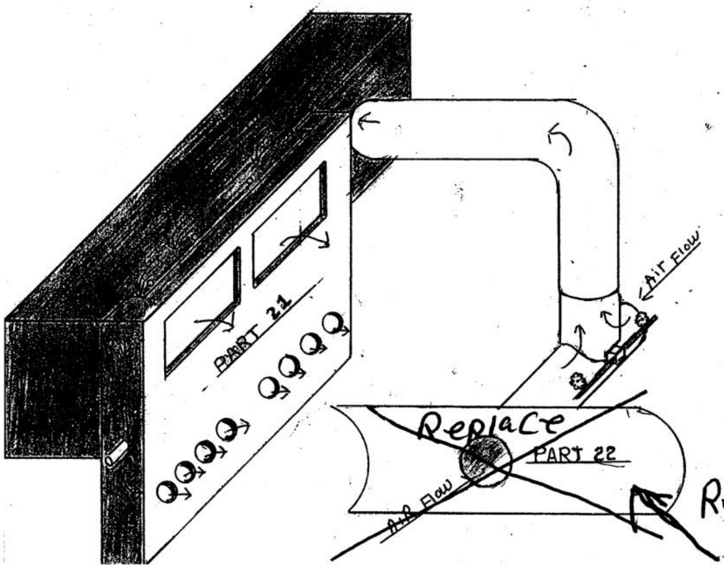

Replace with E.G.H.R.S.

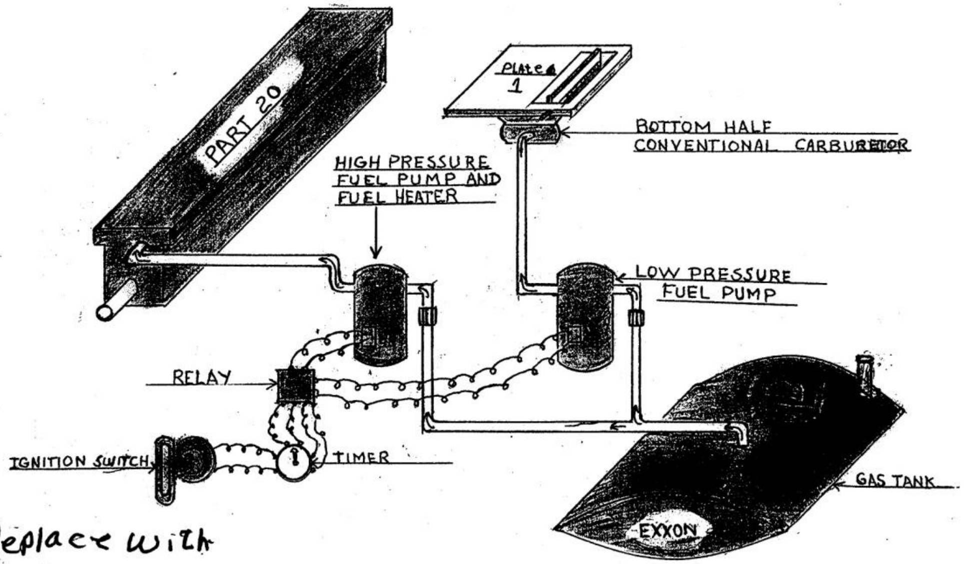

YTINDIAN INTERNATIONAL TEC
A L C . 2 0 0 0
FUEL PROCESSING CARBURATION SYSTEM
S H O P D R A W I N G S
ALLEN CAGGIANO OCT 1994

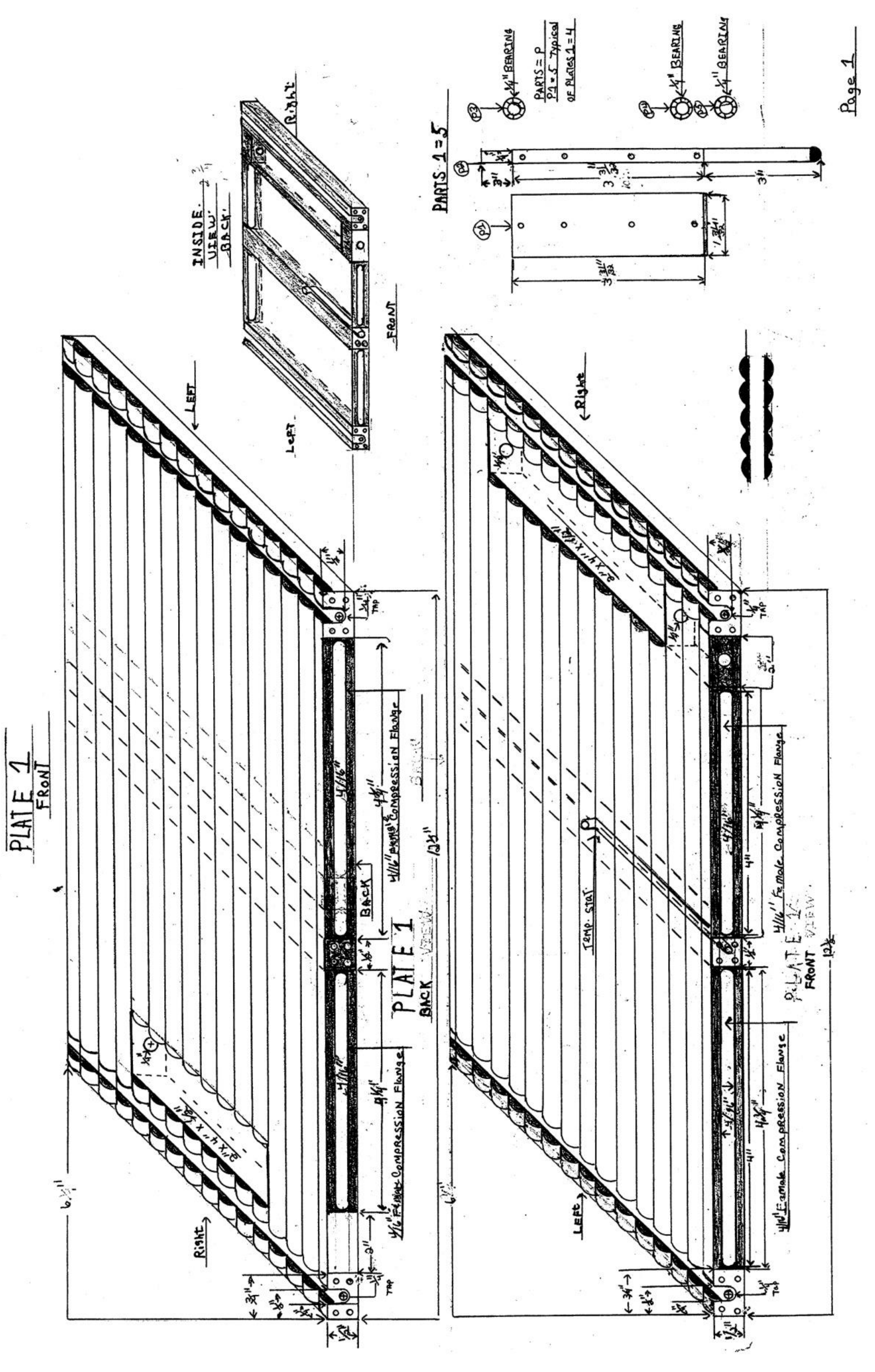

ITINDIAN INTERNATIONAL TEC

ALC. 2000

FUEL PROCESSING CARBURATION SYSTEM

SHOP DRAWINGS

ALLEN CAGGIANO OCT 1994

PLATE 2

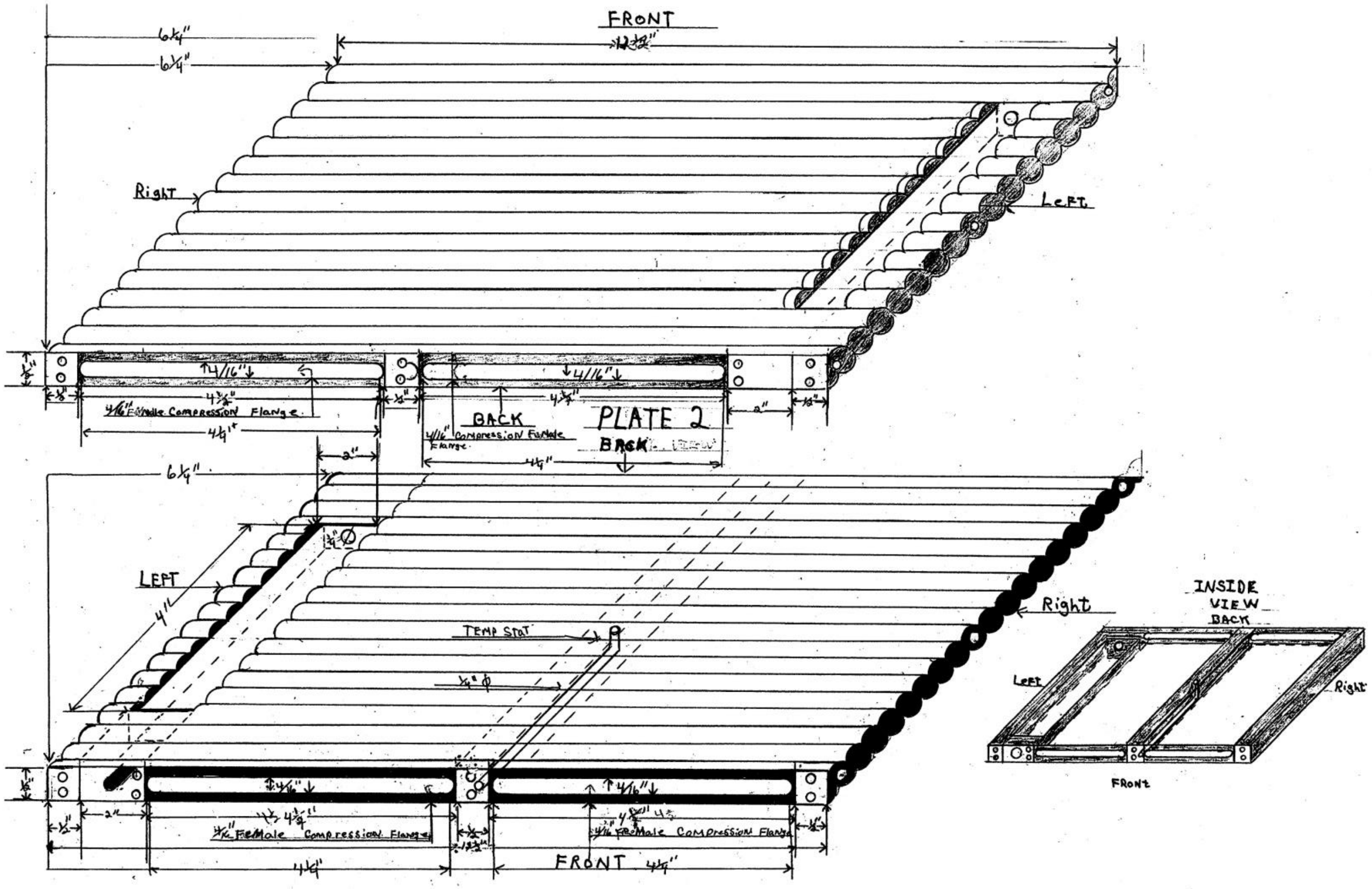

Page 2

ITINDIAN INTERNATIONAL TEC
ALC. 2000
FUEL PROCESSING CARBURATION SYSTEM
SHOP DRAWINGS
ALLEN CAGGIANO OCT 1994

PLATE 3

FRONT

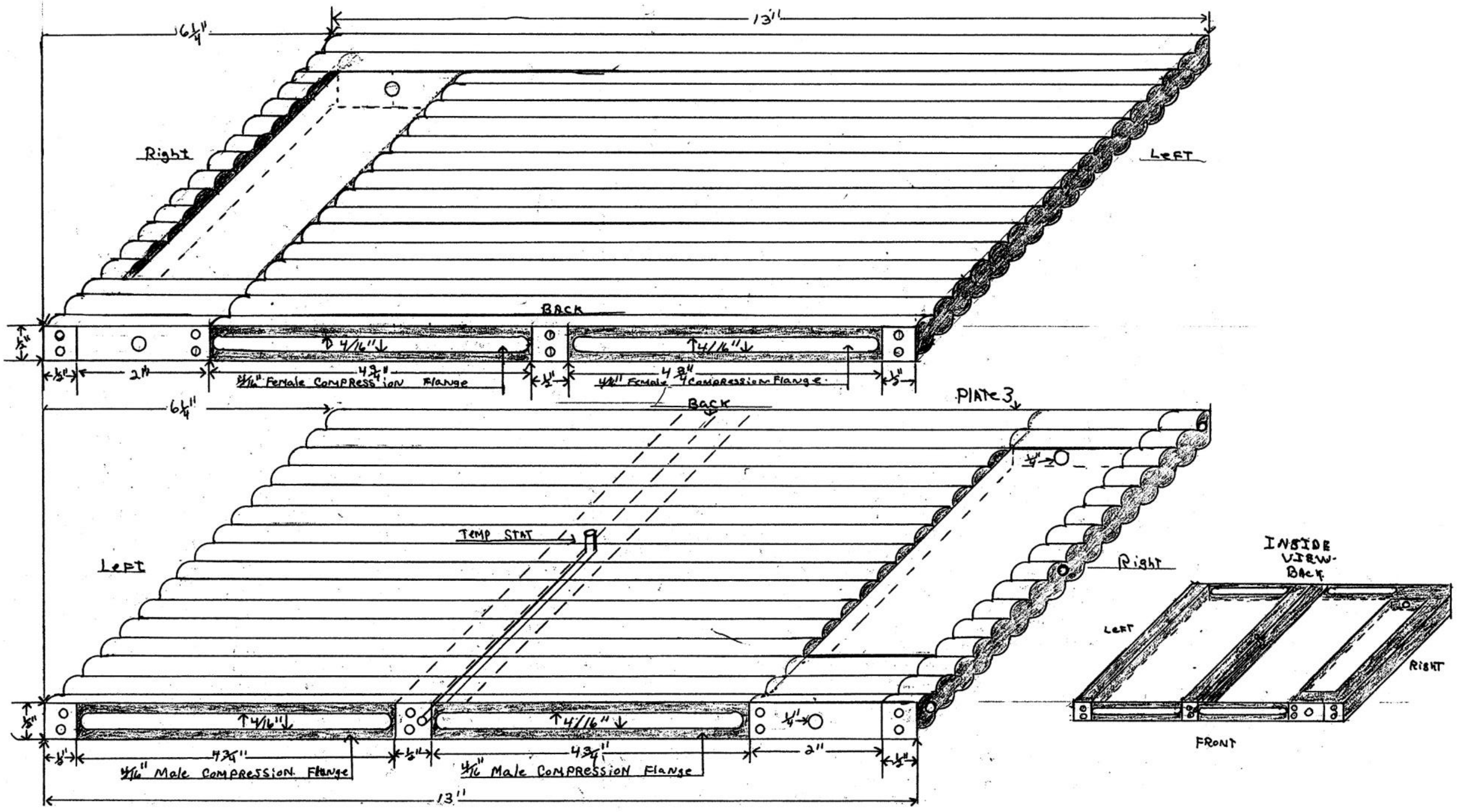

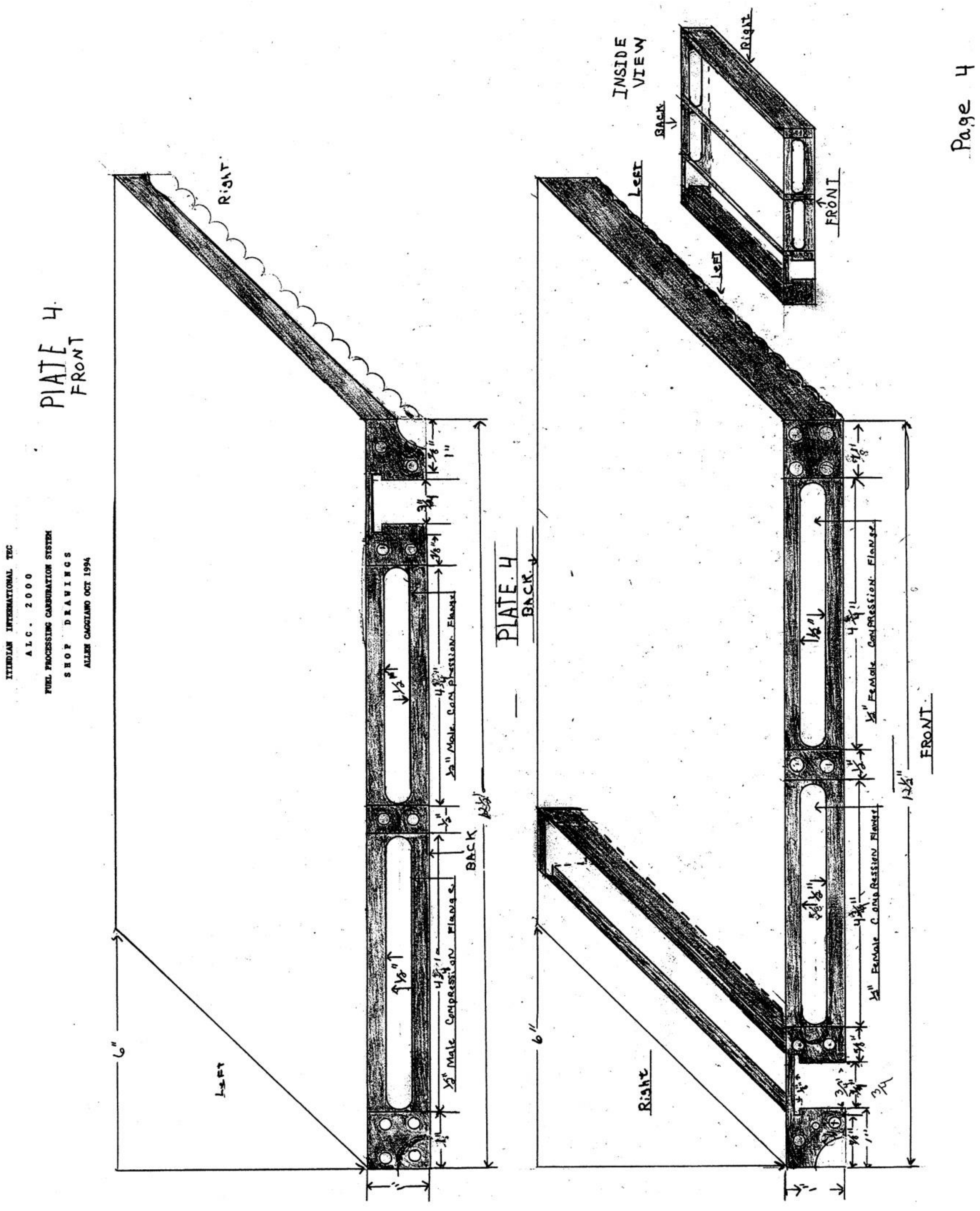
ITINDIAN INTERNATIONAL TEC
ALC. 2000
FUEL PROCESSING CARBURATION SYSTEM
SHOP DRAWINGS
ALLEN CAGGIANO OCT 1994
PIATE 4
FRONT
PIATE 4
BACK
INSIDE VIEW
Page 4
Right
Left
BACK
FRONT
6"
1"
12½"
½" Male Compression Flange
½" Female Compression Flange
4⅜"
1⅛"
3/4

ITINDIAN INTERNATIONAL TEC
A L C . 2 0 0 0
FUEL PROCESSING CARBURATION SYSTEM
S H O P D R A W I N G S
ALLEN CAGGIANO OCT 1994

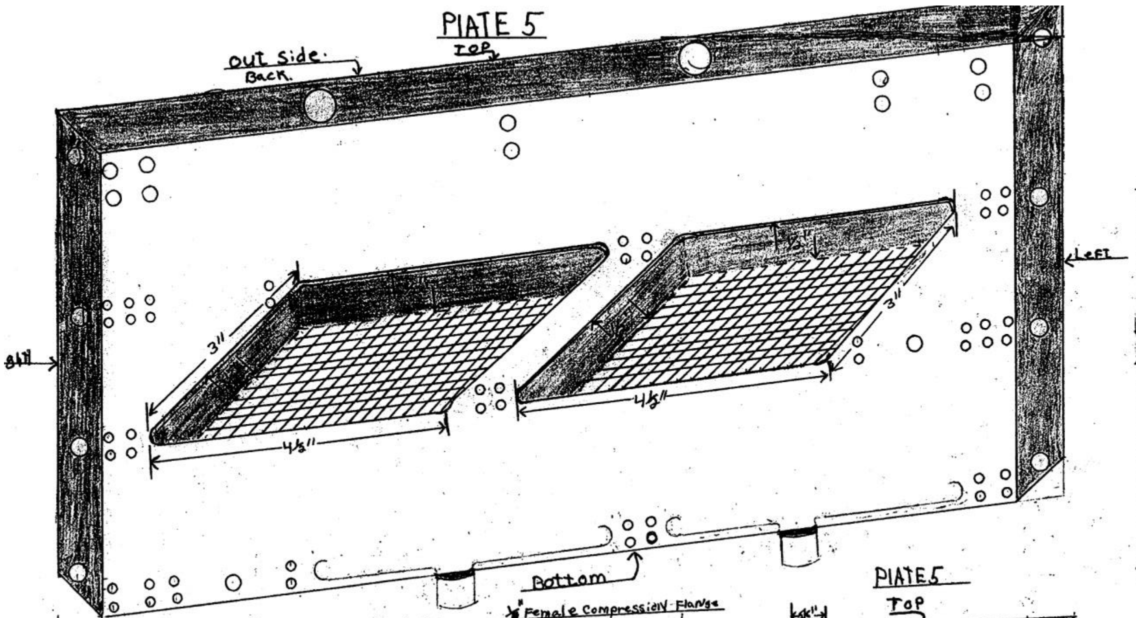

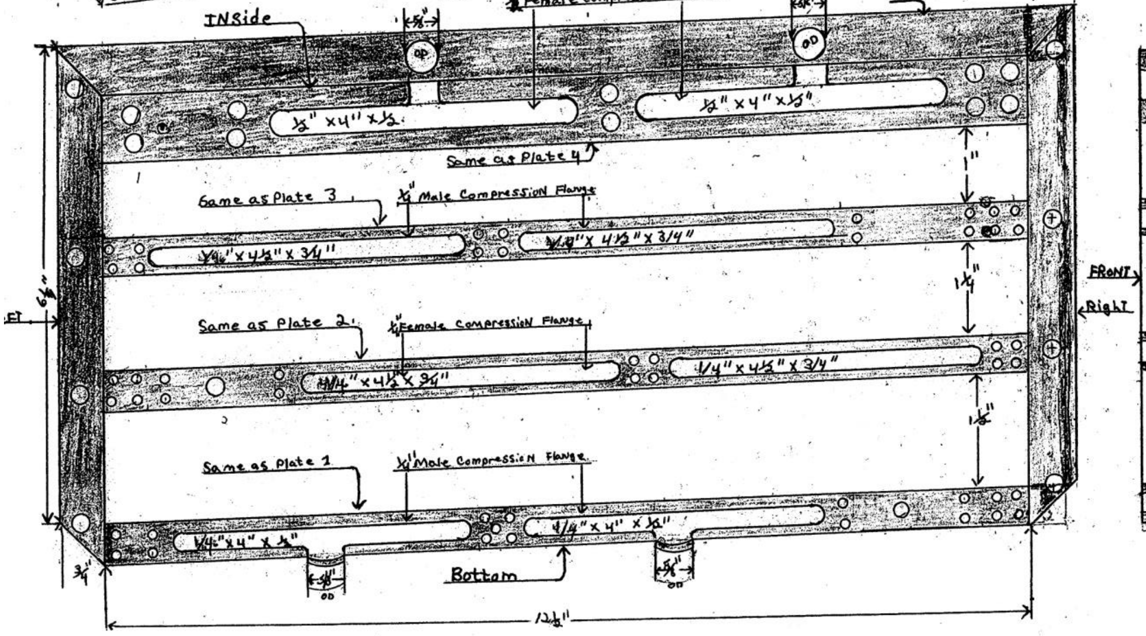

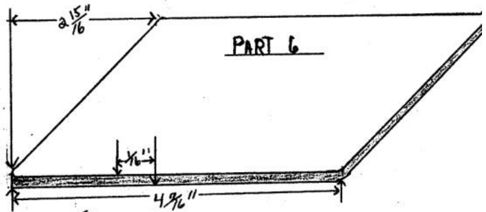

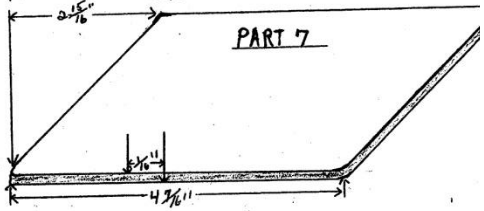

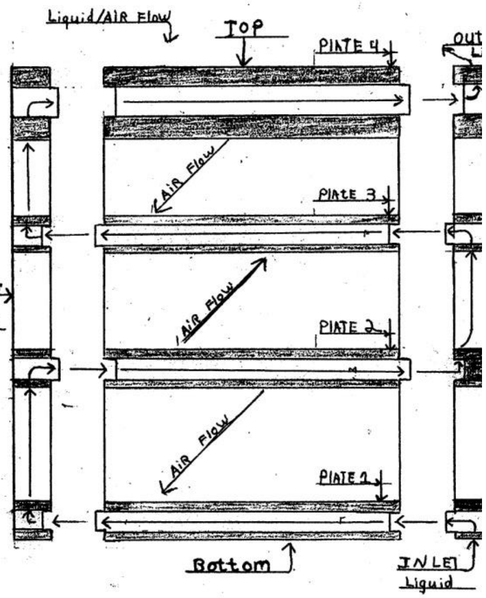

ITINDIAN INTERNATIONAL TEC
A L C . 2 0 0 0
FUEL PROCESSING CARBURATION SYSTEM
S H O P D R A W I N G S
ALLEN CAGGIANO OCT 1994

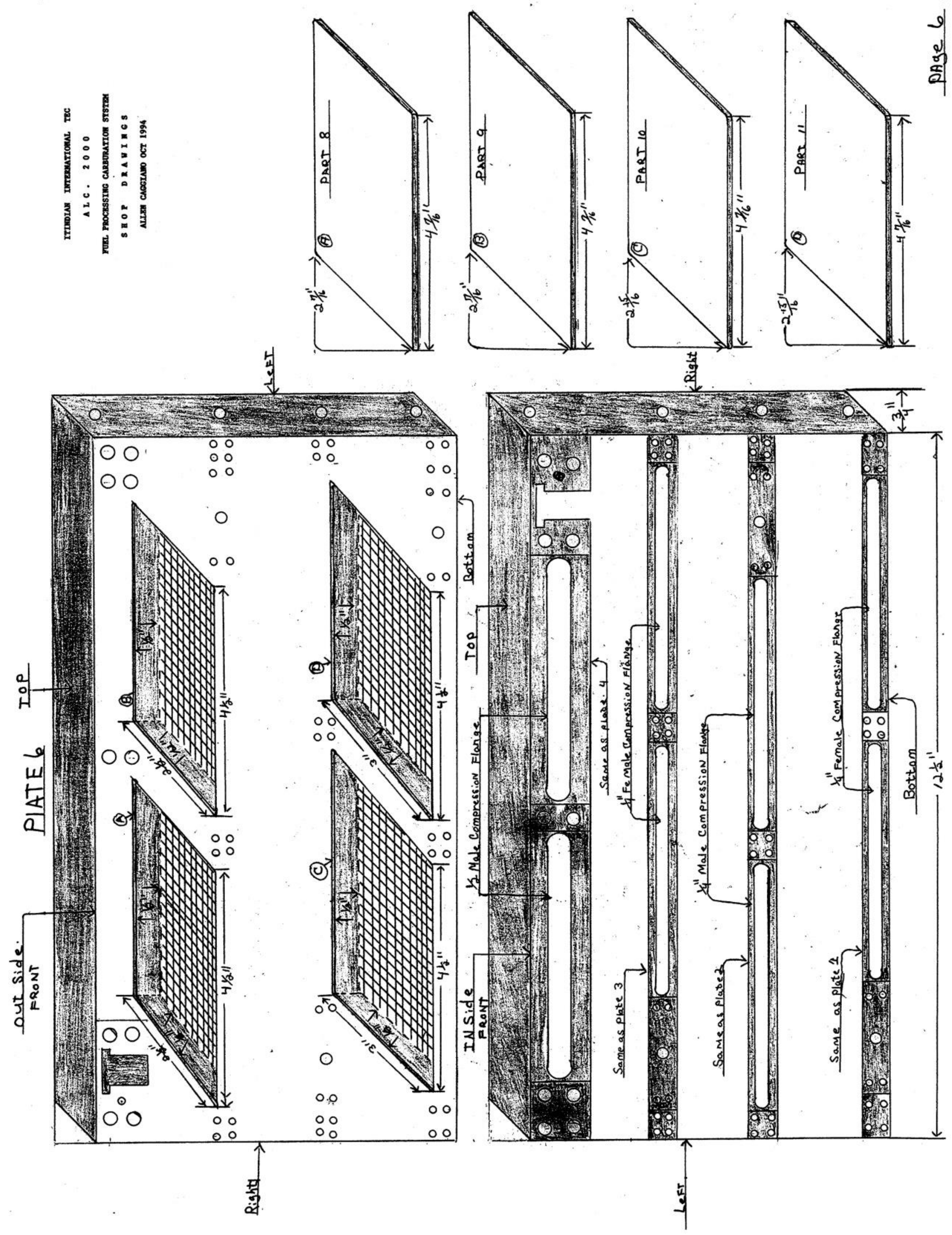

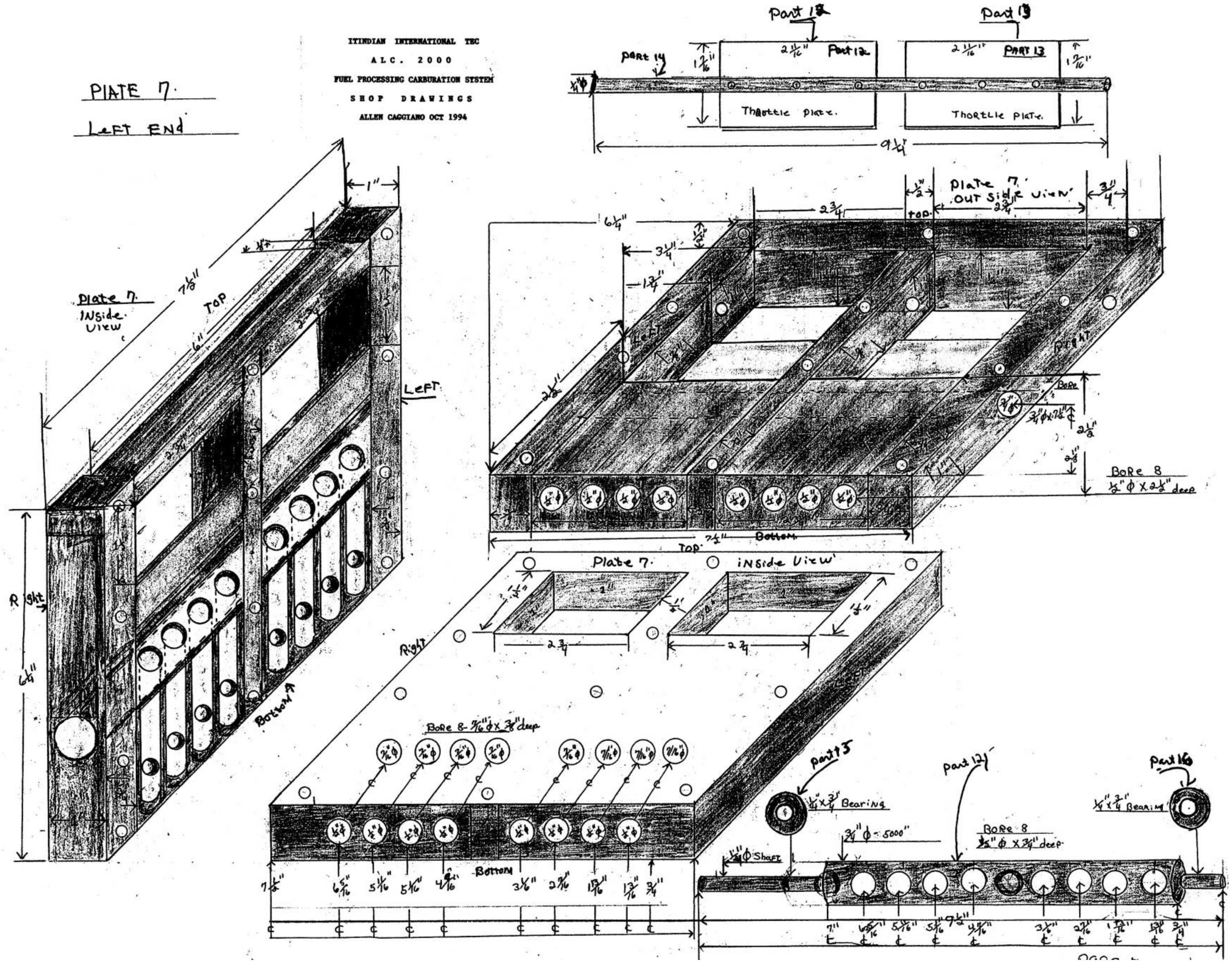

ITINDIAN INTERNATIONAL TEC
ALC. 2000
FUEL PROCESSING CARBURATION SYSTEM
SHOP DRAWINGS
ALLEN CAGGIANO OCT 1994

PlATe 8

ITINDIAN INTERNATIONAL TEC
ALC. 2000
FUEL PROCESSING CARBURATION SYSTEM
SHOP DRAWINGS
ALLEN CAGGIANO OCT 1994

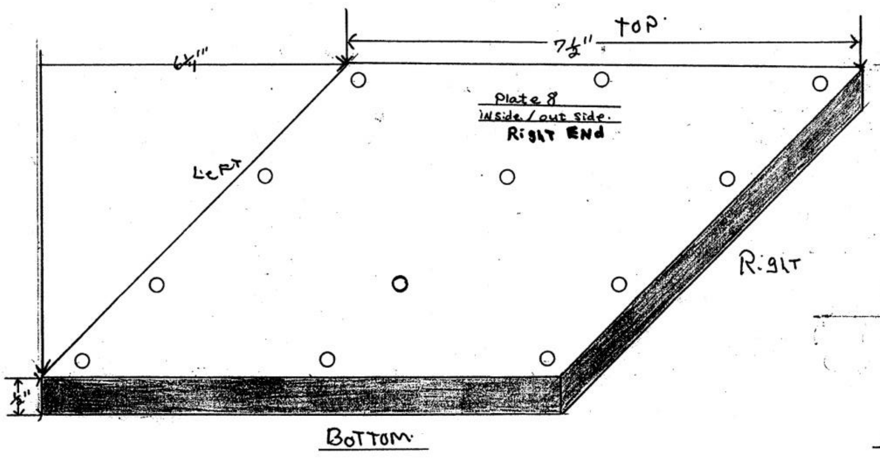

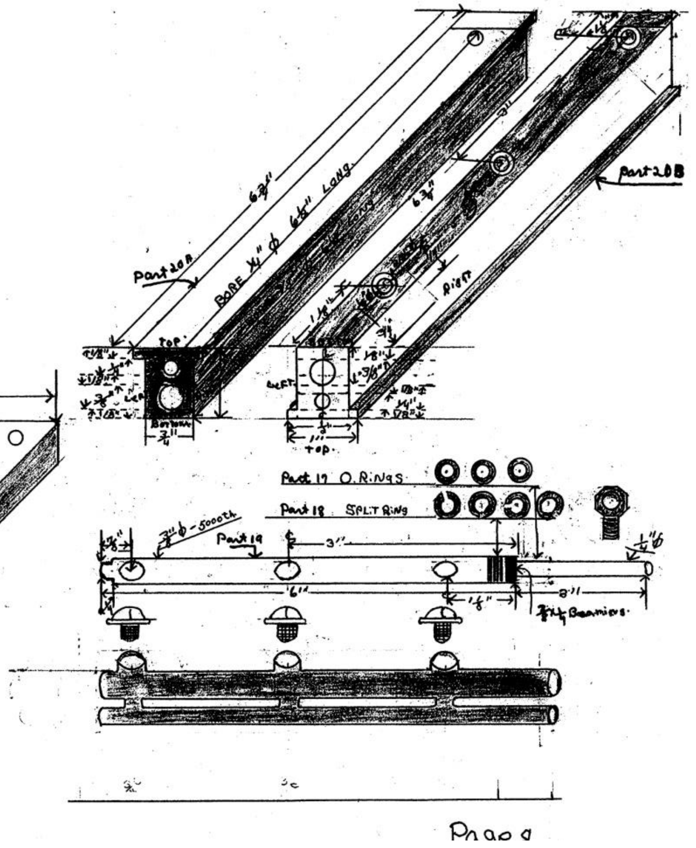

PARTS 21 & 22.

ITINDIAN INTERNATIONAL TEC
A L C . 2 0 0 0
FUEL PROCESSING CARBURATION SYSTEM
S H O P D R A W I N G S
ALLEN CAGGIANO OCT 1994

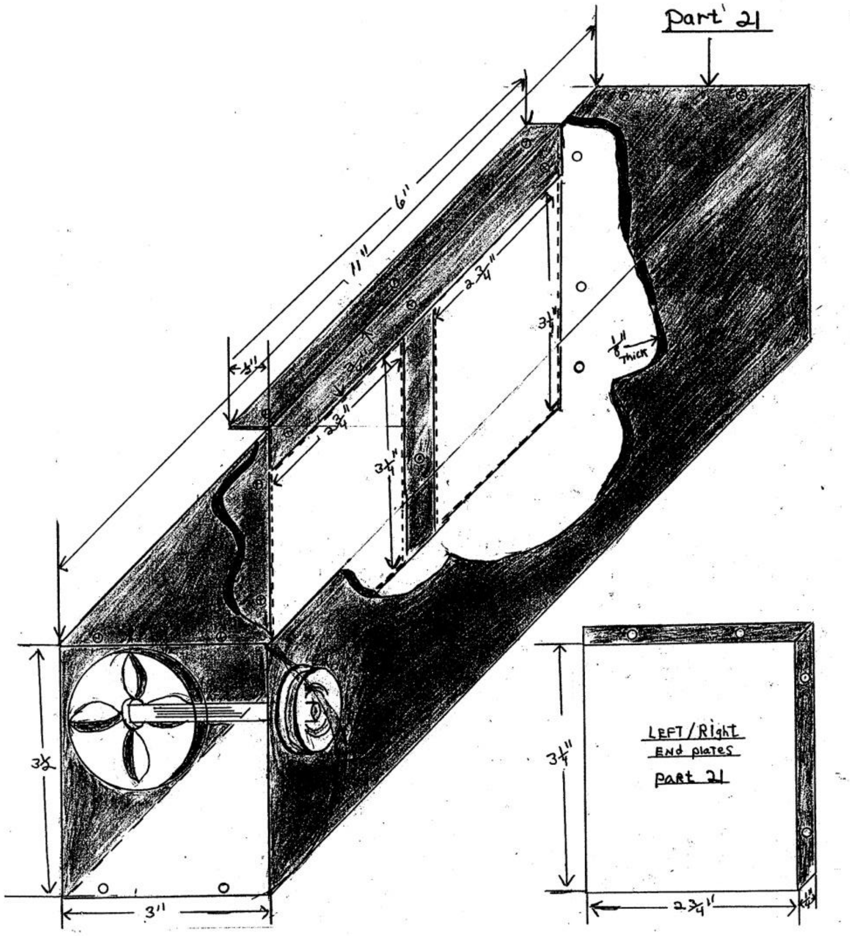

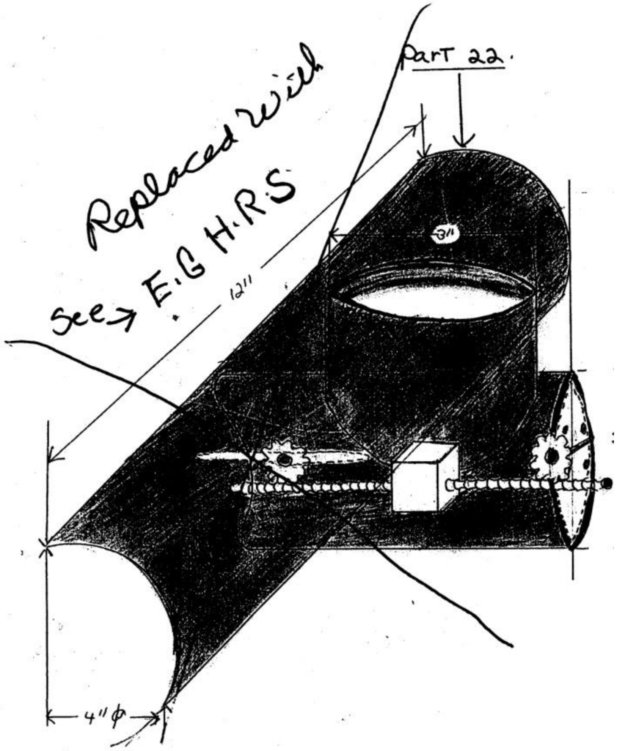

Replaced with
See → E.G H.R.S

Page9

EXHAUST GAS HEAT RECOVERY SYSTEM

The Exhaust Gas Heat Recovery System is an alternate, with superior performance to the exhaust heat recovery system shown on page B and page 9, part 22 of the shop drawings.
Most other inventions that used engine exhaust heat, suffered many shortcomings. Whereas most previous designs cannot make use of large amounts of engine exhaust hot gas because the engine exhaust is too hot to be injected in large quantity into the heat exchanger or combustion chamber, without the high risk of pre igniting the fuel. Others have diverted a portion of the engine exhaust into the heat exchanger or combustion chamber. Unfortunately heat obtained from a portion of the engine exhaust cannot provide a constant stable temperature under all engine loads and conditions. Others have suffered from laminar flow, which yields poor heat transfer. Others have suffered from high exhaust back pressure, with a drastic reduction in engine efficiency.

DESCRIPTION OF INVENTION

Our Exhaust Gas Heat Recovery System has overcome the above failures and shortcomings of other inventions.

Fig.20 Hot engine exhaust enters middle inlet 1; when engine is cold the exhaust flow regulator is closed 2 engine exhaust is diverted to the left side inlet 6 and the right-side inlet 7. The servomotor 10 regulates engine exhaust flow through the exhaust gas flow regulator 8; through the heat exchanger 11; and through heat exchanger plates 1, 2, 3, 4, 5, and 6, which is shown in figs 25 and 26. Fig 20. Engine exhaust then flows into the right-side outlet 12, which flows into the middle outlet 5, which exhaust through the conventional muffler.

Fig. 20 Hot engine exhaust enters left side inlet 6. Servomotor 18 regulates engine exhaust flow through exhaust gas flow regulator 16. Then through heat exchanger plates 1, 2, 3, 4, 5 and 6, which is shown in figs 25 and 26. Engine exhaust then flows into the middle outlet 5, which exhausts into the conventional muffler.

Figs. 20 and 24 Coolant source enters the coolant inlet 22; then travels through the left side of the heat exchanger 19. Best shown in Figs 21, 22, 23 and 24 the coolant flow across the strait finned plates 7, 8, 9, 10 and 11; extracting heat from the engine exhaust plates 1, 2, 3, 4, 5 and 6; Hot coolant then flows through coolant outlet 23; Then flows to the hot coolant inlet 28a and 28b which is best shown in fig 4.

Fig 20

Fresh air source enters the intake fresh air inlet 14; through the left side of the heat exchanger 11;

As best shown, in Figs 21, 22, 23 and 24 The fresh air flows across the straight finned plates 7, 8, 9, 10 and 11; Extracting heat from the engine exhaust plates 1, 2, 3, 4, 5 and 6; Then hot air flows through the discharge fresh hot air outlet 15; which is best shown on page A of the shop drawings, part 21 which is the inlet of the high output fan.

NOTE
As seen from above both the heat exchangers can be made from the same plates to produce air to air or liquid to air heat transfer. Also, the heat exchangers can be milled, machined, extruded or die cast, in aluminium, steel iron, stainless steel and of most other metals, ideally stainless steel is preferred.

As best shown in Fig 20 the engine exhaust can flow straight through the muffler or can be diverted to the left side liquid to air heat exchanger, which produces hot coolant and at the same time it can be diverted to the right side air to air heat exchanger which produces fresh hot air. Servomotors 4, 10 and 18 are controlled with thermostats located in the vaporizing chambers of the Fluid vaporizing System; which control the exhaust gas flow regulators 2,8 and 16; which give total control of both the coolant and the hot fresh air.

NOTE
The catalytic converter is a chemical filter connected to the exhaust system of an automotive vehicle so as to reduce air pollution, whereas our Fluid Vaporizing System reduces air pollution to almost un measurable levels, which renders the catalytic converter and most other pollution devices useless, therefore our Exhaust Gas Heat Recovery System can be installed in the space the catalytic converter once occupied, not to mention the large savings in the cost of the catalytic converter.

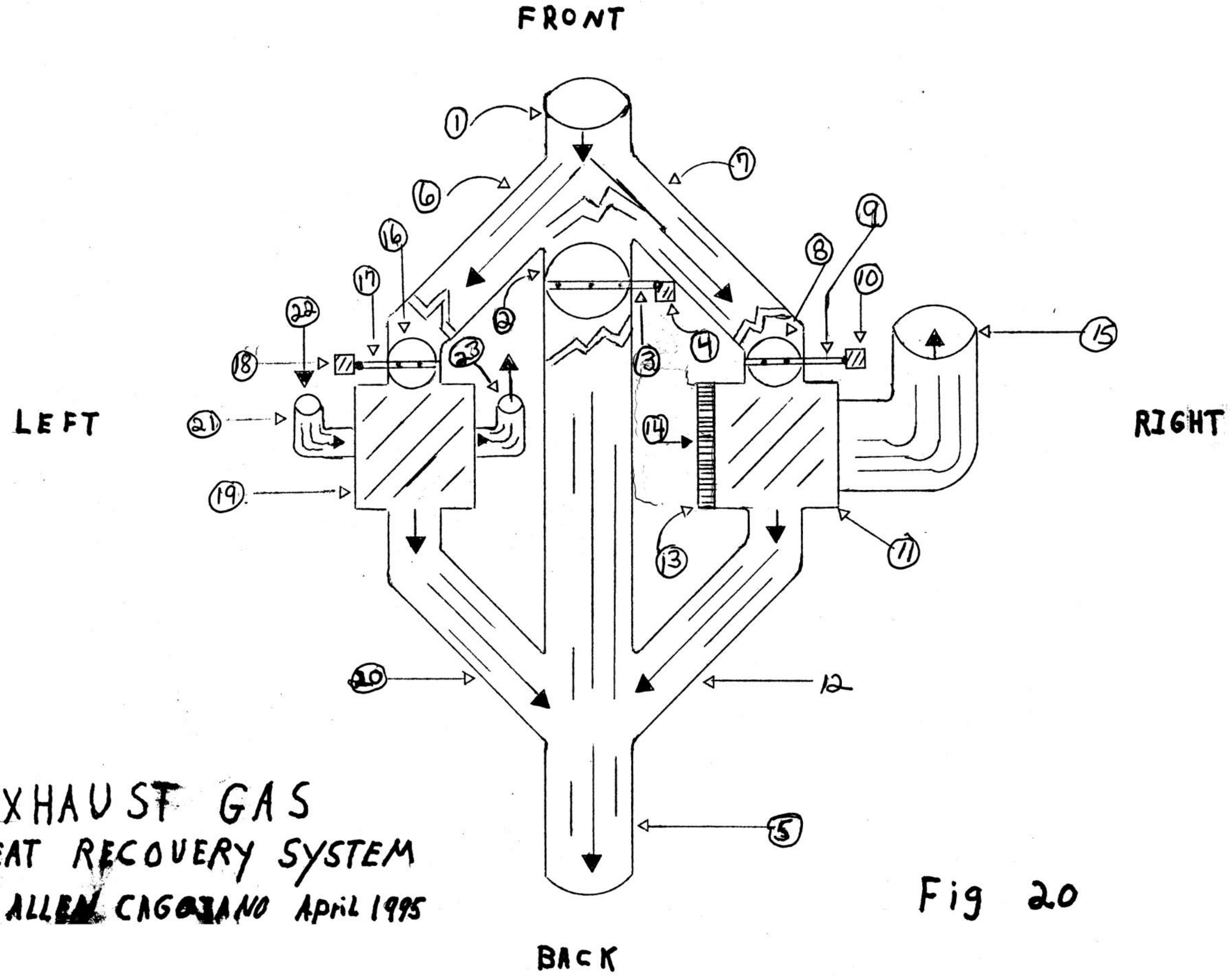

EXHAUST GAS
HEAT RECOVERY SYSTEM
ALLEN CAGGIANO April 1995

Fig 20

STRIGHT FINNED

Heat Exchanger Plates

ALLEN CAGGIANO
April 1995

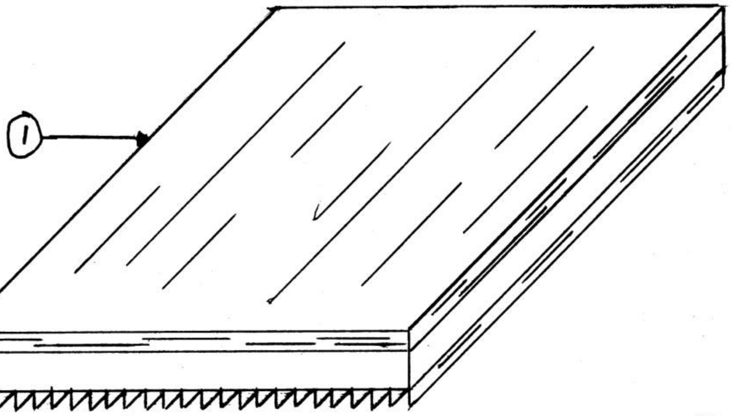

Fig 21
Top Plate

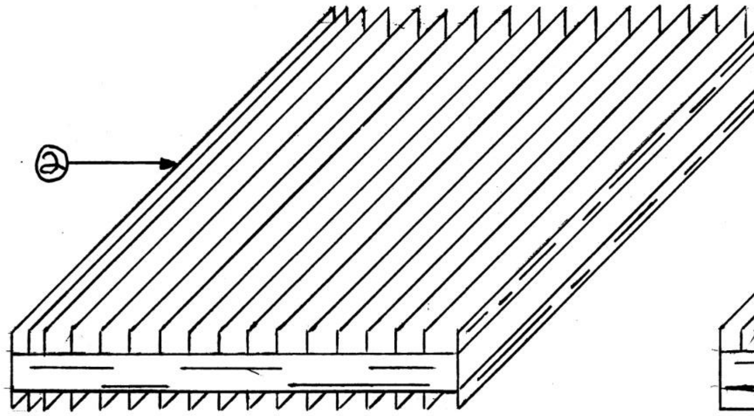

Fig 22
Middle Plates

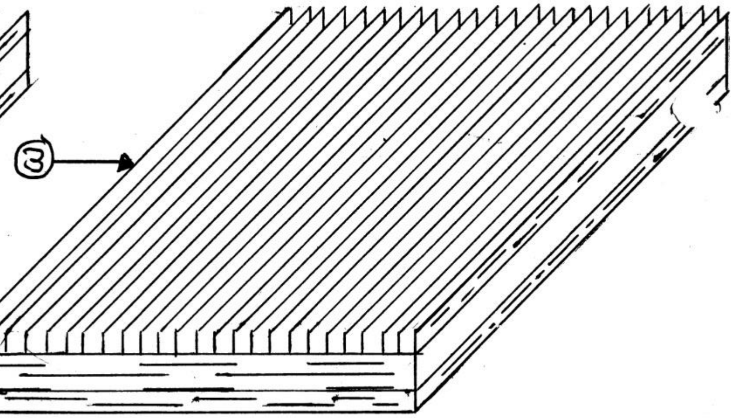

Fig 23
Bottom Plate

STRIGHT FINNED CROSS-FLOW
Air to Air / Liquid to Air
HEAt Exchanger

Fig 24 Left

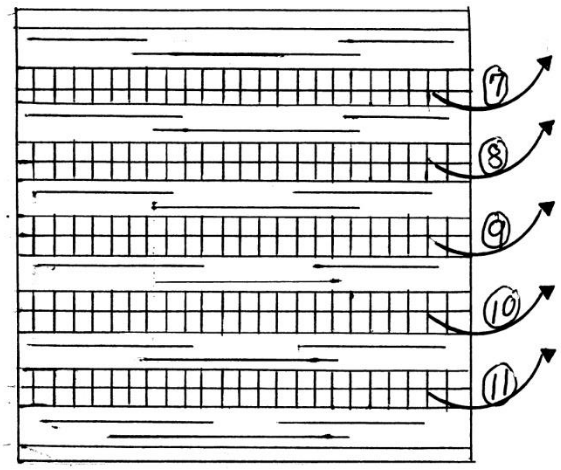

Fig 25 Right

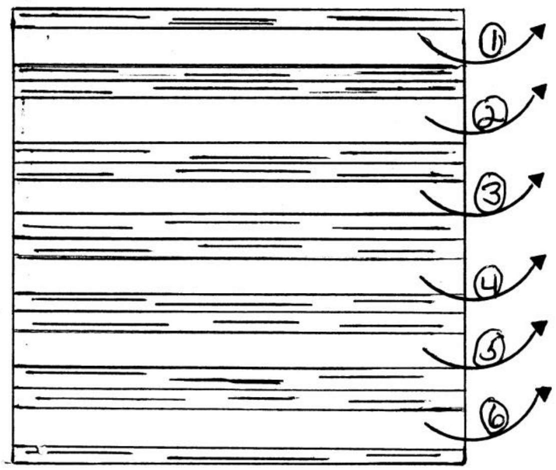

Fig 26

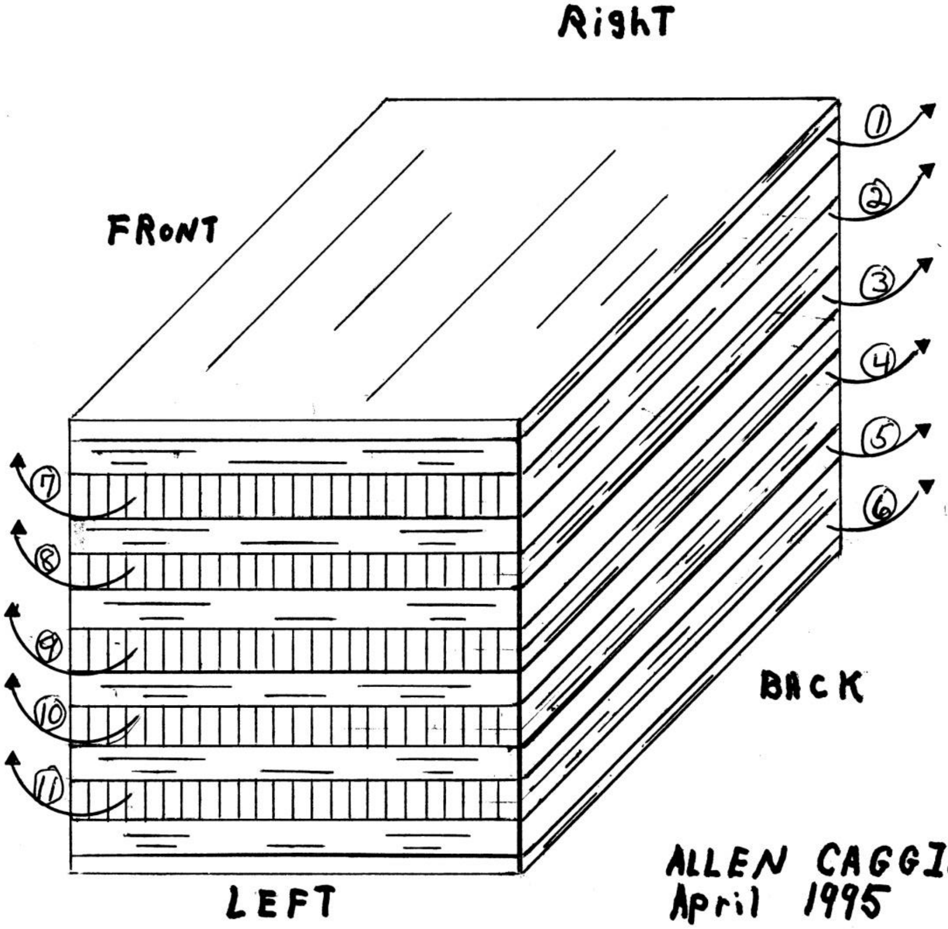

ALLEN CAGGIANO
April 1995

DESCRIPTION OF PARTS LISTED IN THE PATENT FIGS 1-19.

Low pressure fuel pump.
High pressure fuel pump. 4A. Ignition switch. 4B. Relay. 4C. Timer. 4D. Temperature censor.

Coolant coil heater.
Coolant source.
Coolant pump. 8A. Coolant ball valve. *B. Coolant-ball valve.

Combustion engine
Fluid vaporization system. 10A Bottom half of-conventional carburettor.
Vaporizing unit.
Heat exchanger housing.

Rear plate

Rear outer plate. 22A. Left lower channel. 22B. Right lower channel. 23A, Right lower medial cavity. 23B, Left lower medial cavity. 24A. Left medial cavity. 24B. Right medial cavity. 25A. Left upper medial cavity. 25B. Right upper medial cavity. 26A. Upper left channel outlet. 26B. Left upper channel. 27A. Upper right channel outlet. 27B. Right upper outlet. 28A. Left coolant inlet. 28B. Right coolant inlet.

Front plate.
Inner wall plate. 32A. Left upper cavity. 32B. Right lower cavity. 33A. Left lower cavity lower channel. 33B. Right lower cavity lower channel. 34A. Left lower cavity upper channel.

34B. Right lower cavity upper channel.35A.35B. Left upper cavity lower channel.36A. Left upper cavity upper channel.36B. Right upper cavity upper channel.38A. Left lower cavity.38B. Right lower cavity.
Right side plate.
Right side plate solid.

Left side plate.
Left outer side plate.
Air damper assembly.
Air filter left side.
Air heating coil.
Central rod left side plate.

Inlet channel left side plate 50.
Top outer plate.
Upper top plate 4. 62A. Left side channel fluid. 62B. Right side channel fluid.

Fluid inlet bore (fuel bar).

66. Upper end of plate 60 (top plate 4).
68. Lower end of plate 60 (top plate 4).

Lower outer plate.
Inside lower outer plate. 72A. Left side channel. 72B. Right side channel.

Air discharge chamber.
Air damper assembly.
Central rod.

Intermediate lower plate 2.
Lower inner plate. 82A. Right side channel. 82B. Left side channel.

Air discharge opening.
Air damper assembly.

Intermediate upper plate 3.
Upper inner plate 3. 92A. Left side channel. 92B. Right side channel.

Air discharge opening.
Air damper assembly.

Fuel bar assembly.
Upper blind bore.
Lower blind bore. 103A. Inlet end. 103B. Inlet end. 104A. Duper port. 104B. Upper port.

104C. Upper port. 105A. Bore port. 105B. Bore port. 105C. Bore port.
106. Fuel bar rod. 107A. Bore arm 106. 107B. Bore arm 106. 107C. Bore arm 106.
O-ring gasket.
Seals. 110A. Nozzles. 110B. Nozzles. 110C. Nozzles.

111. Return spring. 112A. Top edge protrusions. 112B. Top edge protrusions.
Conventional progressive linkage.
Lower surface.

Upper air passageway.
Medial air passageway.
Lower air passageway

EXHAUST GAS HEAT RECOVERY SYSTEM

Fig 20; Exhaust Gas Heat Recovery System.
Engine Exhaust Gas Middle Inlet.
Exhaust Gas Flow Regulator.
Stainless Steel Rod.
Servo Motor.
Engine Exhaust Gas Middle Outlet.
Engine Exhaust Gas Left Side Inlet.
Engine Exhaust Gas Right Side Inlet.
Engine Exhaust Gas Flow Regulator.

Stainless Steel Rod.
Servo Motor.
Air to Air Crossflow Heat Exchanger.
Engine Exhaust Gas Right Side Outlet.
Intake Fresh Air Filter.
Intake Fresh Air Inlet.
Discharge Fresh Air Outlet.

6. ENGINE EXHAUST GAS LEFT SIDE INLET.
Exhaust Gas Flow Regulator.
Stainless Steel Rod.
Servo Motor.
Liquid to -Air Crossflow Heat Exchanger.
Engine Exhaust Gas Left Side Outlet.
90 Degree Ell.
Coolant Inlet.
Hot Coolant Outlet.

Fig 21.
Top Straight Finned Plate
Middle Straight Finned Plate
Bottom Straight Finned Plate

Fig 22.
Fig 23.
Fig 25 and 26;
In both Air to Air and Liquid to Air heat transfer, hot engine exhaust gas all flow front to back through plates 1, 2, 3, 4, 5 and 6.

Fig 24.
In Air to Air heat transfer, fresh air flows from left to right in plates 7, 8, 9, 10 and 11.
In liquid to air heat transfer coolant flows from left to right in plates 7, 8, 9, 10 and 11.

McClintock David; US PAT # 2,982,26100; Air Motor

Mr.: Mc Clintock created his free energy device known as the "McClintock Air Motor" which is a cross between a diesel engine with three cylinders with a compression ratio of 27 to 1, and a rotary engine with solar and plenary gears. It burns no fuel but becomes self-running by driving its own air compressor.

3.6.0.4. Nutzung durch Zumischung von „On Bord erzeugten“ Knallgases

Es gibt Verfahren Knallgas mittels der „überschüssigen“ Strommenge aus der immer stromerzeugenden Lichtmaschine im jeweiligen Motorraum eines Kfz selbst zu gewinnen und das so erzeugte Knallgas sofort über den Luftsaugstutzen (Lufteinlaß) des Motors gemeinsam mit dem jeweiligen Treibstoff (Benzin oder Diesel) der Verbrennung im Brennraum des Motors zuzuführen und so die Treibstoffkosen zu reduzieren.

Eines von vielen ist das

3.6.0.5. Fran Giroux’s System

Ein System das auch jederzeit käuflich, aber leider vollkommen überteuert ist. Durch Augenschein konnten ich mich überzeugen, daß das System im Prinzip funktioniert, einen sehr interessanten Verwendungsansatz darstellt, leider keineswegs ausgereift und (noch nicht!) zu empfehlen ist.

Der Erfinder Herr F. Giroux verkauft nicht ein Elektrolyseverfahren, sondern ein „System“ und kaum ein Käufer merkt es bevor er sein Geld dafür ausgibt.

Sein System besteht u. a. aus:
Reduzierung des Reifendruckes des Kfz.
Dazu bedarf es nicht Herrn Giroux, man fühlt sich da verschaukelt.

Verwendung von Benzin- und Motoröl Additiven.
Ein nettes Zusatzgeschäft, das dem Erzeuger der Additive und auch Herr Giroux sicher einiges einbringt, aber ob es für Sie als Anwender sinnvoll ist............?

Vorwärmung des zugeführten Treibstoffes.
Ein nicht uninteressante Variante für kalte Klimazonen, dort ist es sicherlich von Vorteil, aber was dann, wenn das Kfz in warme Klimazonen gefahren wird und der ohnehin schon warme Treibstoff zur Dampfblasenbildung neigt...............

Einführung des on Board mittel Elektrolyse erzeugten Knallgases in den Luftansaugöffnung.
Das funktioniert tatsächlich. Die tatsächliche Treibstoffeinsparung von nur etwa 10% hält aber (noch nicht!) einen Preis > Leistungsvergleich stand zumal auch kaum jemand in der Lage sein wird das angebotene Equipment selbst in das Kfz einzubauen. Zum Einbau sind sowohl ausgefeilte Kfz. elektrotechnisches als auch Kfz. elektronisch relevantes Wissen und eine gute Portion handwerkliches Geschick nötig.

Ein anderes System, das in diese Gruppe paßt, ist die rumänischen Idee der Firma
ROKURA Aplicatii Industriale, Bucharest ROMANIA;

3.6.0.6. Rokura System

Oxygen gas mixture enriched gasoline in a spark ignition engine

KEYWORDS

(Hydrogen-oxygen gas mixture, electrolyze technology, combustion duration, cyclic variability parameters)
ABSTRACT

One of the most promising methods to increasing brake thermal efficiency of a spark ignition engine is the fueling with hydrogen-enriched gasoline. A gaseous fuel containing high percentages of hydrogen and oxygen obtained directly from water by a special kind of electrolyze technology is mixed with gasoline in the mixing chamber of a carbureted Dacia engine.

The paper presents the results concerning performance, efficiency and emissions when the engine was operated at light and medium loads emphasizing the possibility offered by this gaseous fuel to reduce fuel consumption and pollutants from exhaust gases, in comparison with the engine operated on gasoline normal fuelling.

In the same time, it is performed an analysis of the combustion process, on the basis of the combustion duration and cyclic variability parameters.
Experiments confirmed the possibility of expanding the stability limit towards lean domain with an increase of brake thermal efficiency, a reduction of HC emissions and an increase of NOx emissions.

INTRODUCTION

The alternative fuels and the additives for classical petroleum fuels represent an important research domain for many researches in view of reducing fuel consumption and pollutant emissions produced by the internal combustion engines (1).

The use of hydrogen as an additional fuel to gasoline has been considered since the early ’70, the alternative to the full hydrogen powered engine. Hydrogen addition positively influences combustion and due to the high laminar burning velocity and the wide flammability limits of hydrogen represents a possible means to use leaner fuel-air mixtures, with favorable effects on exhaust emissions and thermodynamic efficiency (2).
The addition of a hydrogen rich gas to gasoline in a spark ignition engine seems to be particularly suitable to arrive at a near-zero emission engine, which would be able to easly meet the most stringent regulations (3).

This work, which was performed at University POLITEHNICA of Bucharest, Thermal Research Center from Mechanical Engineering Faculty in cooperation with ROKURA Aplicatii Industriale Srl. is included in the same activity area.

Studies on the electrolytic separation of water into hydrogen and oxygen date back to the 19-th century. More recently, there has been considerable research in the separation of water into a mixture of hydrogen and oxygen gases, known under various names: H2/O2 systems, Brown gas, Rhodes gas, etc.

In accordance with these patents as well as the subsequent rather vast literature in the field, the Brown gas is defined as a combustible gas composed of conventional hydrogen and conventional oxygen gases, having the exact stoichiometric ratio of 2/3 (or 66.66% by volume) of hydrogen and 1/3 (or 33.33% by volume) of oxygen.

An apparently new mixture of hydrogen and oxygen hereon referred to as the HHO gas was developed by HTA Inc. USA. The technology has been licensed to ROKURA Aplicatii Industriale Srl Bucuresti. The new HHO gas is regularly produced via a new type of electrolyzer and has resulted to be distinctly different in chemical composition than the Brown gas. In this gas system, all intermediary species are present: H2, H, O2, O, OH, HO, H2O, HO2, H2O2, etc. The rather unique features of the HHO gas are based upon the high reactivity of its constituents and the stability of the system. An important feature of this gas is its anomalous adhesion (adsorption) to gases, liquids and solids, as it was experimentally verified, thus rendering its use particularly effective as an additive to improve the environmental quality of other fuels, or other applications. This feature is manifestly impossible for conventional gases as H2 and O2, and thus confirming again its novel chemical structure (4).

EXPERIMENTAL DETAILS

Four different tests were carried out on a Dacia carbureted spark ignition engine having 1397 cc displacement, 76 mm bore, 77 mm stroke and 9.5 compression ratio. The original carburetor was modified in order to permit an open loop control of the relative air-fuel ratio. The HHO gas which was delivered by an electrolyzer was introduced in the mixing chamber of the carburetor through a manual control system comprising pressure regulators, flow meters, and thermal resistances in order to control the specified pressures, temperatures, and gases flow rates. The absolute pressure at the intake system was 2 bar.

Two operating engine regimes were investigated, at two loads, a light one 2.5%, and a high one of 50% of the maximum throttle opening, at two speeds, 1600 rpm, and respectively 2500 rpm, which were considered characteristic for the current usage of an automobile engine. A closely stoichiometric and a lean mixture were tested for each of the two operating regimes.

Experimental investigation of the engine performance was performed on an engine test bed provided with an eddy current dynamometer Hofmann I2a, 200kW at 10000 rpm for torque measurement. The fuel consumption measurement was made with a flow meter Fisher Rosemount Flo-Tron 10E, 1…100 kg/h, and the air consumption with a standardized plate orifice mounted on an air tank. The parameters of the electric discharge and the spark advance were measured and registered with a high voltage probe Tektronix P 6015, a current probe P 6021 and an oscilloscope TDS 320. The composition of the exhaust gases was determined with a gas analyzer AVL DiGas 4000, and the corresponding relative air-fuel ratio aws checked by an UEGO sensor, NTK TC 6110C. The cylinder pressure was measured too, using an indicating system including a pressure transducer Kistler 601A, a charge amplifier Kistler 5001 C, a data acquisition card AVL Indimeter 617, a crank angle encoder AVL 365. Water, oil and gases temperatures were measured with thermal resistances and thermocouples in order to evaluate the engine thermal regime.

RESULTS

The first test performed at light load, speed 1600 rpm and $\lambda \approx 0.92$-0.94, shows in comparison at the optimum spark advances ─ 24º CAD BTDC for gasoline and 18º CAD BTDC for gasoline-HHO gas blend ─ an increasing of 7.4% for the brake thermal efficiency (Fig. 1).
The optimum gas flow rate which is about of 300 l/h corresponds to an approximately 1.7% volumetric fraction of hydrogen in the mixed fuel (Fig. 2).

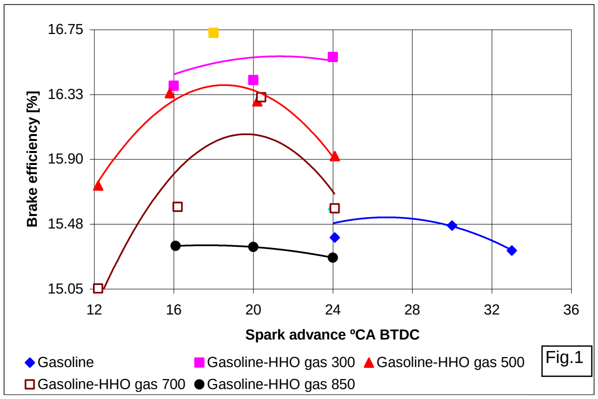

Fig.1

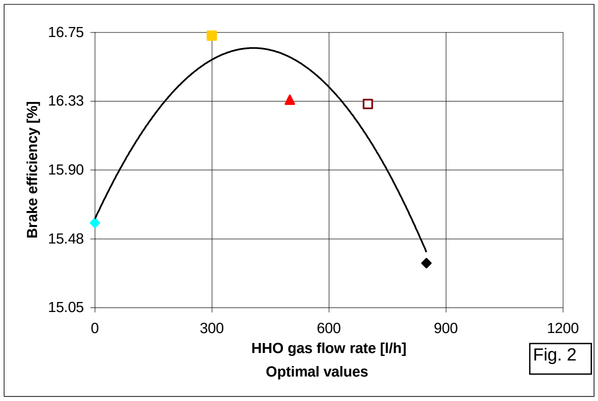

Fig. 2

This increasing in the brake thermal efficiency correlates well with the increasing of the indicated mean effective pressure (IMEP) of 5.6% (Fig. 3 and Fig. 4).

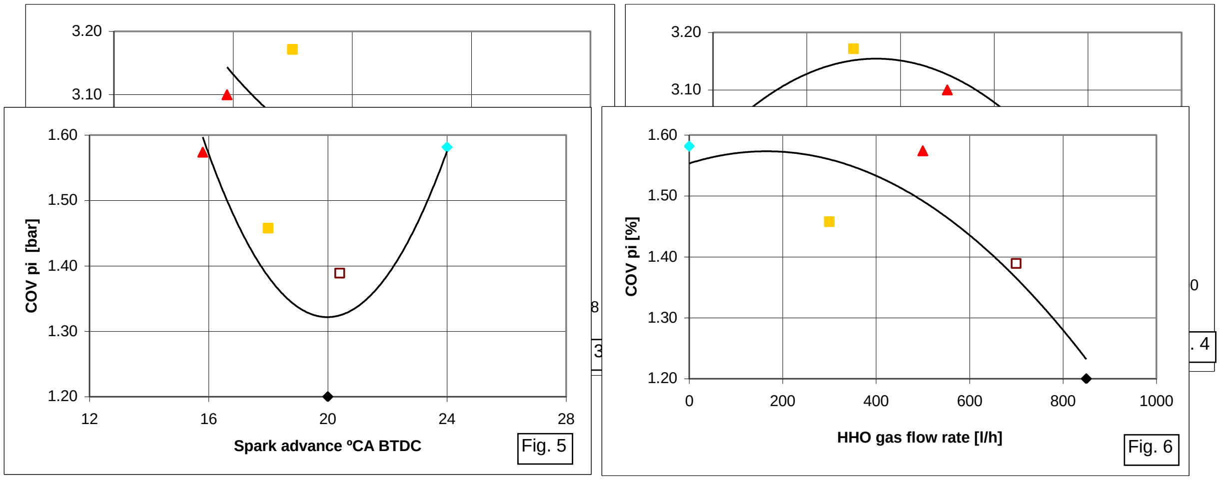

Fig. 5

Fig. 6

The cyclic variability coefficient of IMEP (COVpi), another important parameter, which characterizes the engine drive ability, is for both fuels in the normal range, below 2% (Fig. 5 and Fig. 6).

Part of these improvements of the engine performances may be explained by the changing of the burning phase durations. The initial combustion phase (DAI 5%), conventionally considered as the duration for 5% mass fraction burned, initiating at the spark timing is significantly reduced with about 15.5% (Fig. 7 and Fig. 8). This is probably due to the kinetic effect of the HHO gas on the combustion process, which composition includes species like H2, OH, HO2, and H2O2. The effect of H2 addition on gasoline, as fastening combustion result it is thus well proved, but the presence of the other species in the mixed fuel composition it is still not clearly understood like effect on combustion process.

In the same time, it can be emphasized that increasing the gas flow rate, a decreasing of the main combustion phase (DAI 50%), conventionally considered between the corresponding moments for 50% and 5% mass fraction burned occurs. As a consequence of better combustion, the brake power is increasing with about 14.4% (Fig. 9 and Fig. 10).

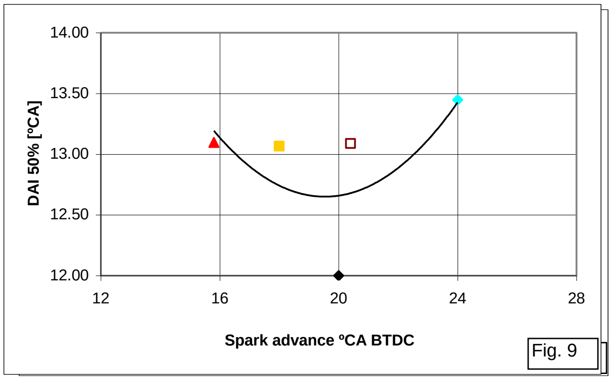

Fig. 9

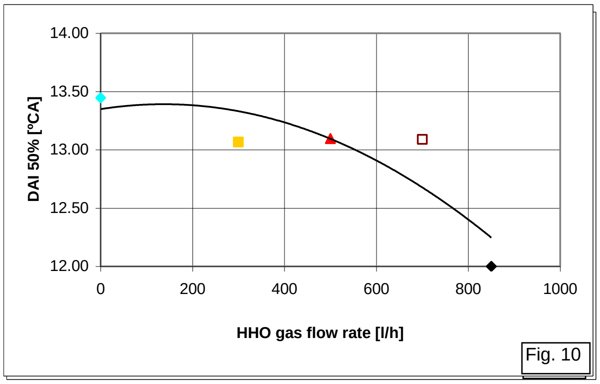

Fig. 10

Improving combustion by a hydrogen rich gas addition, all the emission levels are substantially reduced with 5.5% for CO, with 20% for CO2, with 33% for HC and only with 1.5% for NOx respectively (Fig. 11, Fig. 12, Fig. 13 and Fig. 14). A smooth trend of increasing the NOx emission with the gas flow rate may also be seen. This trend may be explained by the increased presence of oxygen, which is added to the mixed fuel when the HHO gas flow rate is growing.

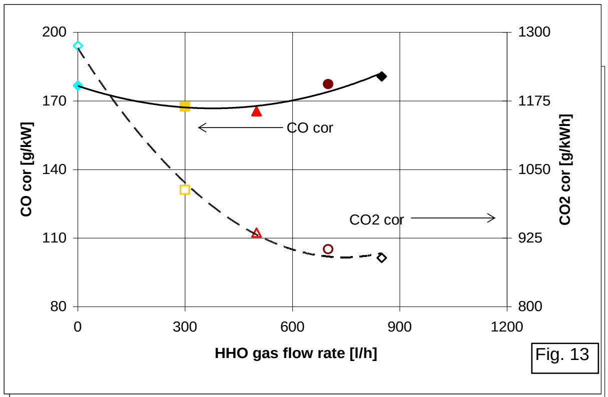

Fig. 13

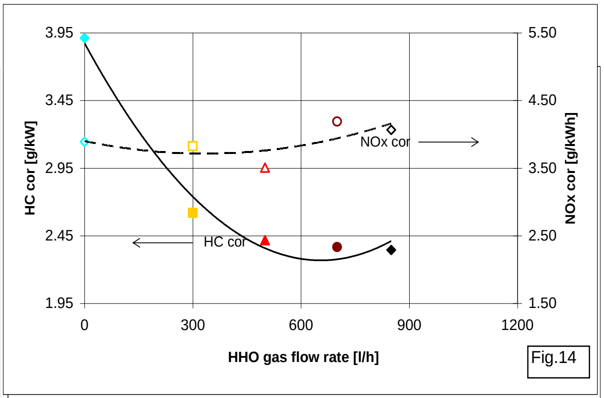

Fig.14

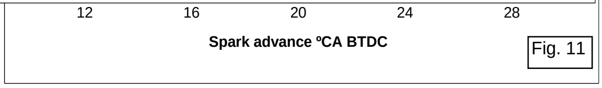

Fig. 11

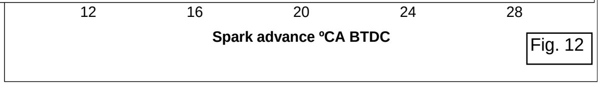

Fig. 12

The second test performed at light load, speed 1600 rpm and λ ≈ 1.18-1.21 shows by comparison at the optimum spark advances of 35.5º CAD BTDC for gasoline and 33.7º CAD BTDC for gasoline-HHO gas blend an increasing of 22.9% in the brake thermal efficiency. The optimum gas flow rate remains around 300 l/h (Fig. 15 and Fig. 16), which gives approximately the same hydrogen fraction in the mixed fuel as for the previous tested operating regime.

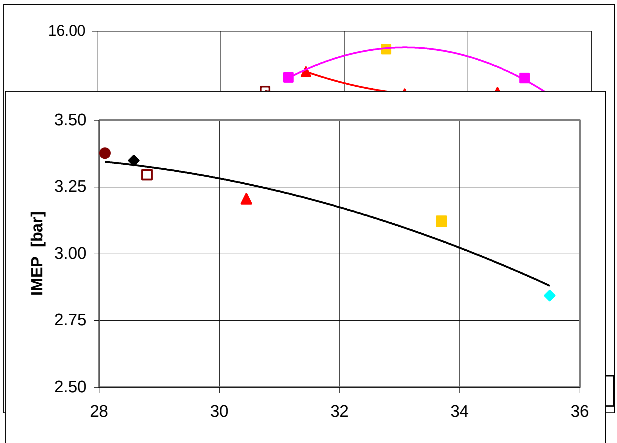

Fig. 17

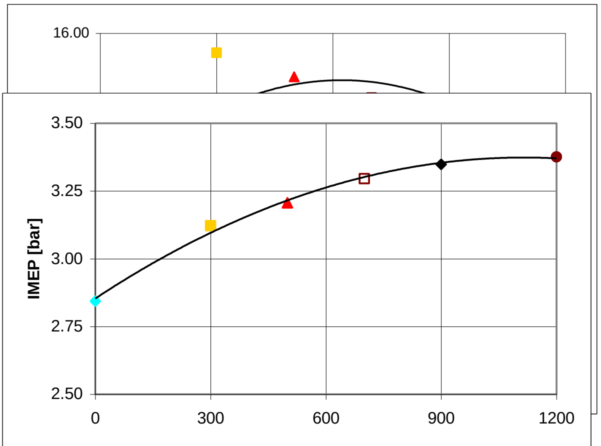

Fig. 18

This efficiency increasing correlates well with the increasing of 9.8% of the indicated mean effective pressure IMEP (Fig. 17 and Fig. 18).

In this case, the engine operated with lean mixtures, (COVpi) is up enough on the highest acceptable limit of 10% (5). Adding HHO gas, while maintaining quite the same air-fuel ratio, the cyclic variability coefficient values are significantly reduced with 66.3%, and finally reach the usual domain, which is maintained (Fig. 19 and Fig. 20). At high values of the HHO gas flow rates, some contradictory aspects occur and so, even that the indicated mean effective pressure increases, the cyclic variability coefficient increases too. This behavior may represent an explanation for the brake efficiency reduction at high HHO flow rates.

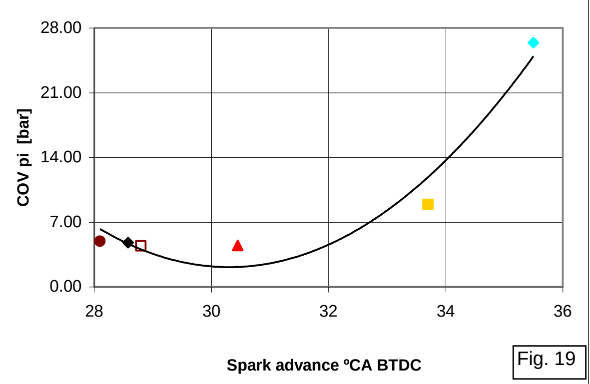

Fig. 19

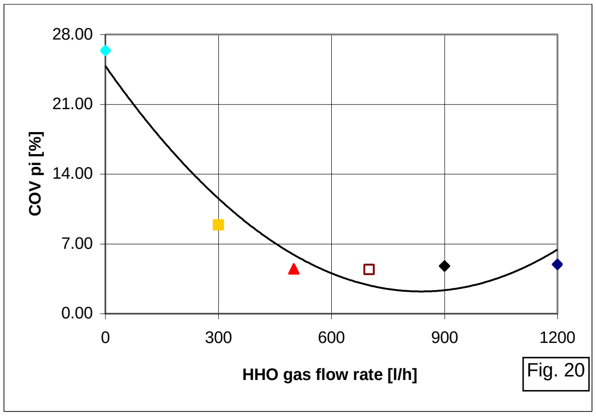

Fig. 20

Concerning the duration of the combustion phases, it can be emphasized that the most important effect is on the initial phase, which is reduced with 30%, from 36.9º CAD for gasoline, to 25.8º CAD for gasoline-HHO gas at 300 l/h. It is important to emphasize that the initial phase duration, which was approximately doubled by leaning the mixture from λ ≈ 0.92-0.94 to λ ≈ 1.18-1.21 when engine was fueled only with gasoline, comes to normal values around 22-25º CAD by adding HHO gas. In the case of lean mixture higher gas flow rates have not the same major effect (Fig. 21 and Fig. 22) as in the case of rich mixture.

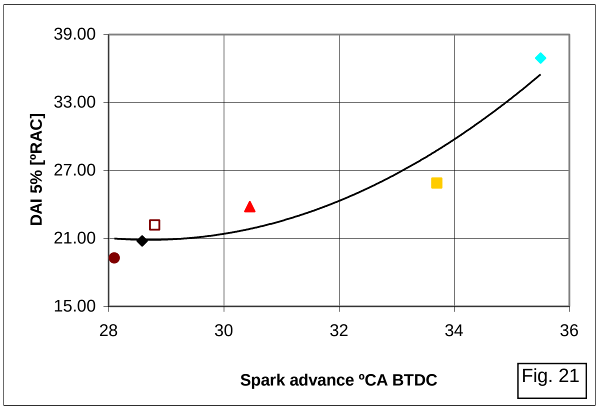

Fig. 21

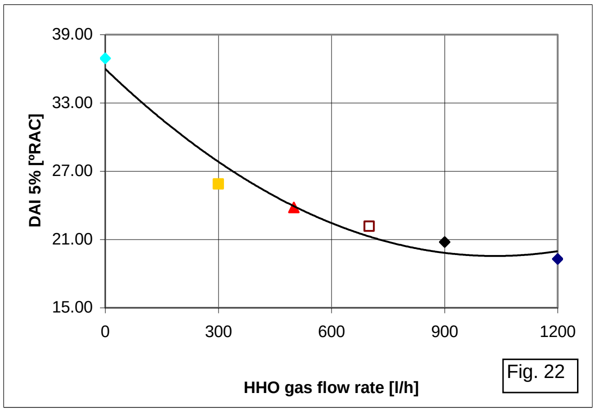

Fig. 22

The main combustion phase presents a similar trend, the highest reduction being within the optimum HHO gas domain (Fig. 23 and Fig. 24).

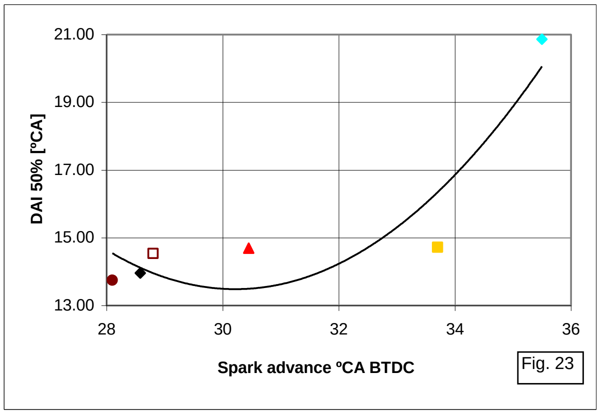

Fig. 23

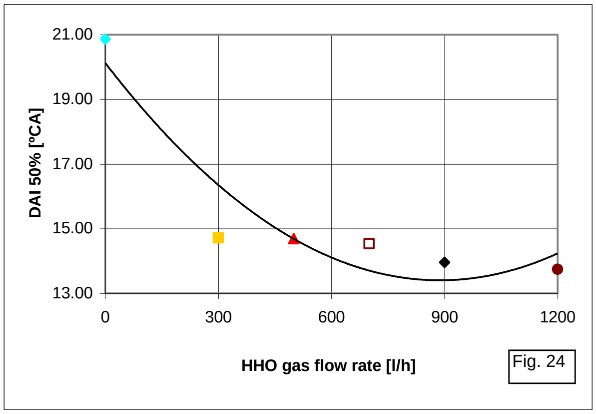

Fig. 24

The effect of HHO gas enrichment gasoline is the increased proportion of hydrogen in the mixed fuel (gasoline-HHO gas), which determines an important accelerating of the combustion process. Faster combustion determined by a rapid release of a higher heat (lower heating value of hydrogen is approximately three times higher than gasoline, and laminar flame speed of hydrogen is approximately ten times higher than gasoline) leads to an important increase with the HHO flow rate, of the maximum pressure in cycle (Fig. 25 and Fig. 26).

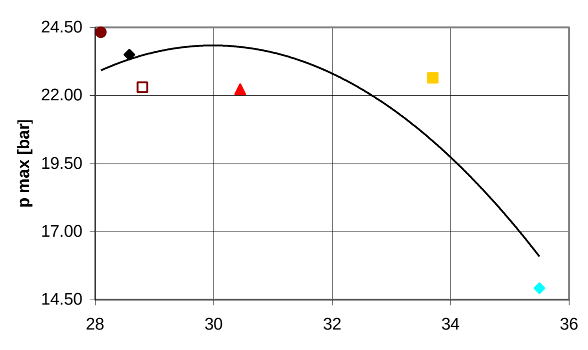

Fig. 25

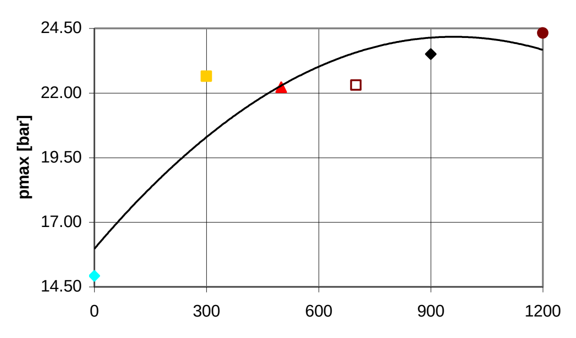

Fig. 26

The exhaust emissions, present significant reductions with 47.9% for CO, with 18.7% for CO2, with 66.9% for HC, but a strong increasing with 163.5% for NOx (Fig. 27, Fig. 28, Fig. 29 and Fig. 30). The same trend of increasing the NOx emission with the HHO gas flow rate is evident. Higher pressures and temperatures associated with significant proportions of O2 presented in the mixed fuel represent the main parameters that increase the NOx emission.

If the abatement of the CO and HC emissions would be a main goal, one should consider the possibility of switching from the conventional rich mixture (operating regime 1. λ ≈ 0.92-0.94) for the normal operation with pure gasoline, to the lean mixture for engine operated on optimized gasoline-HHO gas mixture (operating regime 2. λ ≈ 1.18-1.21). This transition is possible since the (COV)pi with gasoline-HHO gas mixture operation is maintained in normal limits and would give an CO abatement of 97% an HC abatement of 19.7%, while the NOx emission would increase with 181.7%.

Concerning the third and the fourth test performed, the results obtained are similar to the previous, with increasing, but not so evident, of brake thermal efficiency, with shortening of the

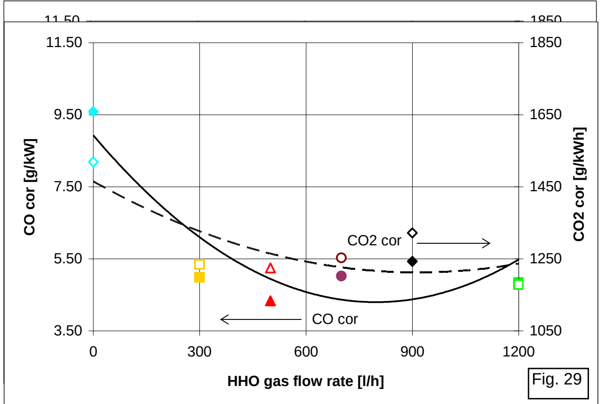

Fig. 29

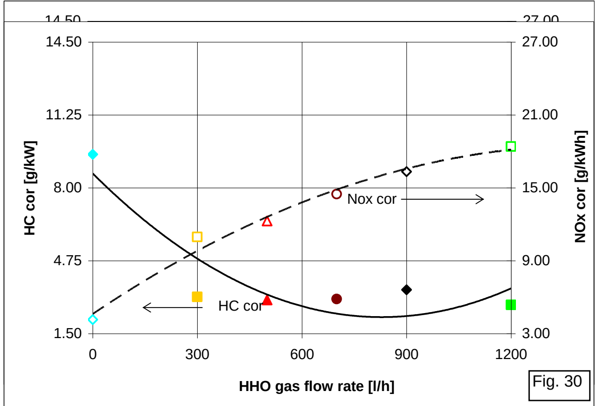

Fig. 30

combustion phases duration, with reduction of the CO, CO2 and HC emissions, and increase of NOX in the exhaust gas.

CONCLUSIONS

1. The HHO gas contribution leads for all the investigated regimes to optimum spark timings lower than those corresponding to normal gasoline fueling; this effect may be determined by a combustion process acceleration.

2. The initial combustion phase, which is extremely important for the combustion process, presents a minimum, or is reduced by HHO gas flow rate increasing, while the main combustion phase remains relatively constant, or is slowly reduced.

3. The peak fire pressures increase with the HHO gas flow rates used, as a consequence of the total combustion duration shortening, too.

4. The reduction of the total combustion duration and the damping of the cyclic fluctuations lead to an efficiency increasing which is more significant at light loads, small speeds, and lean mixture; performance and efficiency improvements, associated with pollutant emissions reductions are more evident in the low operating regimes domain.

5. There is still necessary an intense research activity to defining the maps for optimum spark timings, air-fuel ratios, and HHO gas fractions.

REFERENCES

(1) ENERGY 2050 A Policy Briefing Series, “The Future of Alternative fuels”, July 20, 2005.
(2) N., Apostolescu, R., Chiriac “A Study of Combustion of Hydrogen-Enriched Gasoline in a Spark Ignition Engine”, SAE Paper 960603.
(3) E., Conte, K., Boulouchos “Influence of Hydrogen-Rich-Gas Addition on Combustion, Pollutant Formation and Efficiency of an IC-SI Engine” SAE Paper 2004-01-0972.
(4) R., M., Santilli “A New Gaseous and Combustible Form of Water” Institute for Basic Research, Internal Report, 2000.
(5) J., B., Heywood “Internal Combustion Engine Fundamentals” McGraw-Hill, 1988.

3.6.0.7. Molekularzerstäuberdüse > Wasser-/Alkohol-Einspritzsystem

Prinzipiell wird der Boost Cooler hauptsächlich bei aufgeladenen Motoren eingesetzt. Sinn und Zweck ist es nämlich durch gezielte Kühlung der Ladeluft dessen Dichte zu erhöhen und den Motor somit wesentlich mehr Luft anbieten zu können. Eine Temperaturverminderung um ca. 10°C der Ladeluft ergibt etwa 3% Leistungssteigerung (Faustregel).

Daher wird auch schnell klar welche Bedeutung ein Ladeluftkühler eigentlich hat denn dieser kühlt die Luft gut um die 40-55°C ab. Leider hat die Ladeluftkühlung Ihre physikalischen Grenzen, welche durch die Umgebungstemperatur und der Baugröße bedingt ist. Ist diese erreicht bringt eine weitere Ladedruckerhöhung praktisch keine Mehrleistung mehr und es kommt zu klopfender Verbrennung, welche schließlich zum Motorschaden führt.

Neben der Leistungssteigerung ergibt sich auch eine enorme Erhöhung der Klopfzahl der Verbrennung bei aktiver Einspritzung. Diese Tatsache macht es erst recht möglich den Ladedruck des Turbos erheblich zu erhöhen, und zwar weit mehr als es ohne den Boost Cooler möglich wäre.

Warum? - Weil bei Erhöhung des Ladedrucks die Verbrennung immer mehr zum Klopfen neigt und damit Grenzen gesetzt sind, die mit dem Boost Cooler erheblich überschritten werden können, ohne daß Klopfen auftritt. Somit kann man also ohne weiteres 1,5 bar und mehr mit super Benzin gefahren werden. Die sich daraus ergebende Leistungssteigerung liegt je nach Fahrzeug und abhängig davon ob die Motorsoftware auf das System angepaßt wird ca. zwischen 15 und 40 PS Mehrleistung.

Das Prinzip ist relativ simpel. Aus einem Vorratsbehälter wird mit einer Pumpe das Wasser Alkohol Gemisch angesaugt. Die Pumpe fördert direkt in das druckseitige Sammelrohr der Ladeluft. Die Molekularzerstäuberdüse wird idealerweise nach einen vorhandenen LLK plaziert. Die Pumpe wird aber nur ab einem bestimmten Ladedruck gestartet, sonst verschluckt sich der Motor.

Unter www.ets-power.de gibt es Infos.

3.6.0.8. Wasseremulsionen

insbesondere mit Dieselöl zum Betrieb von vornehmlich Explosionsmotoren bringen eine erhebliche Treibstoffeinsparung und Schadstoffreduzierung am direkteinspritzendem Dieselmotor.

3.6.0.9. Rheinisch westfälische technische Hochschule in Aachen

www.rwth-aachen.de

Grundlagen

Zunächst wurden an einem Einzylinder-Dieselmotor Untersuchungen zur Wirksamkeit der Einbringung von Wasser und Wasserperoxyd in den Brennraum auf die Schadstoffemissionen - insbesondere Ruß- durchgeführt. Als eine sehr effektive Maßnahme zur Reduzierung von Ruß und NOx zeigte sich die Emulsionseinspritzung, bei der Dieselkraftstoff und Wasser/Wasserstoffperoxyd vor der Einspritzpumpe durch einen Mischer emulgiert werden und anschließend in den Brennraum eingespritzt werden. Es ist bekannt, daß durch die Wassereinbringung in den Brennraum eine Temperaturabsenkung stattfindet, wodurch die Bildung des thermisch gebildeten NO zurückgeht. Dieses besitzt bei der motorischen Verbrennung einen Anteil von etwa 90% an der gesamten NOx-Emission. Durch die erzielte Temperaturabsenkung kann jedoch die Rußreduzierung nicht erklärt werden. Im Gegenteil steigt hierdurch die Rußemission an, da bei niedrigen Temperaturen weniger Radikale (OH) zur Verfügung stehen und damit die Nachoxidation des Rußes langsamer abläuft. Dieser Effekt wird z. B. bei der Wassereinbringung durch eine Luftrohreindüsung beobachtet. Es müssen daher bei der Rußreduzierung durch Emulsionseinspritzung andere Effekte eine entscheidende Rolle spielen.

Meßtechnik

In diesem Projekt wird die Wirkungsweise der Emulsionseinspritzung sowohl mit Hilfe zweier optischer Meßverfahren als auch mit einem Einspritzgesetzindikator sowie üblicher Indizier- und Abgasmeßtechnik näher betrachtet. Bei dem erstem optischen Verfahren wurde mit Hilfe eines Cu-Dampflasers und einer Highspeed -Trommelkamera die Strahlausbreitung im Motor mit einer hohen zeitlichen und örtlichen Auflösung gemessen. Die zeitliche Auflösung entsprach bei 2000 U/min. 0.4°KW, wodurch eine detaillierte Auswertung des Einspritzvorgangs möglich wurde. Das zweite verwendete optische Verfahren ist eine Erweiterung der Integralen-Lichtleit-Meßtechnik, die Zyklusaufgelöste Emissionsspektroskopie (ZES). Mit ihr ist es möglich, während der Verbrennung Ruß- und OH-Strahlung integral im Brennraum zeitlich aufgelöst zu erfassen.

Ergebnisse

Es besteht ein gute Korrelation zwischen den klassischen Indizier Verfahren und den optischen Verfahren. Mit Hilfe der optischen Meßtechniken kann gezeigt werden, daß bei der Diesel/Wasser - Emulsionseinpritzung die Rußreduzierung vor allem durch eine bessere Gemischbildung infolge einer sehr guten Kraftstoffzerstäubung erzielt wird. Die gute Gemischbildung wird dadurch hervorgerufen, daß das im Kraftstoff enthaltene Wasser den Strahl durch eine höhere Dichte und einem damit höherem Impuls aufreißt. Die Messungen wurden an einem VW-Transportmotor 1.91 TDI und an einem 1-Zylinder-Forschungsmotor durchgeführt. Es wurden verschiedene Kraftstoffe und Kraftstoff-Wasser-Verhältnisse auf deren Einspritzverhalten untersucht. Weitere Untersuchungen sind am 4-Zylinder-Vollmotor geplant. Diese beinhalten Abgas- und Indizier Messungen sowie Emissionsspektroskopie bei Emulsionseinspritzung.

3.6.1.1. MTU Friedrichshafen GmbH

Ein Technologieführer bei Dieselmotoren und Antriebssystemen

Unter: http://www.mtu-friedrichshafen.com/de/frameset/f_apelsp.htm findet (fand?) man folgendes:

Aggregate mit Kraftstoff-Wasser-Einspritzung

Wasser im Kraftstoff säubert die Abgase. Bisher standen Planern und Betreibern, die mit ihren Dieselaggregaten die verschärften Abgasemissionsvorschriften erfüllen wollten, nur die Technik des SCR-Katalysators und des Rußfilters zur Verfügung. Mit der Kraftstoff-Wasser-Einspritzung bietet MTU eine wirtschaftlichere Alternative. Diese neue Technologie bietet erhebliche Vorteile:

- geringer Bauraum

- Erreichen der vollen Wirkung schon bei Teillast

- minimaler Wartungsaufwand

- keine Erhöhung des Abgasgegendrucks
- keine Erhöhung des spezifischen Kraftstoffverbrauchs

Das Prinzip beruht auf der Einspritzung einer Emulsion, die vor dem Motor aus Kraftstoff und Wasser hergestellt wird. Durch die Wasserbeigabe werden die Spitzentemperaturen im Motor abgesenkt und dadurch die NOx-Bildung reduziert. Als Nebeneffekt findet eine deutliche Rußminderung und auch eine Schadstoffreduzierung statt.

Das Mischungsverhältnis beträgt immerhin: 2/3 Kraftstoff, 1/3 Wasser!

Es entstehen keine Änderungen bei Startverhalten, Lastaufschaltung oder Lastabwurf gegenüber dem reinen Dieselbetrieb. Einzige Bedingung beim Einsatz der Technik in den zweikreisgekühlten 8-, 12- oder 16-Zylinder-Motoren der Baureihe 396 ist ein Spüllauf nach dem Emulsionsbetrieb. Dieser dauert nur fünf Minuten und wird automatisch bei 20% Last vorgenommen.

Anmerkung:

Aus MTU Insiderkreisen weiß ich, diese Wassereinspritzungsmotore vor allem nach Saudi-Arabien verkauft werden, also ich denke mir etwas dabei.........

3.6.1.2. Gunnerman Rudolf; USP #: 5,156,114;

October 20, 1992; Gunnerman Motor Corporation; Sacramento CA

Aqueous fuel for internal combustion engine and method of combustion

Abstract

An aqueous fuel for an internal combustion engine is provided. The fuel comprises water from about 20 percent to about 80 percent by volume of the total volume of said fuel, and a carbonaceous fuel selected from the class consisting of ethanol, methanol, gasoline, kerosene fuel, diesel fuel, carbon-containing gaseous or liquid fuel, or mixtures thereof. A method for combusting an aqueous fuel in an internal combustion engine is provided. The method produces approximately as much power as the same volume of gasoline. The method comprises introducing air and aqueous fuel into a fuel introduction system for the engine. The fuel comprises water from about 20 percent to about 80 percent by volume of the total volume of the fuel, and a carbonaceous fuel from ethanol, methanol, gasoline, kerosene fuel, diesel fuel, carbon-containing gaseous or liquid fuel, or mixtures thereof, and introducing and combusting said air/fuel mixture in a combustion chamber or chambers in the presence of a hydrogen producing catalyst to operate the engine.

Description FIELD OF THE INVENTION

This invention relates to a novel aqueous fuel for an internal combustion engine and to a novel method of combusting such fuel in an internal combustion engine as well as to a novel fuel mixture which results from the introduction of the aqueous fuel into the combustion chamber of an internal combustion chamber in the presence of a hydrogen-producing catalyst.

BACKGROUND OF THE INVENTION

There is a need for new fuels to replace diesel and gasoline for use in internal combustion engines, especially engines used in motor vehicles. Internal combustion engines operating on gasoline and diesel fuel produce unacceptably high amounts of pollutants which are injurious to human health and may damage the earth's atmosphere. The adverse effects of such pollutants upon health and the atmosphere have been the subject of great public discussion. Undesirable pollutants result from combustion of carbonaceous fuel with combustion air that contains nitrogen. The relatively large amounts of air used to combust conventional fuels is, therefore, a primary reason for unsatisfactory levels of pollutants emitted by vehicles with internal combustion engines.

SUMMARY OF THE INVENTION

A novel fuel and fuel mixture, and novel method of combustion, have been discovered which will reduce pollutants produced by internal combustion engines operated with conventional carbonaceous fuels such as gasoline, diesel fuel, kerosene fuels, alcohol fuels such as ethanol and methanol, and mixtures thereof. The new fuel mixture is also much less expensive than carbonaceous fuel such as gasoline or diesel fuel because its primary ingredient is water. The term "internal combustion engine" as used herein is intended to refer to and encompass any engine in which carbonaceous fuel is combusted with oxygen in one or more combustion chambers of the engine. Presently known such engines include piston displacement engines, rotary engines and turbine (jet) engines. The novel aqueous fuel of the present invention has less than the potential energy of carbonaceous fuels but is nonetheless capable of developing at least as much power. For example, an aqueous fuel of the invention comprising water and gasoline has about 1/3 the potential energy (BTU's) of gasoline, but when used to operate an internal combustion engine, it will produce approximately as much power as compared with the same amount of gasoline. This is indeed surprising and is believed to be due to the novel fuel mixture that results from the release of hydrogen and oxygen and the combustion of hydrogen when the novel aqueous fuel is introduced to a combustion chamber of an internal combustion engine and combusted with relatively small amounts of combustion air in the presence of a hydrogen-producing catalyst by the novel method of the present invention.

In its broadest aspects, the aqueous fuel of the present invention comprises substantial amounts of water, e.g., up to about 70 to about 80 percent by volume of the total volume of aqueous fuel, and a gaseous or liquid carbonaceous fuel such as gasoline, ethanol, methanol, diesel fuel, kerosene-type fuel, other carbon-containing fuels, such as butane, natural gas, etc., or mixtures thereof. In utilizing this fuel with the novel method of the present invention, aqueous fuel and combustion air are introduced into the engine's fuel introduction system, for receiving and mixing fuel and combustion air and introducing the fuel/air mixture into the combustion chamber(s). Such systems may include a conventional carburetor or fuel injection system. Although it is not necessary for the practice of the invention, when using an engine with a carburetor, the combustion air may be preheated to from about 350.degree. F. to about 400.degree. F. as it enters the carburetor. When using an engine with a fuel injection system, the combustion air may be preheated from about 122.degree. F. to about 158.degree. F. as it enters the fuel injection system. The air/fuel mixture is introduced into the combustion chamber or chambers and combusted in the presence of a hydrogen-producing catalyst which facilitates the dissociation of water in the aqueous fuel into hydrogen and oxygen so that the hydrogen is combusted with the carbonaceous fuel to operate the engine. The term "hydrogen-producing catalyst" is used herein in its broadest sense. A catalyst as generally defined is a substance that causes or accelerates activity between two or more forces without itself being affected. In the present invention it is known that without this substance present in the combustion chamber, as described herein, combustion of the aqueous fuel does not take place in such a way as to produce the desired degree of power to operate the internal combustion engine. Without intending to be bound by theory, it is believed that upon generation of an electric spark in a combustion chamber with a wet atmosphere in the presence of poles formed of hydrogen-producing catalyst, the electrical discharge electrifies the mass of water present in liquid or gaseous form, e.g., steam vapor, to enable the electric charge to travel to the negatively charged catalytic poles to effect discharge of the electric charge. Dissociation of water molecules appears to occur upon exposure of the mass of water molecules to the electric charge in combination with the heat of combustion resulting from combustion of the carbonaceous material component of the aqueous fuel during the compression stroke which, along with combustion of released hydrogen, provides the power to operate the engine. Although in the presently preferred embodiment it is preferred to use two catalytic poles of hydrogen-producing catalyst, one, or more than two poles, also may be used to disperse the electric charge. In addition, although the normal spark of standard motor vehicle spark plug systems generating about 25000 to 28000 volts may be used, it is presently preferred to generate a hotter spark, e.g., generated by about 35000 volts. Electric spark generating systems are available of up to 90000 volts and it appears that higher voltages result in better dissociation of water molecules in the combustion chamber.

DETAILED DESCRIPTION OF THE PREFERRED EMBODIMENT

As indicated previously, one of the advantages of the invention is that internal combustion engines may be operated with novel fuels and fuel mixtures that require significantly less combustion air for combustion of the fuel in the engine's combustion chamber. For example, gasoline used as fuel for an internal combustion engine employing a carburetor generally requires an air to fuel ratio of 14 to 16:1 to produce satisfactory power output to operate the engine and power a motor vehicle. Alcohol, such as pure ethanol, may utilize an air to fuel ratio of 8 or 9:1 for satisfactory performance of the same engine. In contrast to such conventional fuels, the aqueous fuel of the present invention utilizes a lesser, controlled amount of combustion air. It has been determined that it is critical for the practice of the invention to employ an air to fuel ratio of not greater than 5:1 for equivalent satisfactory performance of an internal combustion engine. The preferred air to fuel ratio in accordance with the invention is from 0.5:1 to about 2:1; with an optimum air to fuel ratio in the range of 0.5:1 to 1.5:1 and, most optimally 1:1.

The reason that the aqueous fuel and the fuel mixture of the present invention can produce satisfactory internal combustion engine results is that in practicing the invention hydrogen and oxygen are released in the combustion chamber. The hydrogen and oxygen result from dissociation of water molecules and the hydrogen is combusted along with the carbonaceous fuel of the aqueous mixture. The result is that comparable engine power output is achieved with less carbonaceous fuel and less combustion air than can be achieved using conventional combustion of the same carbonaceous fuel with greater amounts of combustion air.

It is further noted that with the aqueous fuel of the present invention the water component vaporizes as steam in the combustion chamber. Steam expands to a greater extent than air and the combustion chamber can be suitably filled with less combustion air. Thus, the water component of the fuel transforms to steam which expands in the combustion chamber and replaces a portion of the combustion air used in combusting conventional fuels in the engine's combustion chamber. The expansion of the steam together with the combustion of the hydrogen released by dissociation of the water molecules results in generation of the required power output necessary for satisfactory operation of the engine.

It has been previously pointed out, that the amount of combustion air provided in the combustion chamber for combustion with the aqueous fuel of the invention must be critically controlled so that an air to fuel ratio of not greater than 5:1 is present during combustion. It has been determined that if too much air, i.e., greater than a ratio of air to fuel of 5:1, is introduced with the aqueous fuel into the combustion chamber, incomplete combustion of the carbonaceous fuel results because of the excess of oxygen in the combustion chamber. Excess oxygen over that required to combust the carbonaceous fuel results when the ratio of air to fuel is too high due to a combination of the amount of oxygen released from dissociation of the water molecules and the additional oxygen present in an excessive amount of combustion air. Incomplete combustion of the carbonaceous fuel results in unsatisfactory performance of the engine as well as excess emission of undesirable pollutants. By reducing the amount of combustion air required for combustion in the combustion chamber, less nitrogen is present in the combustion chamber to combine with oxygen and form undesirable NOX pollutants emitted during engine operation. Thus, one important advantage of the invention is the considerable reduction in NOX and other undesirable emission pollutants over that which are produced by conventionally operated internal combustion engines using conventional carbonaceous fuels such as gasoline, diesel fuel, etc. in internal combustion engines.

It is also noted that since hydrogen and oxygen and oxygen are present in the fuel mixture to be combusted in the combustion chamber of an internal combustion engine, in accordance with the invention, circumstances may arise in which too little water in the aqueous fuel would be unsatisfactory. For example, where the carbonaceous fuel has a low inherent energy output, i.e. low potential energy of BTU output per unit volume, greater amounts of water may be desirable because the release of hydrogen and oxygen by dissociation of water molecules and combustion of the hydrogen will usefully increase the total energy output of the carbonaceous fuel and water mixture. For this reason, a lower limit of between 20 and 25% water, e.g., greater than 20% water, is established as the useful, practical, minimum amount of water in the aqueous fuel mixture of the present invention so as to accommodate a greater variety of carbonaceous fuels within the scope of the invention. The upper limit of 70% to 80% water is established because a minimum amount of gaseous or liquid carbonaceous fuel is needed to initiate the reaction, triggered by a spark generated in the combustion chamber that dissociates the water molecules in the combustion chamber. It has been determined that from 30,000 BTU energy/gal. of fuel to 60,000 BTU energy/gal. of fuel is preferred for the water dissociation reaction.

The aqueous fuel of the present invention comprises water from greater than about 20 percent to about 70 to 80 percent by volume of the total volume of the aqueous fuel and, preferably, a volatile liquid carbonaceous fuel, such as a fuel selected from the group consisting of alcohols, e.g., ethanol or methanol, gasoline, diesel fuel, kerosene-type fuel, or mixtures thereof. Alcohols such as ethanol and methanol generally contain small percentages of water when produced commercially and, of course, include oxygen and hydrogen in the molecular structure. Commercial grades of ethanol and methanol are marketed in terms of a proof number, such as for example, 100 proof ethanol. One half the proof number is generally an indication of the amount of ethanol present, i.e., 100 proof ethanol contains 50 vol percent ethyl alcohol and 50 percent water; 180 proof ethanol contains 90 percent of ethyl alcohol and 10 percent of water, etc.

The aqueous fuel of the present invention is believed to be usable in all internal combustion engines, including conventional gasoline or diesel powered internal combustion engines for use in automobiles, trucks and the like, using conventional carburetors or fuel injection systems as well as rotary engines and turbine (jet) engines. The invention is believed to be useable in any engine in which volatile liquid carbonaceous fuel is combusted with oxygen (O.sub.2) in one or more combustion chambers of the engine.

Few modifications are necessary to make such engines usable with the fuel of the present invention. For example, installation of a hydrogen-producing catalyst in the combustion chamber or chambers of the engine, such as described elsewhere herein, to act as a catalyst in the dissociation of water molecules to yield hydrogen and oxygen must be made. In addition, suitable means to supply and control the input, quantity and flow, of combustion air and fuel to the combustion chamber(s) is important for optimum engine operation. It is noted in this regard that the air:fuel ratio is a significant factor in effecting combustion in the chamber(s). It is also desirable, from a practical point of view, to make the fuel supply and fuel storage systems of rust proof materials. A higher voltage electric spark system than generally used in internal combustion engines of motor vehicles operated with conventional carbonaceous fuels, e.g., gasoline, is also preferred. Systems to provide a "hotter spark" are available commercially, such as from Chrysler Motor Company. As a further modification to optimize use of the invention, it is desirable to employ a computer assisted electronically controlled system to supply fuel to fuel injectors during the intake stroke of the internal combustion engine.

The dissociation of water molecules, per se, is well known. For example, the thermo-dynamics and physical chemistry of water/steam dissociation are described in the text entitled "Chemistry of Dissociated Water Vapor and Related Systems" by M. Vinugopalan and R.A. Jones, 1968, published by John Wiley & Sons, Inc.; "Physical Chemistry for Colleges", by E.B. Mellard, 1941, pp 340-344 published by McGraw-Hill Book Company, Inc., and "Advanced Inorganic Chemistry", by F. Albert Cotton and Geoffrey Wilkinson, 1980, pp 215-228; the disclosures of which are expressly incorporated herein by reference.

Although not required for the practice of the invention, a heater to preheat the combustion air for the engine and a heat exchanger to use the hot exhaust gases from the engine to preheat the combustion air after the engine is operating, at which time the heater is shut off, may also be installed. Although the presently preferred embodiment of the invention does not require preheating combustion air and/or fuel, combustion air for the engine may be preheated before it is introduced into a carburetor or fuel injection system. When using an engine with a carburetor, the combustion air may be preheated to from about 350.degree. F. to about 400.degree. F. as it enters the carburetor. When using an engine with a fuel injection system, the combustion air may be preheated from about 122.degree. F. to about 158.degree. F. as it enters the fuel injection system. In such cases, the aqueous fuel of the present invention is introduced into the carburetor or fuel injection system and is mixed with a controlled amount of combustion air. The aqueous fuel is preferably introduced into the carburetor or fuel injection system at ambient temperatures.

In the preferred embodiment, introduced into the carburetor or fuel injection system at ambient temperatures and the air/fuel mixture is then introduced into the combustion chamber or chambers where a spark from a spark plug ignites the air/fuel mixture in the conventional manner when the piston of the combustion chamber reaches the combustion stage of the combustion cycle. The presence of a hydrogen-producing catalyst in the combustion chamber is believed to act as a catalyst for the dissociation of water molecules in the aqueous fuel when the spark plug ignites the air/fuel mixture. The hydrogen and oxygen released by dissociation are also ignited during combustion to increase the amount of energy delivered by the fuel. It has been observed in experiments using 100 proof alcohol as the engine fuel that the engine produced the same power output, i.e., watts per hour, as is produced with the same volume of gasoline. This is indeed surprising in view of the fact that the 100 proof ethanol has a theoretical energy potential of about 48,000 BTU's per gallon, with a usable potential of about 35,000 to 37,500 BTU's per gallon, as compared to gasoline, which has an energy potential of about 123,000 BTU's per gallon, nearly three times as much. The fact that the lower BTU ethanol is able to generate as much power as a higher BTU gasoline suggests that additional power is attributable to the liberation, i.e., dissociation and combustion of hydrogen and oxygen from the water.

Inasmuch as 100 proof ethanol has been found to be a satisfactory fuel in using the method of the present invention, it is apparent that other suitable fuels may be made by blending by use of other alcohols and by blending alcohols with gasoline, kerosene type fuels or diesel fuel, depending on whether the fuel is to be used in a gasoline, turbine or diesel powered engine. Experimental work also indicates that 84 proof (42 percent water) ethanol may also be used as a fuel and it is believed that aqueous fuels containing as much 70 to 80 percent water may be used.

To demonstrate one embodiment of the present invention, an engine was selected which also had the capacity to measure a predetermined workload. The engine selected was a one-cylinder, eight horsepower internal combustion engine connected to a 4,000 watt per hour a/c generator. The engine/generator was manufactured by the Generac Corporation of Waukesha, Wisconsin under the trade name Generac, Model No. 8905-0(S4002). The engine/generator is rated to have a maximum continuous a/c power capacity of 4,000 watts (4.0 KW) single phase.

A heat exchanger was installed on the engine to use the hot exhaust gases from the engine to preheat the air for combustion. A platinum bar was installed at the bottom surface of the engine head forming the top of the combustion chamber. The platinum bar weighed one ounce and measured 2-5/16 inches in length, 3/4 inches in width, and 1/16 inch in thickness. The platinum bar was secured to the inside of the head with three stainless steel screws.

A second fuel tank having a capacity of two liters was secured to the existing one-liter fuel tank. A T-coupling was inserted into the existing fuel line of the motor for communication with the fuel line for each fuel tank. A valve was inserted between the T-coupling and the fuel lines for each fuel tank so that either tank could be used separately to feed fuel to the carburetor or to mix fuels in the fuel line leading to the carburetor.

TEST RUNS

A series of tests were performed to determine if 100 proof ethanol (50% ethanol by volume, balance water) could be used in the motor which was modified as described above, and if so, to compare the performance of the 100 proof ethanol with the same amount of gasoline.

Two liters of unleaded gasoline were poured into the second fuel tank with the valve for the second tank in the closed position. Three and eight tenths liters of 100 proof ethanol were poured into the one-gallon fuel tank with the valve in the closed position. The valve for the gasoline tank was opened so that the engine could be initially started on gasoline.

Within three minutes of starting the motor, the combustion air entering into the carburetor was measured at 180.degree. F. At this point, the fuel valve under the ethanol tank was opened and the valve under the gasoline tank was closed. At that point, the temperature of the air entering the carburetor had risen to 200.degree. F.

Ethanol was now the primary fuel in the motor which exhibited a certain amount of roughness during operation until the choke mechanism was adjusted by reducing the air intake to the engine by approximately 90 percent. Immediately thereafter, two, 1800-watt, heat guns, having a rated heat output of 400.degree. F were actuated and used to heat the combustion air as it entered the carburetor. The temperature of the air from the heat guns measured 390.degree. to 395.degree. F.

After the engine ran on ethanol for approximately 20 minutes, the heat measurement in the incoming combustion air stabilized between 347.degree. F. and 352.degree. F. The engine was run on the 100-proof ethanol fuel for 40 additional minutes, for a total of one hour, until two liters of ethanol had been used. The valve under the ethanol tank was then closed and the engine was turned off by opening the choke. Eighteen hundred milliliters of ethanol were left remaining in the tank.

The choke was then reset to the 90 percent closed position, and the engine was started once again. The engine responded immediately and ran as smoothly on 100 proof ethanol as it did during the one-hour operation.

The engine was stopped and started in the same manner on three separate occasions thereafter with the same results.

While operating the engine on 100 proof ethanol, the power output on the generator was measured and indicated that the ethanol produced 36,000 watts of power during a one-hour period using two liters of ethanol having energy potential of about 48,000 BTUs per gallon.

After the engine had stopped running on ethanol, it was operated again with the two liters of gasoline in the gasoline tank. Forty-seven minutes into the test, the engine stopped because it ran out of gasoline. Measurements taken on the generator indicated that, when the engine was operated on gasoline, it was producing power at a rate of 36,000 watts per hour for 47 minutes, using two liters of gasoline having an energy potential of about 123,000 BTUs per gallon.

Comparing these power measurements indicates that two liters of 100 proof ethanol produced the same amount of power as two liters of gasoline. This is surprising inasmuch as the gasoline has about 2.5 times as many BTUs as the same amount of 100 proof ethanol. This indicates that the extra power from the ethanol must be due to the liberation and combustion of hydrogen and oxygen from the relatively large amounts of water in the fuel.

Although gasoline was used as the starter fuel to preheat the engine and, thus, generate hot exhaust gases to preheat the combustion air, the use of the gasoline as the starter fuel for preheating is not necessary and could be replaced with an electrical heat pump to preheat the combustion air until the heat exchanger can take over and preheat the combustion air, whereupon the electrical heat pump would turn off.

The above tests comparing the use of the 100-proof ethanol and gasoline were repeated on three subsequent occasions, each with the same results.

A second series of tests were run which were identical to the above, except for the use of 84 proof ethanol (42 percent ethyl alcohol and 58 percent water) in place of the 100-proof ethanol. However, after running about 30 seconds on the 84-proof ethanol, the engine stopped abruptly and released a fair amount of oil under high pressure from the main bearing in the main engine. The engine was restarted and abruptly stopped again after operating for about 20 seconds.

The above stoppage appears to have been due to preignition of the hydrogen and/or oxygen during the up-stroke period of the piston which caused pressure build-up in the crank case, which in turn forced oil under pressure through the main bearing. The pressure inside the combustion chamber appears to have been relieved through the piston rings into the crank case, and then relieved through the main bearing.

The premature ignition of the hydrogen and/or oxygen was probably caused by generating a larger amount of oxygen and hydrogen which did not occur when using 100 proof ethanol having a lesser amount of water.

The preignition problem is believed to be curable by using an engine having a shorter piston stroke to reduce the dwell time of the fuel, including hydrogen and oxygen, in the combustion chamber, or by adjusting the carburetor or the electronically controlled fuel injection system to help reducing dwell time to avoid generating excessive amount of hydrogen and oxygen. The engine used in the experiment had a relatively long piston stroke of 6 inches. For the conditions described above, the piston stroke should be no more than about 1 1/2 inches or less to avoid the preignition problem in that particular engine.

ENGINE WITH ELECTRONICALLY CONTROLLED FUEL INJECTION SYSTEM

A series of tests were run on an engine having an electronically controlled fuel injection system to determine if that would solve the preignition problem discussed above. The engine used for this purpose was a 3-cylinder turbo charge electronically controlled internal combustion engine from a 1987 Chevrolet Sprint which had been driven about 37,000 miles.

The head was removed from the motor block and cleaned to remove carbon deposits. Three platinum plates were attached to the inside of each head so as not to interfere with valves moving inside the heads during operation. Each platinum plate was 1 centimeter in length and width and was 1/32 of an inch in thickness. Each platinum plate was attached to a head with one stainless steel screw through the center of each piece. Carbon deposits were cleaned off each piston head and the engine was reassembled using new gaskets.

The combustion air intake hose which exits from the turbo and leads to the injector module was divided in the middle and attached to a heat exchanger to cool the combustion air delivered to the injector. The heat exchanger was bypassed by using two Y-junctions on either side of the heat exchanger and by putting a butterfly valve on the side closest to the turbo so that the hot air stream could be diverted around the heat exchanger and introduced directly into the injector module. All pollution abatement equipment was removed from the engine, but the alternator was kept in place. The transmission was reattached to the engine because the starter mount is attached to the transmission. The transmission was not used during the testing. This engine was inserted into a Chevrolet Sprint car having a tailpipe and muffler system so that the engine was able to run properly. The catalytic converter was left in the exhaust train, but the inside of the converter was removed as it was not needed. Two one-gallon plastic fuel tanks were hooked up to the fuel pump by a T-section having manual valves so the fuel to the fuel pumped could be quickly changed by opening or closing the valves.

TEST RUNS

A series of test runs were performed to determine how the engine as modified above would run using a variety of fuels. The first test utilized 200 proof methanol as a starter fluid. The engine started and operated when the fuel pressure was raised to 60 to 75 lbs. When using gasoline, the fuel pressure is generally set at 3.5 to 5 lbs. While the engine was running on the 200-proof methanol, the fuel was changed to 100 proof denatured ethanol and the motor continued operating smoothly at 3500 revolutions per minute (rpm). After about two minutes the test was stopped, and the engine shut down because the fuel hoses were bulging and became unsafe. These hoses were replaced with high pressure hoses and the plastic couplings and the T's were also replaced with copper couplings and T's. A new pressure gage was attached. During the testing, it was noted that the fuel mixture needed more combustion air and that the computerized settings of the engine could not be adjusted to provide the additional air. To overcome this, the air intake valve was opened. After these modifications, a new series of tests were performed using 200 proof methanol in one of two fuel tanks. The engine started on the 200-proof methanol and the rpm setting was adjusted to 3500. The engine was allowed to run for a few minutes. During that time, the fuel pressure was adjusted, and it was noted that 65 lbs. of pressure appeared to be adequate. A thermocouple was inserted close to the injector module and provided a reading of 65. degree. C. after about 5 minutes. A fuel mixture comprising 500 ml of distilled water and 500 ml of 200 proof methanol were put into the second fuel tank this fuel and was used to operate the engine. Without changing the air flow, the temperature of the combustion air rose from 65. degree. to 75. degree. C. after about 1 minute. The rpm reading dropped to 3100 rpm. The engine ran very smoothly and was turned off and restarted without difficulty.

The next step in the test series was to determine how variations in the water content of the fuel effected engine performance. Using 199 proof denatured ethanol as starter fuel, the engine started immediately. The fuel pressure setting was reduced from 65 lbs. to 50 lbs, the combustion air measured 65. degree. C., the rpm's measured 3500, and the engine ran smoothly. The fuel was then changed into 160 proof denatured ethanol. The fuel pressure was maintained at 50 lbs. The combustion air temperature was measured at 67. degree. C., the rpm's decreased to 3300, and the engine ran smoothly. After 10 minutes, the fuel was changed to 140 proof denatured ethanol. The combustion air temperature rose to 70. degree. C., the rpm's rose to 3500, and the engine ran smoothly. After 10 minutes, the fuel was changed to 120 proof denatured ethanol. The combustion air temperature increased to 73. degree. C., the rpm's decreased to 3300, and the engine ran smoothly.

After 10 minutes, the fuel was changed to 100 proof denatured ethanol. The combustion air temperature increased to 74. degree. C., the rpm's decreased to 3100, and the engine ran smoothly.
After 10 minutes, the fuel was changed to 90 proof denatured ethanol. The combustion air temperature remained at 74. degree. C., the rpm's reduced to 3100, and the engine ran smoothly.
After 10 minutes, the fuel was changed to 80 proof denatured ethanol. The combustion air temperature raised to 76. degree. C. and the rpm's reduced to 2900. At that point, an infrequent backfire was noted in the engine. 100 proof denatured ethanol was then used as the primary fuel and the bypass to the heat exchanger was closed. The combustion air temperature rose to 160.degree. C. and during the next minutes increased to 170.degree. C. The rpm's increased to 4000 rpm and the engine ran smoothly.

Another series of tests were run with the engine adjusted to operate at 3500 rpm's and with the heat exchanger removed so that neither the fuel or combustion air were preheated and thus were at ambient temperatures. The engine was started with 200 proof ethanol as the fuel and as soon as the intake air temperature at the injector module had risen to about 50. degree. C., the fuel was changed to 100 proof ethanol and the engine ran smoothly. The intake air temperature rose to 70. degree. C. where it stabilized. The engine was turned off, restarted and continued to run smoothly. By adjusting and opening the air intake, the rpm could be increased to over 4000. By slightly closing the same air intake, the rpm could be reduced to 1500. At both ranges of rpm, the engine ran smoothly and was turned off and restarted without difficulty and continued to run smoothly.

The rpm of an engine using the method and fuel of the present invention may be regulated by regulating the amount of air flow into the combustion chamber. In a conventional gasoline powered engine, the engine rpm is regulated by regulating the amount of gasoline that is introduced into the combustion chambers.

It is evident that the invention involves the use of an aqueous fuel which may comprise large amounts of water in proportion to volatile carbonaceous fuel. A particularly effective aqueous fuel comprises a mixture of approximately 70% water and 30% carbonaceous fuel. The thermal energy of the carbonaceous fuel, e.g., gasoline, is reduced from the fuels high energy value, approximately 120,000 BTU's per volume gallon in the case of gasoline, to a BTU content of approximately 35,000 BTU's per volume gallon for the 70% water, 30% gasoline mixture. This BTU content of the water/gasoline mixture is sufficient to maintain a reaction in the combustion chamber of an internal combustion engine, such that the water molecule is dissociated and the hydrogen molecule (H.sub.2) is separated from the oxygen molecule (O.sub.2) and the so produced hydrogen gas is utilized as a primary power source to move the pistons inside an internal combustion engine upon combustion. The invention is applicable with a variety of volatile carbonaceous fuels, including diesel oil or kerosene, and those fuels can be also mixed with up to 80% water (e.g., diesel or kerosene) to achieve the same reaction to dissociate hydrogen and oxygen to release hydrogen gas to power an internal combustion engine in the presence of a hydrogen-producing catalyst.

For this reaction to take effect, it is necessary to equip each combustion cavity inside the internal combustion engine with at least one, but preferably two, and maybe more, poles of hydrogen producing catalyst, with a melting point above the temperature of combustion. Useful catalysts include Ni, Pt, Pt-Ni alloys, Ni-stainless steel, noble metals, Re, W, and alloys thereof, which may be utilized as a hydrogen producing catalyst in the form of catalytic metal poles. Combustion and dissociation is initiated by a spark which may be created by a conventional electric spark generation system such as is used with conventional motor vehicle engines.

As a further examples of the invention, using fuel and combustion air at ambient temperatures I took 3 liters of unleaded gasoline (87 octane) with a BTU content of about 120,000 BTU's per gallon and 7 liters of tap water. I added 10 ml of surfactant (detergent) into this mixture in a first test to enhance mixing of the water with the gasoline. This procedure was followed to produce additional mixtures with 25 ml and 40 ml of surfactant to obtain the water/gasoline mixture. The same procedure was also followed with using tap water which was filtered through a deionization unit and charcoal filter to remove the chlorine and other impurities present in the water.

Each of the above described mixtures was then tested in a 4-cylinder, 2.5 liter internal combustion engine equipped with injectors, which were attached to a fuel rail. The fuel used during those tests was disbursed to the fuel rail through a Bosch multi-port pressure measuring device. The engine was also equipped with a fuel carburetor. The carburetor is only used for the air intake into the engine as the air/fuel ratios are substantially lower and differ with the various fuels used; for example, starting at 0.75:1 with the 50/50 water/alcohol mixture and from 1:1 to 3:1 for the 70% water/30% gasoline mixture. Normally, a gasoline engine using gasoline as fuel utilizes an air fuel ratio of 14 to 1. Such an engine is equipped with a cylinder but is changed to accept two 1/2-inch diameter nickel bolts or screws, as the hydrogen-producing catalyst, with the screw part being of 1/4 inch diameter to practice the invention. The nickel bolts were placed 1/2 inch apart on top of the piston. In another modification I placed a flat piece of aluminum (6-inches by 12-inches) inside and on top of the engine head. I drilled and tapped three 3/4-inch holes into the cover of the engine head in a horizontal position approximately 3 1/2 inches apart. I screwed some copper adapters into those holes. The adapters are connected with each other by a 3/4-inch copper pipe which was fitted into the muffler. This device carries the exhaust gas from the engine, and I have found that it is sufficient to take out water vapors (steam) from the head, otherwise the water vapor will accumulate in the engine and crankcase oil, which is not desirable.

Each of the above-mentioned fuel mixtures where tested while the engine was in neutral so as not to move the car and were found to be capable of self-starting the engine by just turning the ignition key of the car. It was not necessary to use a secondary fuel to start the engine.

The 2.5-liter engine utilized in those tests was in a standard 2,5 liter Chrysler turbo injection engine with the turbo and all smog and pollution abatement equipment removed. This engine also had a factory installed 3-speed automatic transmission with a gear ratio of 1:3.09.

The same test series as mentioned above was also performed utilizing the same internal combustion engine and car, with approximately from 20% to 25% diesel and 75% to 80% water, with the same results. Additional tests were conducted with from 20% to 25% kerosene fuel and from 75% to 80% water where like results were also obtained.

In another test series, I used a 70% water/30% gasoline emulsified mixture as the only fuel to power the engine in a test "City Car", which I developed for testing purposes. This car is a 4 door, 5 passenger front wheel drive car with a net weight of 2,500 pounds. In tests I was able

to drive this car with the above-mentioned fuels from 0 to 60 miles per hour in about 6 seconds. I tested the car to a top speed of 75 miles per hour, but the car could be driven substantially faster.
As discussed above, I have also determined that it is important to control the air to fuel mixture to obtain optimum results. In one test, I ran a 14:1 air fuel ratio, the same as conventionally used with gasoline, and this resulted in an incomplete combustion within the engine and large amount of water and fuel mixture exiting the tail pipe. The same occurred using an air to fuel mixture of 7:1. These tests were conducted using water and gasoline at a 70% to 30% mixture, water and diesel at a 75% to 25% mixture and water and kerosene at a 75% to 25% mixture. The incomplete combustion began to subside to satisfactory levels with air to fuel ratios of 3:1 or less. Outer limits and optimum properties are easily determined for any given aqueous fuel mixture using the procedure described above but the air to fuel ratio should not exceed 5:1.

I have also found that a wetting agent or surfactant may be desirable. One such agent which has proved to be useful has a trade name of Aqua-mate2 manufactured or distributed by Hydrotex in Dallas, Texas. Obviously, other wetting agents available commercially that help disperse carbonaceous fuels in water are also usable. I additionally conducted tests on all three above described fuels using 50% water and 50% carbonaceous fuel, e.g., oil-based fuel, which was adequately dispersed in the water. These tests also allowed the engine to run very satisfactorily.
Another car test is in progress using 50% water and 50% alcohol, with an energy content of 35,000 BTU's per gallon. Test results of 20 miles per gallon of actual driving have been achieved. With proper fuel management in the engine, efficiency can be effectively increased significantly upwards to 30 miles per gallon or more.

The benefits of the invention are substantial since about a 70% reduction of air pollutants is obtained with a total elimination of NOX. There is also a 70% reduction of the fuel price to drive a vehicle through reduction in the amount of gasoline used. Furthermore, there are other substantial advantages; such as possible reduction of elimination of need for oil imports.

Other gaseous or liquid carbonaceous fuels may be used, including gaseous fuels such as methane, ethane, butane or natural gas and the like which could be liquified and substituted for ethanol and methanol as used in the present invention, or used in gaseous form.

The present invention could also be used in jet engines, which is another form of internal combustion engine.

3.6.1.3. Meyer Stanley

He was eating dinner at a Grove City OH restaurant, when it is reported that he jumped up from the table, yelled that he'd been poisoned", and rushed out into the parking lot, where he collapsed and immediately died on March 21, 1998.

There were also those who were initially curious about Meyer's work, such as the editor of the magazine, “ Infinite Energy” 19; 50-51 (1998), Mr. Eugene Mallove, he was also later on murdered in Norwich, CT on 14 May 2004, similar the late Christopher Tinsley of the UK, and the late Admiral of the British Navy, Sir Anthony Griffin, both in an unknown cause of death, but it is evident, both became frustrated by being unable or, more to the point, not allowed, to confirm Mr. Meyer's claims.

Stanley A. Meyer, a Ohio inventor who had claimed his technology could produce a hydrogen-oxygen mixture with a minimal energy input (compared with conventional electrolysis).

In lifetime, he had gained a world-wide following of adherents and people who had invested in his activities --- Water Fuel Cell (Grove City, OH). He was famous for his claimed "water fueled car" which was exhibited symbolically in the BBC/CBC 1994 documentary on cold fusion, "Too Close to the Sun".

Eye-witness accounts suggest that US inventor Stanley Meyer has developed an electric cell which will split ordinary tap water into hydrogen and oxygen with far less energy than that required by a normal electrolytic cell.

In a demonstration made before Professor Michael Laughton, Dean of Engineering at Mary College, London, Admiral Sir Anthony Griffin, a former controller of the British Navy, and Dr. Keith Hindley, a UK research chemist. Meyer's cell, developed at the inventor's home in Grove City, Ohio, produced far more hydrogen/oxygen mixture than could have been expected by simple electrolysis.

Where normal water electrolysis requires the passage of current measured in amps, Meyer's cell achieves the same effect in milliamps. Furthermore, ordinary tap water requires the addition of an electrolyte such as sulphuric acid to aid current conduction; Meyer's cell functions at greatest efficiency with pure water.

According to the witnesses, the most startling aspect of the Meyer cell was that it remained cold, even after hours of gas production.

Meyer's experiments, which he seems to be able to perform to order, have earned him a series of US patents granted under Section 101. The granting of a patent under this section is dependent on a successful demonstration of the invention to a Patent Review Board.

Meyer's cell seems to have many of the attributes of an electrolytic cell except that it functions at high voltage, low current rather than the other way around. Construction is unremarkable. The electrodes --- referred to as "excitors" by Meyer --- are made from parallel plates of stainless steel formed in either flat or concentric topography. Gas production seems to vary as the inverse of the distance between them; the patents suggest a spacing of 1.5 mm produces satisfactory results.

The real differences occur in the power supply to the cell. Meyer uses an external inductance which appears to resonate with the capacitance of the cell --- pure water apparently possesses a dielectric constant of about 5 --- to produce a parallel resonant circuit. This is excited by a highpower pulse generator which, together with the cell capacitance and a rectifier diode, forms a charge pump circuit. High frequency pulses build a rising staircase DC potential across the electrodes of the cell until a point is reached where the water breaks down and a momentary high current flows. A current measuring circuit in the supply detects this breakdown and removes the pulse drive for a few cycles allowing the water to "recover".

Research chemist Keith Hindley offers this description of a Meyer cell demonstration: "After a day of presentations, the Griffin committee witnessed a number of important demonstration of the “WFC" (water fuel cell as named by the inventor).

A witness team of independent UK scientific observers testified that US inventor Stanley Meyer successfully decomposed ordinary tap water into constituent elements through a combination of high, pulsed voltage using an average current measured only in milliamps. Reported gas evolution was enough to sustain a hydrogen /oxygen flame which instantly melted steel.

In contrast with normal high current electrolysis, the witnesses report the lack of any heating within the cell. Meyer declines to release details which would allow scientists to duplicate and evaluate his "water fuel cell". However, he has supplied enough detail to the US Patent Office to persuade them that he can substantiate his 'power-from-water' claims.

One demonstration cell was fitted with two parallel plate "excitors". Using tap water to fill the cell, the plates generated gas at very low current levels --- no greater than a tenth of an amp on the ammeter, and claimed to be milliamps by Meyer --- and this gas production increased steadily as the plates were moved closer together and decreased as they were separated. The DC voltage appeared to be pulsed at tens of thousands of volts.

A second cell carried nine stainless steel double tube cell units and generated much more gas. A sequence of photographs was taken showing gas production at milliamp levels. When the voltage was turned up to its peak value, the gas then poured off at a very impressive level.

"We did notice that the water at the top of the cell slowly became discolored with a pale cream and dark brown precipitate, almost certainly the effects of the chlorine in the heavily chlorinated tap water on the stainless-steel tubes used as "excitors".

He was demonstrating hydrogen gas production at milliamp and kilovolt levels.

"The most remarkable observation is that the WFC and all its metal pipework remained quite cold to the touch, even after more than twenty minutes of operation. The splitting mechanism clearly evolves little heat in sharp contrast to electrolysis where the electrolyte warms up quickly."

"The results appear to suggest efficient and controllable gas production that responds rapidly to demand and yet is safe in operation. We clearly saw how increasing and decreasing the voltage is used to control gas production. We saw how gas generation ceased and then began again instantly as the voltage driving circuit was switched off and then on again."

"After hours of discussion between ourselves, we concluded that Stan Meyer did appear to have discovered an entirely new method for splitting water which showed few of the characteristics of classical electrolysis. Confirmation that his devices actually

"The basic WFC was subjected to three years of testing. This raises the granted patents to the level of independent, critical, scientific and engineering confirmation that the devices actually perform as claimed."

The practical demonstration of the Meyer cell appears substantially more convincing than the para-scientific jargon which has been used to explain it. The inventor himself talks about a distortion and polarization of the water molecule resulting in the HOH bonding tearing itself apart under the electrostatic potential gradient, of a resonance within the molecule which amplifies the effect.

Apart from the copious hydrogen/oxygen gas evolution and the minimal temperature rise within the cell, witnesses also report that water within the cell disappears rapidly, presumably into its component parts and as an aerosol from the myriad of tiny bubbles breaking the surface of the cell.

Meyer claims to have run a converted VW on hydrogen/oxygen mixture for the last four years using a chain of six cylindrical cells. He also claims that photon stimulation of the reactor space by optical fiber piped laser light increases gas production.

The inventor was a protégée' of the Advanced Energy Institute.

All this US patents are granted to Mr. Meyer:

20.07.1976 USP # 3,970,070 - Solar heating system
05.05.1981 USP # 4,265,224 ~ Multi-Stage Solar Storage System
30.06.1981 USP # 4,275,950 ~ Light-Guide Lenses
28.06.1983 USP # 4,389,981 ~ H Gas Injector System for IC Engine
20.12.1983 USP # 4,421,474 ~ H Gas Burner
14.08.1984 USP # 4,465,455 ~ Start-up/Shut-down for H Gas Burner
23.09.1986 USP # 4,613,779 ~ Electrical Pulse Generator
23.09.1986 USP # 4,613,304 ~ Gas Electrical H Generator
17.01.1989 USP # 4,798,661 - Gas generator voltage control circuit
02.05.1989 USP # 4,826,581 - Controlled Production of Thermal Energy from Gases
26.06.1990 USP # 4,936,961 - Method for the Production of a Fuel Gas

Canada Patents:

CP # 1,231,872 ~ H Injector System
CP # 1,233,379 ~ H Gas Injector System for IC Engine
CP # 1,235,669 ~ Controlled H Gas Flame
CP # 1,228,833 ~ Gas Electrical H Generator
CP # 1,227,094 ~ H/Air & Non-Combustible Gas Mixing Combustion System
CP # 1,234,774 ~ H Generator System
CP # 1,234,773 ~ Resonant Cavity H Generator.
CP # 1,213,671 ~ Electrical Particle Generator

4.0.0.0. Cottell Eric C.

Private Rd., Bayville, NY 11709
First some interesting articles in Journals above Mr. Cottel’s inventions:

4.0.0.1. Newsweek (June 17, 1974); A Solution to Air Pollution

In the wake of the energy-crisis a 50-year-old British-born inventor named Eric Cottell has come up with an ingeniously simple and economically practical solution -- one that is now exciting industry and government officials alike.

In the conventional combustion process, fuel is combined with air and turned. The result is carbon dioxide, water vapor and heavy oxides of nitrogen, which are a prime cause of chemical smog. Cottell reasoned that if water could largely replace air as a source of oxygen in combustion, this would avoid the large amounts of nitrogen introduced by the air -- and thus eliminate much of the noxious nitrogen oxides.

To accomplish this, he turned to a device he had patented 22 years ago -- an ultrasonic reactor that emulsifies heavy liquids and is widely used today to prepare such products as Worcestershire sauce, ketchup, cosmetics and paint. By refining the reactor, Cottell was able to break water into particles about one fifty-thousandth of an inch in diameter and to disperse them evenly in oil (or gasoline) to create an emulsion that was 70 percent oil and 30 percent water. When this emulsion was burned, Cottell found :
(1) that there were far fewer waste products and

(2) that the small water droplets expand on heating, then explode into steam, in turn shattering the oil into even finer particles, and thus increasing the surface area of the fuel exposed for burning.

Last month Cottell divided his time between Washington, in talks with officials of the Federal Energy Office, and Detroit, where he consulted with engineers working to meet the tight 1976 automobile-emission requirements. So far, auto tests have shown that with an ultrasonic reactor attached to a carburetor, a car can get almost DOUBLE the normal miles per gallon of gasoline -- with neglible exhausts. Cottell's company, Tymponic Corp. of Long Island, N.Y., is also about to produce units for home oil burners that will be no larger than a flashlight and cost $100 to $150.
Last winter, two Long Island schools converted to Cottell's system, and both reduced their fuel usage by about 25%. Adelphi University reports that it saved more than 3,500 gallons of oil per week! -- and reduced soot output by 98 %."

4.0.0.2. Popular Mechanics (November 1972); "A Furnace That ‘Burns’ Water"

by John F. Pearson
A revolutionary combustion system makes it possible to ‘burn’ emulsions of fuel and water. It works in a car engine as well as an oil furnace – and cuts pollutants, too.
It’s impossible. An oil burner simply can’t run on a fuel that is one-third water -- tap water, at that. But I recently saw it done.
The demonstration was at the Bayville, NY home of Eric C. Cottell, a British-born engineer and inventor. The gadget that made the "impossible" happen is a Cottell invention called the

Ultrasonic Reactor -- a device resembling a long, slim electric motor. It contains a crystal stack at one end and a mixing chamber at the other.

When a 60-cycle current is applied, the crystals vibrate at 20,000 cycles per second, turning the reactor into a "super-blender". As shown in the diagram, oil and water (70% oil, 30% water) flow into the reactor, where a terrific vibrating force causes water and oil molecules to rupture. The two liquids form an emulsion in which tiny particles of water are dispersed throughout the oil. When this happens, says the inventor, the surface area of the water is increased millions of times. Thus, when the emulsion hits the furnace’s combustion chamber, the water "explodes" into superheated steam, adding to the energy outputs of the oil.

In hundreds of tests of his system, Cottell has found that ordinary boilers run at efficiencies close to 100% -- as astounding result that neither he nor leading combustion experts can explain. In the demonstration I saw, gauges indicated that the emulsion produced the same amount of heat as a 100% oil fuel.

In addition to stretching fuel, the system reportedly produces fewer pollutants than standard oil combustion. The fact that one-third less oil is burned is a key anti-pollution factor.
Though Cottell sees many potential applications for the reactor -- in auto, ship and plane engines, for example -- he thinks the best immediate application is in heating plants of large apartment buildings.

"This is by far my most exciting invention", says Cottell, who holds patents in the fields of ultrasonic, hydraulics, and chemistry.

Eric Cottell - was one of the pioneers of ultrasonic fuel systems. This involved using sonic transducers to 'vibrate' existing fuels down to much smaller particles, making it burn up to 20% more efficiently. Cottell then went on to discover that super fine S-ionized water could be mixed perfectly with up to 70% oil or gas in these systems, this was followed by much publicity (e.g. Newsweek, June 17,1974).

The emulsion of 70 % fuel and 30 % water produces the same amount of heating. Combustion results is extremely clean.

Use of an ultrasonic reactor that emulsifies heavy liquids and is widely used to prepare such products as Worcestershire sauce, ketchup, cosmetics and paint.

By refining the reactor, Cottell was able to break water into particles about 1/50'000 of an inch in diameter and to disperse them evenly in oil (or gasoline). When this emulsion was burned, Cottel found

(1) that there were far fewer waste products

(2) that the small water droplets expand on heating, then explode into stem, in turn shattering the oil into even finer particles, and thus increasing the surface area of the fuel exposed for burning.

Auto tests have shown that with an ultrasonic reactor attached to a carburetor, a car can get almost double the normal miles per gallon of gasoline – with neglible exhausts.

Cottell’s company, Tympoinic Corp. Of Long Island, N.Y., is also about to produce units for home oil burners that will be no larger than a flashlight and cost $ 100 to $150.

During winter 1973 two long Island schools converted to Cottell’s system, and both reduced their fuel usage by about 25%.

Adelphi University reports that is saved more than 3'500 gallons of oil per week! – and reduced soot output by 98 percent.

4.0.0.3. Production of fuel; US #: 4,377,391; Mr. Cottel;

The production of fuel comprising an emulsion of coal particles, oil and water or a dispersion of coal and oil in which pyrites, ash and other impurities are removed from the coal particles and the particles reduced in size by forming a slurry of contaminated coal particles and water and exposing that slurry to violent sonic agitation to cause the impurities to be detached from the coal particles and the particles to be reduced in size. The coal and impurities are thereafter separated, and the coal subsequently incorporated into a fuel. The process may also be used to separate other minerals which are bonded mechanically as distinct from chemically, to each other.

This is a continuation of application Ser. No. 915,854, filed June 15, 1978, now abandoned.

BACKGROUND OF THE INVENTION

This invention is concerned with the separation of discrete minerals which are bonded together mechanically rather than on a molecular basis. The invention is particularly but not necessarily exclusively concerned with the separation of pyrites, ash and other impurities from coal in the production of a fuel comprising coal particles, oil and water. A fuel of the kind with which the invention is concerned is described in my U.S. Pat. No. 3,941,552 issued Mar. 2, 1976. In that patent the problems of contamination of the coal is discussed and it is proposed that there be incorporated into the fuel a quantity of lime to reduce objectionable emissions when the fuel is burned. The present invention is specifically directed to the removal, prior to combustion, of impurities contaminating the coal such as, for example, pyrites and ash forming constituents. The present invention additionally is concerned with the diminution of particle size prior to the incorporation of the particles into the fuel.

SUMMARY OF THE PRESENT INVENTION

The present invention provides a method of separating particulate discrete minerals bonded together mechanically by making a slurry of the particles and subjecting the resultant slurry to such intense vibrating action as to produce cavitation within the slurry and the separation of the different components of the particles. From another aspect, the present invention provides a method for producing fuel which comprises a mixture of coal, oil and water which method includes the step of mixing particles of coal and impurities with water to form slurry, exposing that slurry to such violent agitation as to cause cavitation so that the impurities are detached from the coal part of the particles. The method also includes the step of separating the detached impurities from the remaining coal constituents of the particles, and using those impurities as a by-product, for example, in the production of aggregates. The cleaned coal, if appropriate, after adjusting the water content of the resultant mixture of water and coal, is then mixed with oil and the mixture of coal, oil and water is treated to form an emulsion. Most desirably the treatment of the coal, oil and water to produce an emulsion is that described in my aforementioned patent. The resultant fuel can then be burned to produce energy as described, for example, in my aforementioned patent or as described in my co-pending application Ser. No. 873,301 filed Jan. 30, 1978.

The agitation of the slurry of coal and water is most desirably effected sonically and the slurry is exposed to an energy density of at least 3 watts per cm.sup.2 but in any event sufficient energy density in combination with a suitable frequency to cause cavitation and related to the range of particle size being treated.

DESCRIPTION OF THE DRAWINGS

The single FIGURE in the drawings is a flow chart showing the process part of the invention.

DESCRIPTION OF THE PREFERRED EMBODIMENT

In the process according to the invention, coal and water are delivered to an impact mill 10 or to some other appropriate grinding apparatus. Alternately, and as indicated in the chain line in the flow chart, coal may be delivered to an impact mill 10a and water is added to the coal particles exiting impact mill 10a as, for example, at 12 to form a slurry. The slurry exiting mill 10 or that produced by the addition of water to the particles exiting mill 10a, is delivered to a tank 14 within which the slurry is subject to violent agitation in this particular embodiment by irradiating the slurry with sonic energy. The sonic vibrations may be generated by known techniques, and particularly desirably the vibrations are generated by the utilization of equipment similar to that described in my aforementioned patent. Using a typical particle size of 50 to 100.mu. the suitable vibrations have been found to have a frequency of between 500 and 50,000 Hz and amplitudes ranging from about 2.times.10.sup.4 to about 10.mu.. The energy density should be of an order sufficient to produce effective cavitation within the volume of the slurry. It will be recognized that, dependent upon the density and other characteristics of the slurry particularly the physical characteristics of the coal particles, the energy requirements will vary.

The slurry is exposed to that radiation which will produce detachment of impurities bonded to the coal components of the particles and will simultaneously produce diminution of the particle size.

From the tank 14 the water and the coal and impurity components of the particles are delivered to a separation unit 16 in which the coal, pyrites and other impurities are separated. The denser impurities such as iron pyrites and silica are removed from the unit 16 as at 18 to be discarded or to be utilized in the manufacture of other products.

From unit 16 relatively pure coal and water is delivered to a dewatering unit 20 effective to reduce the quantity of the water in the slurry for further processing such as in my U.S. Pat. No. 3,941,552 or for feed stock, burning or other purposes.

When processed according to the teachings of my earlier patent oil is added at input 22 to the mixture being delivered along line 24 that oil being added in an amount equal to about 60% by weight of the coal. The resultant mixture of coal, oil and water is then delivered to a sonic treatment chamber 26 which conveniently is of the kind described in my aforementioned patent where the mixture is subject to violent agitation to produce cavitation and to produce a virtually stable emulsion.

It will be recognized that the particular form of the various components described here above may be varied to suit particular environments and in particular the mechanical mills, the de-watering and mineral separation the units may take any of a number of forms since the particular forms of those items, per se, do not constitute a part of the present invention.

It will be recognized that in certain instances after the contaminants have been separated from the coal, the coal may be dried thoroughly and mixed with oil to form a dispersion of coal and oil.

4.0.0.4. Combustion Method and Apparatus Burning an Intimate Emulsion of

Fuel and Water; US #: 3,749,318; July 31, 1973; US Cl. 239/102; Mr. Cottell;

Abstract

A combustion apparatus and process in which a water-in-oil emulsion of liquid fuel, such as liquid hydrocarbons, containing from 10 to 50 % water, the emulsion being produced without any substantial emulsifying agent and preferably by sonic agitation, is burned.

The combustion of liquid fuel, such as liquid hydrocarbons, is a standard method of power and/or heat generation. The combustion may be in a system where the heat is transferred to another medium, such as water, with or without boiling the water, or the fuel may be burned in various types of internal combustion engines, such as those operating on Otto, diesel, or other cycle. The amount of oxygen, usually air, is at least about theoretically sufficient for complete combustion of the fuel elements.

Considerable problems have arisen. If there is a very large excess of oxygen, the efficiency of the combustion process is lowered because a considerable amount of the air, including inert nitrogen, has to be heated up. In the case of an internal combustion engine, operating with excessive amounts of oxygen can result in slow combustion, which can overheat and burn out exhaust valves. If the combustion is with amounts of oxygen and fuel more nearly in balance, for example with only a small excess of oxygen, problems arise with incomplete combustion. This can result in excessive amount of carbon monoxide and/or incompletely burned fuel, which may show up as unburned hydrocarbons, soot and the like. Incomplete combustion lowers the combustion efficiency and can also contaminate the equipment. In the case of internal combustion engines, unburned hydrocarbons, carbon monoxide, and oxides of nitrogen, generally symbolized by the formula NOx, are serious atmospheric pollutants as they give rise to photochemical smog and the like. Contamination of NOx from an IC engine usually results when combustion temperature is high.

It has been proposed in the past to introduce streams of water into a burner or to inject water into an internal combustion engine as it operates. This has proven to reduce somewhat incompletely burned fuel deposited in the form of carbon, and in the case of IC engines this can lower NOx production and also in certain cases, such as aircraft piston engines, permit operating for short times at higher power outputs with very rich mixtures which would otherwise burn up the engine. Water injection, however, has serious drawbacks. In the first place, it is very difficult to control relative amounts of water and fuel precisely. Even if the control is maintained to a satisfactory degree, efficiency drops because the water has to be vaporized, with its extremely high latent heat, and heated up in the combustion, which takes further power because of the high specific heat of water vapor. As a result, water injection has only bee practically used in unusual circumstances.

Summary of the Invention

The present invention burns an extremely fine emulsion of water and liquid fuel, normally hydro carbonaceous fuel, in which the water droplets are dispersed in an extremely fine average particle size. While the present invention is not absolutely limited to the method by which the emulsion is carried out, it is preferred to emulsify by using an ultrasonic probe or other device which agitates the fuel and water to produce an extraordinarily finely dispersed emulsion, because it is the fine dispersion that produces the important new results which will be set out below; mere presence of the water does not.

According to the present invention, if a very fine emulsion is burned, which may have from about 10% to as much as 50% water, extremely clean combustion results, contamination and pollution are minimized, and in a straight atmospheric burner up to 30% of water will give results in which the heat obtained by the combustion is substantially the same as if all hydrocarbon fuel were burned. In other words, with 70% fuel and 30% water, the emulsion will produce the same amount of heating. This surprising result has been repeatedly tested, and while I do not want to limit the present invention to any particular theory, it seems probable that the combustion of the emulsion is so complete that the smaller amount of fuel is completely burned and the same final heat is obtained as if there were no water present. The above statements are made with respect to a system in which the surfaces which are heated are at a sufficiently high temperature so that water vapor does not condense. In other words, no part of the new result is due to condensation of water vapor on cooler surfaces. In the case of the application to an IC engine, not only are the surfaces hot but the exhaust gases leave the engine cylinder greatly above the condensation point of water vapor.

In the IC engine modification of the present invention, while the total amount of power may be as great or, under certain circumstances, even greater, the peak flame temperature is usually lower, and it seems probable that the reduced emission of NOx results primarily from this factor. However, this is not known, and the water vapor present in larger amounts as compared to carbon dioxide may also play a part. Therefore, it is not intended to limit the invention to any particular theory, and the above statements are made because I think the factors mentioned are at least some, and conceivably the only, factors involved.

The invention is not limited to the time in the whole operation when the very fine water-in-oil emulsion is actually produced. This may be at the point where atomization takes place just prior or at the point of ignition. This, however, is not necessary, and the emulsion may be performed and conveyed to the burner nozzle in a preformed state. Particularly with the referred emulsions obtained by sonic agitation, the emulsion is quite stable and so it can be produced at a point remote from the actual burner itself, and such a modification is of course included. It is also possible to have the emulsion formed by flowing water and oil over the emulsifying point, so that the emulsion is formed at the same place, or practically at the same place, as atomization into the flame takes place. In the case of the use of sonic atomization, particularly for IC engine use, it is almost always preferable to have the streams of water and fuel unite just prior to the point of atomization. It is possible, of course, to feed to the sonic atomizer an already formed emulsion, but this requires a separate step and the results are not significantly better. Therefore, particularly in the case of sonic atomization for combustion, and even more particularly in the case of IC engines, it is generally preferred to have the emulsion formed at the point and as a part of the atomization or atomizing device.

It is an important advantage of the present invention that it is not necessary to use any emulsifying agent, particularly when sonic emulsification is used. This eliminates the added step and, therefore, cost of the emulsion is reduced, although in a broader aspect the present invention does not exclude an emulsion which has been made in the presence of a small amount of an emulsifying agent, such as a small amount, usually a fraction of a percent, of a diallyl sulfosuccinate or other well known emulsifying agent capable of facilitating the formation of water-in-oil emulsions. The invention in this aspect, which is normally not preferred, may use any known emulsifying agent.

Ordinarily more problems are presented with the burning of heavy residual fuel oil, and this frequently requires steam heating. In the case of the present invention, however, the heavy oil emulsifies more readily than light oil, and when emulsified with a considerable amount of water, the viscosity is low enough so that it can be burned without preheating. This is an additional advantage for use with heavier oils. Why the heavy oil emulsifies more readily and to a lower viscosity has not been fully determined. It is possible that the heavy fuel oil contains contaminants which aid in the emulsification which are not present in the purer lighter fuel oils. It is not intended, however, to limit the present invention to any theory of action.

While, as has been stated, the invention is not limited to any particular method, sonic emulsification is greatly preferred. It produces emulsions of maximum fineness at very low costs, and so in one further aspect of the invention there is included the combination of forming ultrasonically a fine water-in-oil emulsion and then introducing this into a burner.

Brief Description of the Drawings

Figure 1 shows, in diagrammatic form, a sonic emulsifier and burner;

FIG. I

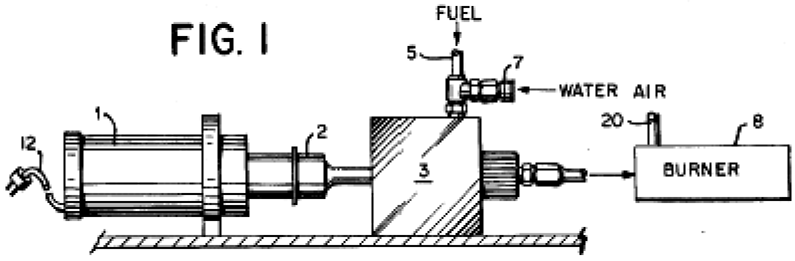

Figure 2 is a detail on a somewhat enlarged scale, partly in section, of the emulsifier;

FIG. 2

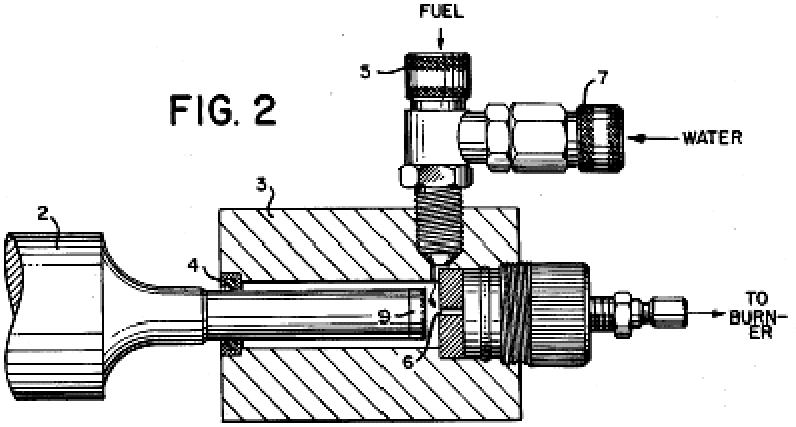

Figure 3 is a semi-diagrammatic illustration of a combined sonic atomizer and emulsifier, especially useful with internal combustion engines;

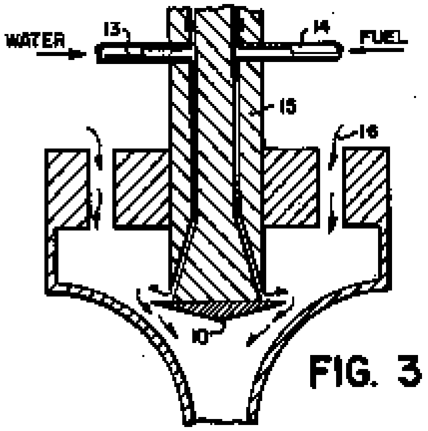

FIG. 3

Figure 4 is an illustration of a unitary emulsifier and furnace burner, particularly for larger units, and

FIG. 4

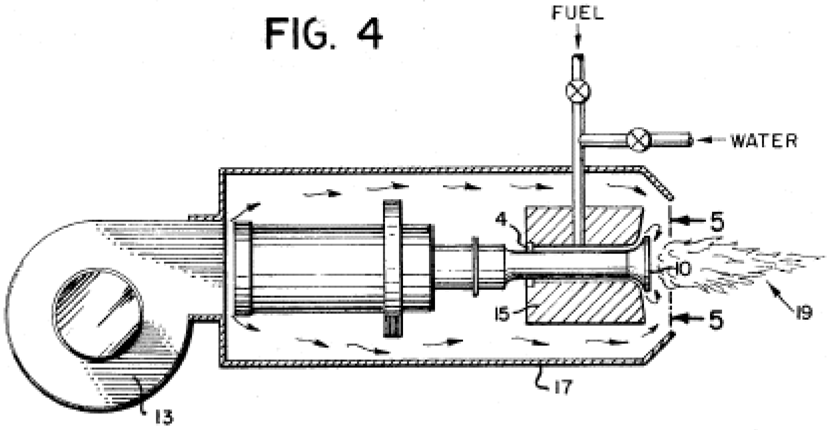

Figure 5 is a horizontal elevation detail of the expanded plate at the end of the probe.

FIG. 5

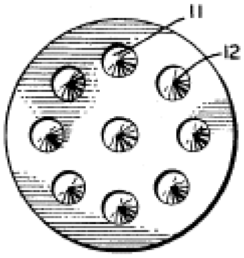

Description of the Preferred Embodiments

In Figure 1 a sonic generator 1 is shown powering a sonic probe 2 in the form of an acoustic transformer, the end 9 of which extends into a chamber 3 through a flexible seal 4 located substantially at a nodal point of the sonic probe. A stream of fuel, such as house heating fuel oil, is introduced through a conduit 5 and a stream of water joins it through a conduit 7 with a fail safe valve 18 opened by fuel pressure. These two streams strike the vibrating end 9 of the sonic probe, as can best be seen in Figure 2 where a portion of the chamber 3 is shown in section. The violent sonic agitation emulsifies the two streams, which then leave axially through an outlet conduit 6 in a plate 10 which is located closely adjacent to the vibrating end 9 of the sonic probe. From the outlet conduit 6 the emulsion passes into a convenient burner 8 in a combustion chamber (not shown). Air is introduced at 20 and a flame results. While the proportion of fuel and water can vary over a wide range, for example from about 10 % water to about 50 % water, a very suitable mixture is about 70 % fuel and 30 % water.

The sonic probe 2 is of conventional design with a stack of piezoelectric plates (not shown), which are energized through cable 12 by a suitable high frequency oscillator (not shown), which may operate, for example, at a frequency of approximately 20,000 Hz. The plate 9 at the end of the sonic probe 2 may be a flat plate or it may also be provided with a suitable baffle, for example a spiral baffle, to extend the period of residence in the violent agitation field. The sonic generator illustrated diagrammatically is of common a commercial type sold by the Branson Instruments under their trade name Sonifier. The particular design of the sonic emulsifier ahs nothing to do with the present invention and the illustration shows merely a typical one.

Figures 4 and 5 illustrate a unitary emulsifier and burner for furnace use. The same elements are given the same reference numbers as in Figures 1 to 3. The end of the Sonifier tip if of the general shape shown in Figure 3m which will be described further below, and the parts bear the same reference numbers there as in Figure 3. It will be seen that in Figure 4 there is an overall housing through which a blast of air passes from the blower 13. This air flows over the ultrasonic generator, thus cooling it, which is desirable in a large sized burner, and finally passes over the end of the housing 15. The fuel and water streams flow into an annular space between the housing 15 and the Sonifier probe. The latter is provided with an end plate 10 which has a series of small annular depressions 11 with a central projection 12 forming the inside of the annulus. This can be seen in Figure 5. The clearance between the end of the housing and the plate 10 is quite narrow and is shown somewhat exaggerated in Figure 4 for the sake of clarity. A film of fuel and water flows over the plate, where it is emulsified and atomized and thrown some distance to the right, forming a flame, which is diagrammatically shown at 19.

Combustion results in a boiler were measured in relative times to bring the water in the boiler jacket from a particular temperature to a temperature just below its boiling point. The test accurately measures the relative heating efficiencies and is shown in the following table, which illustrates the results of 8 tests, test 1 to 5 being with straight No. 2 domestic heating oil and tests 6, 7, and 8 with a mixture of 70% oil and 30% water.

Temperature (1) ~ Temperature (2) ~ Time (min) ~ Material
1. 150 ~ 192 ~ -- ~ Oil
2. 150 ~ 194 ~ 4-13 ~ "
3. 146 ~ 194 ~ 4-14 ~ "
4. 144 ~ 192 ~ 4-6 ~ "
5. 144 ~ 194 ~ 3-40 ~ "
6. 146 ~ 194 ~ 3-30 ~ 600 oil/325 water
7. 144 ~ 192 ~ 4-20 ~ 850 oil/200 water
8. 144 ~ 196 ~ 4-16 ~ 800 oil/250 water

Boiler surfaces were carefully examined in the tests and were clean. A flame was produced which was whiter; there was no visible smoke from the chimney, and stack gas analysis showed a more complete and perfect combustion.

Figure 3 illustrates a modification particularly useful for IC engines. The Sonifier with its probe carry the same reference numerals as in Figures 1 and 2, but, as in Figures 4 and 5, the shape of the end of the probe is a little different, being expanded out into a plate 10. The plate is flat instead of provided with annular depressions as in figure 4. Gasoline was introduced through the conduit 14 into an annular space between the probe and a housing 15, and water was introduced through conduit 13. The two liquids flow down until they come to the edge of the expanded plate 10, where they proceed to flow along the top of the plate and are atomized and emulsified at the same time. Air is introduced adjacent the atomized emulsion through an air conduit 16 and the resulting mixture is fed into the manifold of an internal combustion engine (not shown).

The plate 10 projects beyond the housing, the clearance between housing and Sonifier being exaggerated as in Figure 4, and the violent sonic agitation of the pate throws a finely divided emulsion up from the upper surface of its projection. As Figure 3 is designed to connect with a manifold of an IC engine, there will usually be a certain amount of vacuum, and this causes the emulsion to be pulled around the edge pf the plate, as is shown by the arrows. Thorough mixing of the air takes place, but it is not necessary that the emulsion be thrown by sonic vibration into the manifold, whereas in Figure 4 with the horizontal burner this is necessary so that the fine emulsion atomized in the blast of air moves horizontally to form the burner flame. It is for this reason that the actual contact of the plate with the film of fuel and water flowing over it is on its forward face so that it will be thrown in the direction to form the burner flame, for of course in an ordinary burner there is not the vacuum which exists in an internal combustion engine manifold.

Figures 3 and 4 and 5 illustrate different forms of Sonifier and emulsion forming plate, but the invention is not limited to the exact shapes shown nor for that matter to the flat tip face as shown in Figure 2. These are simply illustrations of typical configurations, but the invention is not limited to the details thereof.

The IC engine fed with a gasoline and water emulsion atomized into the air ran with the same power as on straight gasoline, and pollutants were reduced, unburned hydrocarbons practically zero, and NOx still more reduced. The figures illustrate the pollutant concentrations, the engine running at about 5000 rpm under load. It will be noted that the pollutant concentrations are far below present emission standards and even meet more rigid standards proposed for later years. Carbon monoxide 0.94, unburned HC 0.0, NOx 11.35 ppm.

4.0.0.5. Burning Water-in-Oil Emulsion Containing Pulverized Coal

US #: 3,941,552; March 2, 1976; US Cl. 431/1; Mr. Cottel;

Pulverized coal is slurred with water then oil or if desired oil and pulverized alkalis preferably lime or limestone is added and the mixture subjected to sonic vibrations with an energy density of at least 11.625 watts per cm.sup.2. Liquid suspension is produced and any excess water or oil separates out as a separate phase. Normally excess oil is used and the excess oil phase can be recycled. The resulting dispersion is utilized and burned in a furnace. A clean flame is produced which has the characteristics of an oil flame and not a powdered coal flame. The addition of lime is optional as its purpose is to reduce sulfur dioxide in burning where the coal contains sulfur. If there is no sulfur or so little as to meet environmental standards the addition of lime may be omitted. The amount of lime is preferably at least about twice stoichiometric based on the sulfur content of the coal. Up to 80% of sulfur dioxide produced on burning can react with the lime and the calcium sulfate produced removed by conventional particle separators.

BACKGROUND OF THE INVENTION

Coal is usually burned either in a bed or if pulverized and atomized in the form of fine particles. When the coal contains substantial amounts of sulfur this is transformed into oxides of sulfur, mostly sulfur dioxide, during combustion. Sulfur oxides constitute serious atmospheric pollutants and in recent years quite stringent standards have been set in the United States for the concentration of sulfur oxides which can be vented to the atmosphere. This has required either low sulfur coal, about 1% or less, or the coal can be treated to remove excessive sulfur. In either case, there is a substantial penalty. It has therefore been proposed to mix finely divided lime or limestone with the coal and during burning a considerable amount of sulfur dioxide is oxidized in the combustion process which always has excess oxygen and calcium sulfate is produced. The removal of the particulate calcium sulfate can be effected by conventional means such as electrostatic precipitation. Combustion is not as complete as could be desired and unless there is a very large excess of lime the amount of sulfur oxides removed can be insufficient in the case of high sulfur coals.

It is with an improved coal fuel that the present invention deals and problems such as explosion hazards in powdered coal plants that are not kept scrupulously clean are avoided.

SUMMARY OF THE INVENTION

In the present invention pulverized coal is used particle sizes below 100.mu. and a considerable portion is normally much finer down to as fine as 1.mu.. This is approximately the same form of coal used for powdered coal burning. When the tiny coal particles are examined under a microscope the surface appears quite porous. The pulverized coal is slurred with water and then oil is added, such as ordinary heating oil and the slurry is then subjected to violent sonic agitation. Ordinarily the frequency is in the ultrasonic range, for example from 20,000-30,000 Hz., or even higher frequencies. While in practice frequently ultrasonic agitation is used high sonic frequency for example 15,000-20,000 Hz. can be used, therefore throughout this specification the generic term "sonic" is used which covers both audible and ultrasonic frequencies. It should be realized that intense agitation which produces strong cavitation is necessary and this is measured as intensity and not as power. In the present invention the intensity should be at least 11.625 watts per cm.sup.2. Commonly intensities of around 38.75 to 54.25 watts per cm.sup.2 or a little less are employed. While there is a definite lower limit for sonic intensity below which satisfactory fuels will not be produced, there is no sharp upper limit. However there is no significant improvement above 54.25 watts per cm.sup.2 and higher intensities add to the cost of producing the fuel without resulting improvement. In other words, the upper limit is not a sharp physical limit but is dictated by economics.

So long as the energy density meets the specifications above, it does not make much difference how the sonic energy is produced and the present invention is not limited to any particular apparatus. A very practical sonic generator is a so called sonic or ultrasonic probe. Longitudinal vibrations are produced as conventional, either by piezoelectric, magneto strictive device or the like. The sonic generator proper is then coupled to a solid velocity transformer, sometimes called an acoustic transformer, which tapers down, preferably exponentially, ending in a surface of much smaller area than that coupled to the sonic generator. In accordance with the law of conservation of energy the distribution of the vibrations over the smaller surface requires that the surface move more rapidly. This results in a much greater energy density and as the total power is being transformed from a larger area to a smaller area, this is referred to as a transformer by analogy with electrical transformers which can step up voltage. Sonic probes of the type described above are commercial products and sold, for example by Branson Instruments under their trade name of "Sonifier." This type of apparatus for producing high sonic energy density, which should not be confused with sonic power, is a very economical and satisfactory type of producing the necessary sonic energy intensity. In a more specific aspect of the present invention the use of this type of instrument is included but of course the exact way the vibrating surface is energized is not what distinguishes the present invention broadly from the prior art.

The high intensity sonic agitation appears to drive water into the pores of the porous coal particles and then produces a water-in-oil type of emulsion. This is not a true emulsion because it includes suspension of the tiny coal particles as well as a dispersion of oil and water. However, the behavior of the resulting product which is a somewhat viscous liquid is not that of a typical emulsion. In a typical water-in-oil emulsion, the continuous oil phase can be diluted with more oil to produce a more dilute emulsion. In the case of the present invention, however, when an excess of oil is used oil separates as a separate phase, in this case a supernatant phase. While it is theoretically possible with an exact ratio of coal, water and oil to produce a product that does not separate out any oil phase as a practical matter this is undesirable because the separation it too critical and it is much better to operate with a small excess of oil and separate and recycle the supernatant phase. Although, as has been pointed out above, the product of the present invention is not technically a water-in-oil emulsion it has some properties that are similar. Thus, for example, after removing a supernatant oil phase the remaining oil and water remains stable in and around the coal particles and the product can be stored for a reasonable time without further separation of the components. For this reason the product will be referred to in the specification as an emulsion even though technically it is not a true emulsion. It is, however, a dispersion of the coal particles and tiny water droplets and, as pointed out above, it is stable. When the product or fuel of the present invention is burned it burns very cleanly with a flame of the color and characteristics of an oil flame rather than a powdered coal flame. Apparently during combustions there is not a physical production of fine coal particles although the exact mechanism of combustion has not been completely determined and the present invention is therefore not intended to be limited to any particular theory.

The exact proportion of coal, water and oil is not critical, which is an advantage. It will vary a little with the gravity of the oil and with particular coal an excellent practical ratio is about 20 parts of pulverized coal, 15 parts of oil and 10 parts of water. This product settles out only a little oil as a supernatant liquid and a very stable dispersion results. However, somewhat more oil may be used and in some cases is desirable because the separated oil phase can easily be recycled, and therefore the above ratio of ingredients is illustrative of a typical useful product. It should be noted that if there is an excess of water this also can separate a portion of water as a separate phase. For practical operation it is usually desirable to have any excess in the form of oil.

The violent sonic agitation also performs an additional function. It reduces the particle size of the coal, possibly because of coal particles striking each other during the violent agitation. The exact amount of reduction of particle size depends both on the energy density of the sonic agitation and on the character of the particle coal. A more fragile coal will, of course, be reduced somewhat more but the final size range still remains between about 1.mu. and about 100.mu..

While the dispersion is fairly viscous it still flows readily and does not have to be heated prior to supplying it to the burner. This is an advantage over burning highly viscous residual fuel oils which have to be heated by steam before being atomized in a burner. This is one of the advantages of the present invention as it permits eliminating heating equipment without eliminating its function.

The actual atomization in a burner is not what distinguishes the present invention from the prior art and any suitable form of a burner can be used. One such form is a sonic probe which atomizes the dispersion of fuel from its end.

Where the coal used is of low sulfur so that sulfur oxide emissions from a furnace stack are within environmental standards the fuel of the present invention may constitute only pulverized coal, oil and water, however, the present invention makes possible elimination of a large amount of sulfur oxides in a very simple and economical manner. This opens up cheap, high sulfur coal for use where it would otherwise not meet environmental standards. When it is desired to reduce sulfur oxide emissions preferably finely pulverized lime or limestone may be dispersed in the water. This will be generally referred to as lime and it may be introduced in the process of the present invention either before or after oil introduction, preferably it is introduced substantially simultaneously when feeding to the sonic emulsifier. It should be noted ordinarily pulverized lime will be fed in in the form of a water slurry and the water content must be taken into consideration in the total amounts of water in the final product. When the pulverized lime is introduced it forms part of the suspension and is stable and does not settle out on standing. This avoids any distinct problems and is a further advantage of the aspect of the present invention where sulfur oxides are decreased.

Lime is the preferred alkali to use when high sulfur coal is to be burned. It has many practical advantages such as low cost and the fact that the calcium sulfate which is produced in the flame has very low solubility in water. Other alkalis may be used such as for example sodium carbonate. Most of these other alkalis form sulfates which have considerable solubility in water. As water vapor is always produced in the burning of the fuel this can present problems particularly as at some stage of the stack gas treatment temperatures are reduced and liquid water may condense out. In such a case it can form somewhat pasty masses with alkalis, the sulfates of which are fairly soluble in water. This makes electrostatic precipitation more difficult, as the precipitator normally requires that the particles which it removes be dry. There is also a possibility in other parts of the combustion gas treatment equipment for deposition of pasty sulfates to result. This requires additional cost for cleaning and is one of the reasons why lime is the preferred alkali. However, other alkalis may be used and in its broadest aspect the invention is not limited to the use of lime although this is the preferred material.

The removal of sulfur oxides depends on the amount of lime or other alkali. The lime should normally be in excess over the stoichiometric value based on the sulfur content of the coal. The more lime used the greater reduction. For example with a 50% excess 50% of the sulfur oxides may be eliminated or rather fixed as calcium sulfate. When more lime is used the sulfur oxide reduction becomes greater reaching about 80% when the lime is in twice stoichiometric ratio. The additional removal of sulfur with still more lime occurs more slowly as the curve tends to asymptote and therefore ordinarily much greater excesses than twice stoichiometric are not economically worthwhile. With quite high sulfur coal the approximate 80% reduction brings the fuel within environmental standards. Lime, while not a very expensive material still adds to the cost and in some cases with lower sulfur coals a 50% sulfur oxide removal brings the fuel within environmental standards and in such cases smaller excesses of lime may be used. This is an economic question and there is no sharp upper limit. Theoretically calcium sulfate (gypsum) which is recovered by electrostatic precipitation or other means can be sold. However, the cost of producing the recovered gypsum may be more than its sale price so, where unneeded for environmental purposes, smaller lime excesses can present an economical advantage and are of course included.

BRIEF DESCRIPTION OF THE DRAWINGS

FIG. 1 is a diagrammatic showing of an experimental furnace burning the coal dispersion in a bed;

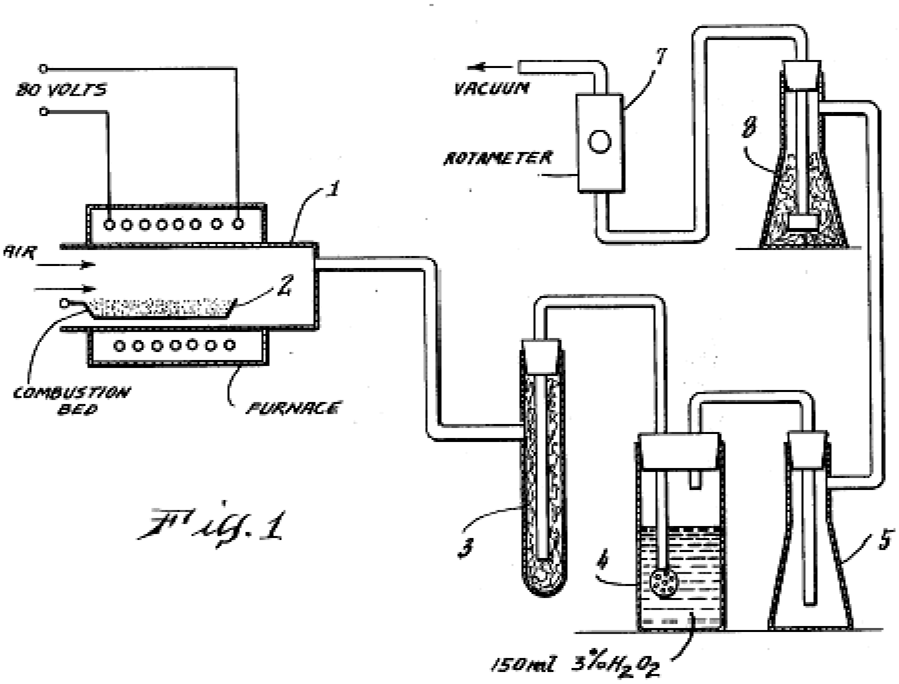

Fig. 1

FIG. 2 is a curve showing SO.sub.2 removal for various amounts of lime up to 50% excesses;

Fig. 2.

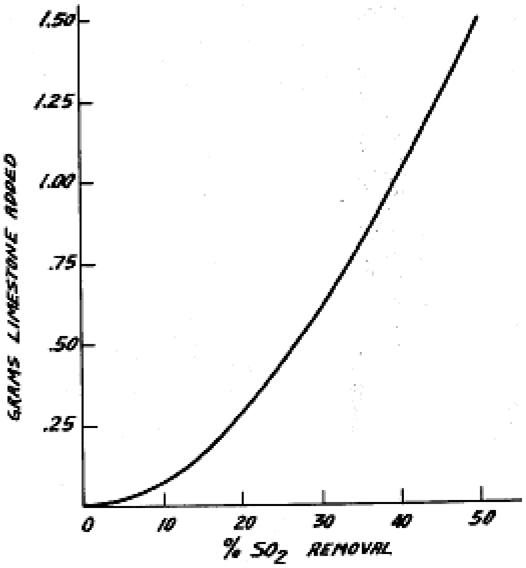

FIG. 3 is a diagrammatic flow sheet of a practical installation atomizing the coal dispersion to form a flame.

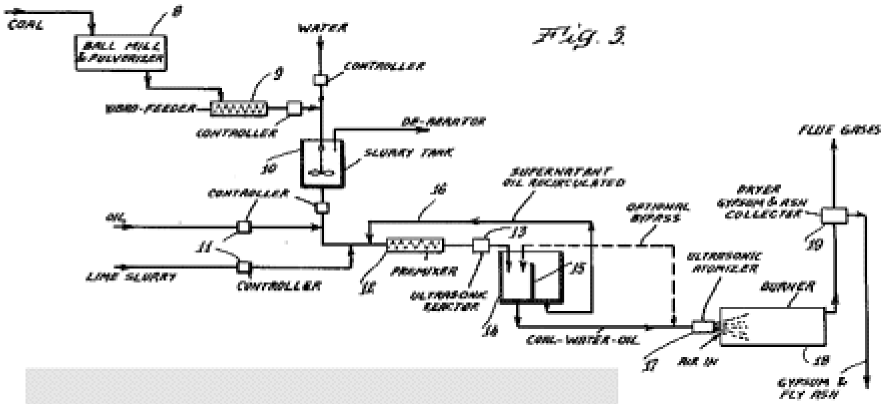

FIG. 4 is a semi-diagrammatic illustration of an ultrasonic probe.

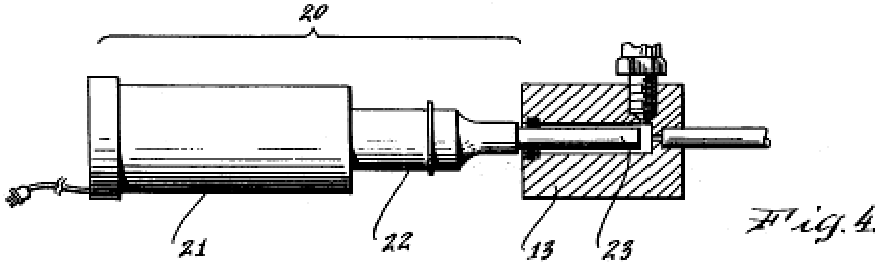

DESCRIPTION OF THE PREFERRED EMBODIMENTS

FIGS. 1 and 2 deal with an experimental set up in which the coal dispersion is burned in a bed. The coal dispersion is typically produced by dispersing 20 parts of coal in 10 parts of water adding 15 parts of oil, such as No. 2 heating oil, and subjecting the product to violent ultrasonic agitation with an energy density of between 38.75 to 54.25 watts per cm.sup.2. In order to permit rapid dispersion the thickness of the liquids in contact with the vibrating surface is of significance, for example, in an ultrasonic probe which will be described in combination with FIG. 4. The thickness of the liquid layer is not sharply critical, but should be normally considerably less than the diameter of the vibrating surface. If the thickness of liquid becomes much greater the output is reduced although if sufficient time is given a satisfactory dispersion can be produced in quite a thick liquid layer, however, this is economically undesirable. Obviously, of course, the thickness of the layer of the suspension between the vibrating surface and container must be greater than the dimensions of the largest coal particles. As has been stated above, the particular size range is from about 1.mu. to about 100.mu.. Although it is not practical to get an exact measurement the dispersion appears to be fairly uniform.

The present invention is not limited to any particular finely divided coal. Typical coals in the specific embodiments to be described are an eastern bituminous coal having from 1 to 2% of sulfur. Another typical coal is a western Kentucky coal having slightly more sulfur.

To produce a coal dispersion which will reduce sulfur oxide production on combustion pulverized lime in a water slurry is introduced at about the same time as the oil. The water in this slurry must of course be taken into consideration for the water proportion. If the coal is very low sulfur a lime excess of around 50% of stoichiometric can be used. For higher sulfur coals, for which the present invention is particularly advantageous, the excess should be about twice stoichiometric.

Turning back to FIG. 1 the experimental furnace is shown at (1) and is preheated electrically as is shown by the wires going to a surrounding electrical heating jacket. In the experimental set up the furnace was a cylindrical furnace about 1.25 inches in diameter. The coal dispersion is introduced and forms a bed on a suitable burning grate (2). Air is introduced as is shown and the amount of air should be approximately that corresponding to most economical combustion, i.e. a slight excess of air. The gases from the burning bed pass into a sidearm testube (3) which is filled with glass wool. This removes some solids and other impurities and then passes into a water scrubber (4) which in the experimental set up contains water with about 3% hydrogen peroxide. Then the gases pass on to a trap (5) and to a water trap (6) both in the form of sidearm flasks, the latter containing glass wool. The gases are pulled through by a partial vacuum as indicated on the drawing from any source, (not shown). Flow is measured by a rotameter (7).
It will be seen that Table 1 includes a number of tests made with varying amounts of oil and water and in each case included no finely divided lime or the number given in the table 1. This table also gives the amount of fuel burnt and sulfur oxides were measured by titrating with a sodium hydroxide solution.

The first four runs were burned in a bed, the fifth run atomized the fuel from the end of an ultrasonic probe. The sulfur oxide removal versus lime is shown as a graph up to 50% excess in FIG. 2. When the excess becomes greater than twice stoichiometric the curve flattens out or asymptotes at about 80% removal. In other words, in such a range the curve is actually an S. Curve.

FIG. 3 is a diagrammatic illustration of a practical flow sheet for a large plant. In this case the combustion is by atomizing the fuel from an ultrasonic probe. Coal, as shown on the drawing, is pulverized in a ball mill and pulverizer (8) and reduced to a particle size of less than 100.mu., with some of the particles as small as 1.mu.. The coal is then fed by a vibro-feeder (9) into a stream of water flowing at a controlled rate into a slurry tank (10). Slurring is effected by a conventional propeller, a vent to the air providing deaeration. The slurry then passes through a controller and oil controlled by controller (11) is introduced and a little further on a lime slurry passes through in the controller (11). The proportion of lime to sulfur in the coal is about twice stoichiometric.

The slurry is then premixed in a premixer (16). The premixed slurry is then introduced into a sonic disperser (13) in this disperser an ultrasonic probe operating at between 20,000-22,000 Hz of the type shown in FIG. 4 which will be described below and the end of the probe which is operated from the front of the container (13) to produce a thickness of liquid substantially less than the cross sectional dimension of the end of the probe. Violent sonic agitation with cavitation resulted in the energy intensity being about 38.75 to 54.25 watts per cm2. A stable dispersion is produced which flows into a separator (14) provided with a weir (15) this weir permits some supernatant oil to flow over into a compartment from which the recycling line (16) recycles it to the premixer (12).

The coal-water-oil-lime then flows into another ultrasonic probe housing (17) and is atomized from the end of the ultrasonic probe into a combustion chamber (18). It is burned and the flue gases pass through a particulate separator in the form of an electrostatic precipitator (19) this removes finely divided calcium sulfate which can be recovered and sold. With coal having 2-3% sulfur the removal of sulfur dioxide is about 80% which brings the flue gases to environmental standards.

FIG. 4 is a semi-diagrammatic showing of a typical ultrasonic probe (20). Ultrasonic vibrations from 20,000-22,000 Hz result from electricity at the same frequency which is shown coming in through wires. The vibration is in a piezo-electric stack (21) to which is coupled the broad end (22) of a steel velocity transformer which tapers exponentially to a small end (23). It is this end which agitates the dispersion in the agitator (18) on FIG. 3 and a similar probe produces atomization as indicated at (17) in FIG. 3.

Combustion of the atomized fuel produces a flame which is clear and results in complete combustion and which does not have the appearance of a flame from pulverized coal combustion. The presence of water in the fuel dispersion is probably what assures the flame quality and which permits very complete combustion. The combustion is so complete that there is very little if any loss in heating due to the presence of water which, of course, is flashed into steam as the dispersion burns.

4.0.0.6. Combustion Method Comprising Burning an Intimate Emulsion

of Fuel and Water USP #: 4,048,963; September 20, 1977; US Cl. 123/25R

Abstract

A combustion process in which a water-in-oil emulsion of liquid fuel, such as liquid hydrocarbons, containing from 10 to 50% water and preferably 10 to 30% water is burned. The emulsion is produced, with little or no added emulsifying agent, by sonic agitation, including a sonic generator and an acoustic transformer having a larger cross-section coupled to or in contact with the sonic generator than at its other end, at which emulsification takes place, whereby the sonic energy density is increased. With the increased sonic density an emulsion is produced which when burned produces a quality of burn such that the combustion is faster, more complete, and cleaner, with an increase in efficiency even up to 30% of water. The increase in efficiency often equals that obtained by the burning of the same weight of pure fuel in the conventional manner.

RELATED APPLICATIONS

This application is a continuation-in-part of my earlier application Ser. No. 489,710, filed July 18, 1974, which application in turn was a continuation-in-part of my application Ser. No. 280,967, filed Aug. 16, 1972, and which was a division of my application Ser. No. 122,632, filed Mar. 1, 1971, which is now U.S. Pat. No. 3,749,318, July 31, 1973. All of the earlier applications above referred to except Ser. No. 122,632 are now abandoned.

BACKGROUND OF THE INVENTION

he combustion of liquid fuel, such as liquid hydrocarbons, is a standard method of power and/or heat generation. The combustion may be in a system where the heat is transferred to another medium, such as water, with or without boiling the water, or the fuel may be burned in various types of internal combustion engines, such as those operating on Otto, diesel, or other cycle. The amount of oxygen, usually air, is at least about theoretically sufficient for complete combustion of the fuel elements.

Considerable problems have arisen. If there is a very large excess of oxygen, the efficiency of the combustion process is lowered because a considerable amount of air, including inert nitrogen, has to be heated up. In the case of an internal combustion engine also operating with excessive excesses of oxygen can result in slow combustion, which can overheat and burn out exhaust valves. If the combustion is with amounts of oxygen and fuel more nearly in balance, for example with only a small excess of oxygen, problems arise with incomplete combustion. This can result in excessive amounts of carbon monoxide and/or incompletely burned fuel, which may show up as unburned hydrocarbons, soot, and the like. Incomplete combustion lowers the combustion efficiency and can also contaminate the equipment. In the case of internal combustion engines, unburned hydrocarbons, carbon monoxide, and oxides of nitrogen, generally symbolized by the formula NO. sub. x, are serious atmospheric pollutants as they give rise to photochemical smog and the like. Contamination of nitrogen oxides from an internal combustion engine usually results when combustion temperature is high.

It has been proposed in the past to introduce streams of water into a burner or to inject water into an internal combustion engine as it operates. This has proven to reduce somewhat incompletely burned fuel deposited in the form of carbon, and in the case of internal combustion engines this can lower nitrogen oxide production and also in certain cases, such as aircraft piston engines, permit operating for short times at higher power outputs with very rich mixtures which would otherwise burn up the engine. Water injection, however, has serious drawbacks.

Problems have arisen in the control of relative amounts of water and fuel precisely, and even if the control is maintained to a satisfactory degree, efficiency drops because the water has to be vaporized.

It has also been proposed to produce an emulsion of hydrocarbon fuel and water by sonic vibration and then to burn this emulsion in a burner. This is described, for example, in the U.S. Pat. to Duthion, No. 3,658,302, Apr. 25, 1972. The Duthion patent utilizes a form of sonic agitation produced by impinging a jet of the liquids against the edge of a blade free to vibrate. This form of sonic device is known in the art as a liquid whistle and was developed by the inventor of the present application, whose earliest U.S. Pat. is No. 2,657,032, Oct. 1953. While the emulsion produced is capable, in some cases, of being burned in a burner, particularly when a considerable amount of surfactant is added, it does not burn completely and produces an amount of heat which is usually less than that obtained by burning the fuel content because with the poor quality of emulsion the heat required to vaporize the water reduces the efficiency.

The present invention deals with an improved water-in-oil emulsion with which much higher efficiency is produced.

SUMMARY OF THE INVENTION

The present invention burns a sonically emulsified, extremely fine water-in-oil emulsion, normally of hydro carbonaceous fuel, in which the water droplets are of extremely fine particle size. The emulsion is effected by sonic generator coupled to an acoustic transformer, with a larger cross-section coupled to or in contact with the sonic generator than at its other end where the emulsion of the present invention is produced. Because the sonic energy is distributed over a much smaller area, the energy density is greatly increased. Since the sonic generator is operated at a fixed, predetermined frequency, the transformation in the transformer causes the velocity of movement and also its path length at the small end to be increased in order to comply with the law of conservation of energy. For this reason the acoustic transformers of the type described above are often referred to in the art as velocity transformers and the two terms are synonymous. The small end of the acoustic transformer emulsifies fuel and water in a restricted space through which the two liquids flow. Energy densities of about an order of magnitude greater than those obtainable in the liquid whistle type of sonic agitator are readily obtained and produce an emulsion which is not only burnable but which when burned produces combustion efficiency such that the yield of useful heat, from say a conventional boiler, is almost the same as if pure oil had been burned. Therefore, improvements in efficiency of 10% to 30% are not uncommon. When used in an internal combustion engine, flame temperature is decreased but the total amount of power produced by the engine is as great as by burning a comparable amount of unemulsified fuel. The invention is not limited in its broadest aspect to a water content of from 10% to 30% water as emulsions having up to 50% water are still burnable though they do not produce as much heat as would be obtained by burning the same total quantity of unemulsified fuel. As is well known, acoustically it makes no difference whether the acoustic or velocity transformer has its large end in contact with the sonic generator or whether it is coupled to the sonic generator, for example through a resonant metal bar. In the claims the term "coupling" or "coupled" is used generically wherever the sonic energy is transmitted, substantially without loss, from the sonic generator to the large end of the transformer and is not limited to actual physical contact of the large end with the vibrating crystals or other elements of the sonic generator or through a coupling element.

The water content is not critical within its range, optimum results being obtainable with about 30% of water in an ordinary burner and less when the emulsion is used in an internal combustion engine; for example, optimum results are obtainable with about 18% to 20% water. In every case very clean combustion takes place, minimizing contamination and pollution, and in an internal combustion engine emission controls are readily met.

The surprising result of obtaining as much heat from an emulsion as with unemulsified fuel has been repeatedly tested. While I do not want to limit the present invention to any particular theory of why this surprising result takes place, it seems probable that the combustion of the emulsion in which the microscopic water globules explode into steam is more complete. The surfaces of a furnace or boiler encountering the flame may be below the condensation point of water or above, the latter being more common unless hot water at fairly low temperature is to be produced. In the case of an internal combustion engine temperature, the inner surfaces of the cylinder and the top of the piston are always above the condensation point of water when the engine is operating. The tests made and described in a later portion of the specification were with furnaces and engines where the surfaces were at a temperature higher than the condensation temperature of water, and therefore the improved results do not depend on the condensation of water vapor on cooler surfaces.

I also do not want to limit the invention to any particular theory of why the optimum water contents are somewhat lower for an internal combustion engine than for a burner in an ordinary heating furnace. A possible explanation might be that the heating oils have an average boiling point above that of water and, therefore, in the flame are completely exploded into steam without significant vaporization of the hydrocarbon fuel. In the case of gasoline used in the internal combustion engine tests, which will be described below, the average boiling point of gasoline is lower than that of water, and therefore it is possible that there may be some vaporization of gasoline during combustion before all of the water has been flashed into steam. There has been no rigorous proof of the above explanations but they are plausible possibilities and may well be part or all of the explanations of the surprising results obtained by the present invention.

In the internal combustion engine modification of the present invention, while the total amount of power may be as great or, under certain circumstances, even greater, the peak flame temperature is usually lower, and it seems probable that the reduced emission of nitrogen oxide results primarily from this factor. However, this is not known, and the water vapor present in larger amounts as compared to carbon dioxide may also play a part. Therefore, it is not intended to limit the invention to any particular theory, and the above statements are made because I think the factors mentioned are at least some, and conceivably the only, factors involved.

The invention is not limited to the time in the whole operation when the very fine water-in-oil emulsion is actually produced. This may be at the point where atomization takes place just prior or at the point of ignition. This, however, is not necessary, and the emulsion may be preformed and conveyed to the burner nozzle in a preformed state. The emulsions obtained by sonic agitation including the acoustic transformer are quite stable and so they can be produced at a point remote from the actual burner itself, and such a modification is, of course, included. It is also possible to have the emulsion formed by flowing water and oil over the emulsifying point, preferably the end of a sonic probe, so that the emulsion is formed at the same place, or practically at the same place, as atomization into the flame takes place. In the case of the use of sonic atomization, particularly for internal combustion engine use, which is described and claimed in my co-pending application, U.S. Pat. No. 3,756,575, issued Sept. 4, 1973, referred to above, it is usually preferable to have the streams of water and fuel unite just prior to the point of atomization.

It is an important advantage of the present invention that it is not necessary to use any emulsifying agent, particularly when sonic emulsification is used. This eliminates the added step and, therefore, cost of the emulsion is reduced, although in a broader aspect the present invention does not exclude an emulsion which has been made in the presence of a small amount of an emulsifying agent, such as a small amount, usually a fraction of a percent, of a dialkyl sulfosuccinate or other well known emulsifying agent capable of facilitating the formation of water-in-oil emulsions. The invention in this aspect, which is normally not preferred, may use any known emulsifying agent.

Ordinarily more problems are presented with the burning of heavy residual fuel oil, and this frequently requires steam heating. In the case of the present invention, however, the heavy oil emulsifies more readily than light oil, and when emulsified with a considerable amount of water, the viscosity is low enough so that it may be burned without preheating, or with less preheating, or at a lower temperature where cold water is added. This is an additional advantage for use with heavier oils. Why the heavy oil emulsifies more readily and to a lower viscosity has not been fully determined. It is possible that the heavy fuel oil contains contaminants which aid in the emulsification which are not present in the purer lighter fuel oils. It is not intended, however, to limit the present invention to any theory of action.

BRIEF DESCRIPTION OF THE DRAWINGS

FIG. 1 shows, in diagrammatic form, a sonic emulsifier and a burner;

FIG. 1

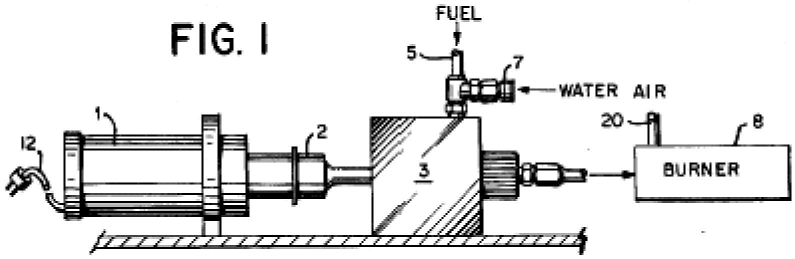

FIG. 2 is a detail on a somewhat enlarged scale, partly in section, of the emulsifier;

FIG. 2

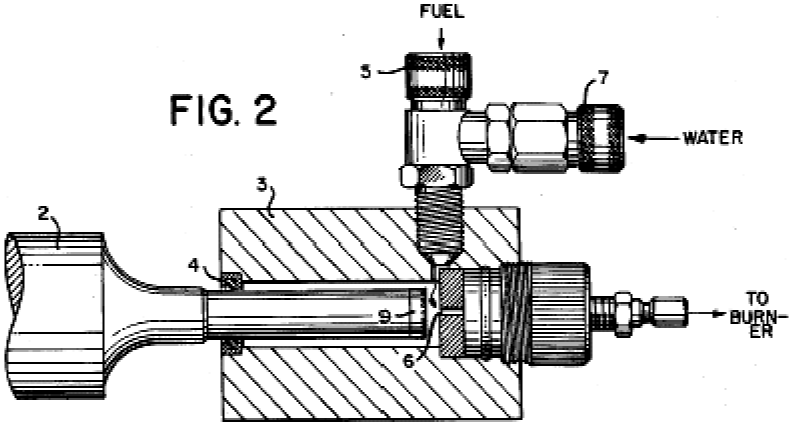

FIG. 3 is a semi-diagrammatic illustration of a combined sonic atomizer and emulsifier, especially useful with internal combustion engines, and

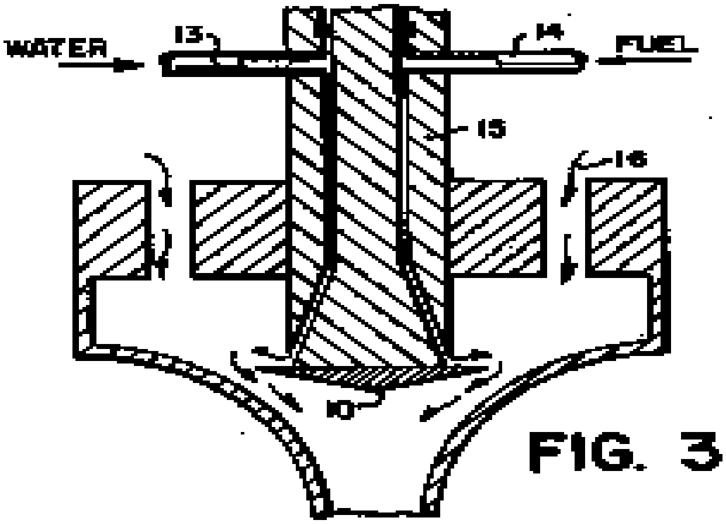

FIG. 3

FIG. 4 is a cross-section through a modified form of sonic probe.

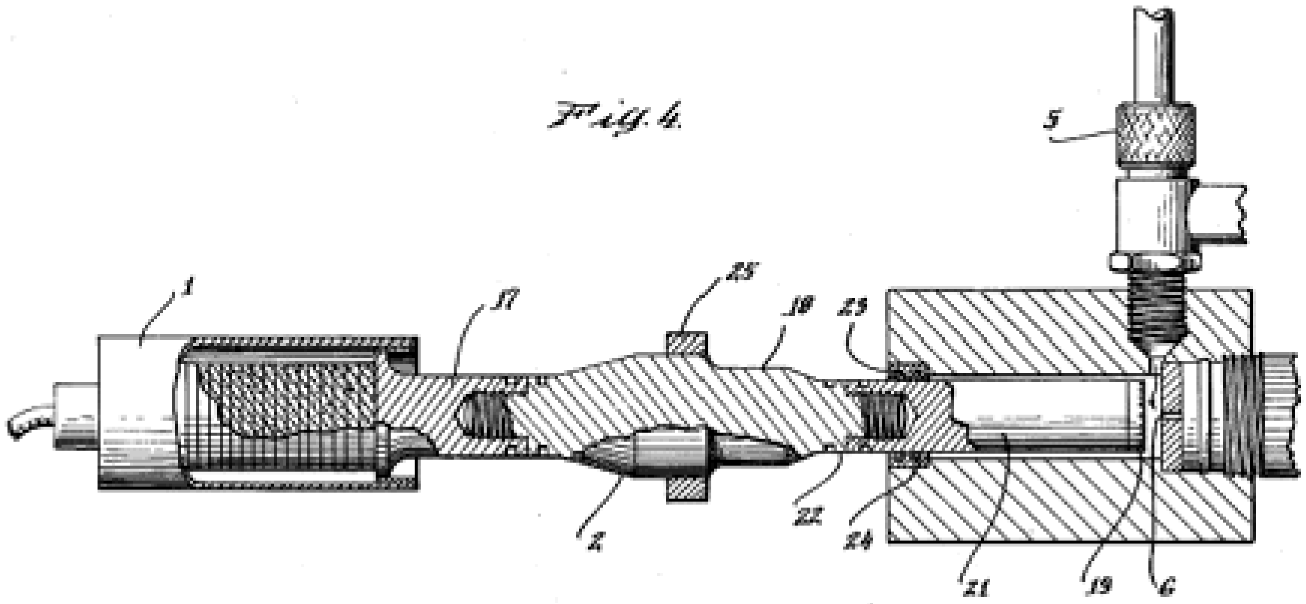

Fig. 4.

DESCRIPTION OF THE PREFERRED EMBODIMENTS

In FIG. 1 a sonic generator 1 is shown powering a sonic probe in the form of an acoustic transformer 2, the end 9 of which extends into a chamber 3 through a flexible seal 4 located substantially at a nodal point of the sonic probe. A stream of fuel, such as house heating fuel oil, is introduced through a conduit 5 and a stream of water joins it through a conduit 7 with a fail safe valve opened by fuel pressure. These two streams strike the vibrating end 9 of the sonic probe, as can best be seen in FIG. 2 where a portion of the chamber 3 is shown in section. The violent sonic agitation emulsifies the two streams, which then leave axially through an outlet conduit 6 in a plate 10 which is located closely adjacent to the vibrating end 9 of the sonic probe. From the outlet conduit 6 the emulsion passes into a conventional burner 8 in a combustion chamber, (not shown). Air is introduced at 26 and a flame results. While the proportions of fuel and water can vary over a wide range, for example from about 10% to about 50% water, a very suitable mixture is about 70% fuel and 30% water.

The sonic probe is of conventional design with a stack of piezoelectric plates, (not separately shown), which are energized through the cable 12 by a suitable high frequency oscillator, (not shown), which may operate, for example, at a frequency of approximately 20,000 HZ. The plate 9 at the end of the sonic probe 2 may be a flat plate or it may also be provided with a suitable baffle, for example a spiral baffle, to extend the period of residence in the violent sonic agitation field. The sonic generator illustrated diagrammatically is of a common commercial type sold by the Branson Instruments under their trade name "Sonifier." The particular design of the sonic emulsifier has nothing to do with the present invention and the illustration shows merely a typical one. The combination of the sonic generator and acoustic transformer is essential to produce the increased energy density on which the results of the present invention depend. However, the invention may use any other design having a sonic generator and an acoustic transformer producing comparable energy densities.

FIG. 4 illustrates a more recently developed Sonifier by Branson Instruments which has certain practical advantages, at least for larger burners. It is shown in cross-section. 1 is the generator, which is a stack of conventional piezoelectric crystals. These crystals are not of as large cross-section as the corresponding generator in FIGS. 1 and 2 because they are coupled to an acoustic transformer, which, as it performs the same function as the transformer in FIGS. 1 and 2, bears the same reference numeral 2. The coupling is through a half-wave resonant rod 17, which couples to the large end of the acoustic or velocity transformer 2. The large end is shown at 18, and the transformer can be clamped by the flange 25 where additional rigidity is desirable since the modified Sonifier is considerably longer in length than that shown in FIGS. 1 and 2. The small end 32 of the transformer is bolted to and therefore coupled to a rod 21 at the end of which there is the same kind of plate 19 as is shown in FIGS. 1 and 2. The rod is provided with lands 24 and elastomeric rings 23. This is the portion which is at an approximate quarter wavelength and which seals the container where the emulsion is produced. This container and associated elements are the same as in FIGS. 1 and 2. Therefore, they are not repeated in FIG. 4. The modified Sonifier has the advantage that it is not limited to a single size of acoustic transformer and can be used with transformers of various cross-sectional ratios. Also, it is provided with a clamping flange 25, as has been described, which permits much more rigid construction and makes it suitable for a longer probe. The operation is exactly the same. The vibrations produced by the vibrating crystals are coupled to the acoustic transformer 2 and the energy density is increased in the same way as by the transformer in FIGS. 1 and 2.

The equipment of FIGS. 1 to 4 produce the same increased energy density at the small end of the probe. It should be noted that this is energy density, i.e. violence of agitation, which is effected by longer paths, hence the alternative name of velocity transformer. It is energy density which is required in the present invention and not total power input. As has been stated earlier, the energy density is about an order of magnitude greater than can be produced in a liquid whistle, and in the probes of FIGS. 1 to 4, for illustration, this energy density is approximately 37 watts/cm.sup.2.

As illustrated and described above, stable fuel and water emulsions of the water-in-oil type are produced, and when these emulsions are burned combustion results in a boiler were measured in relative times to bring the water in the boiler jacket from a particular temperature to a temperature just below its boiling point. The test accurately measures the relative heating efficiencies and is shown in the following table, which illustrates the results of eight tests, tests 1 to 5 being with straight No. 2 domestic heating oil and tests 6, 7 and 8 with a mixture of oil and water.

Boiler surfaces were carefully examined in the tests and were clean. A flame was produced which was whiter; there was no visible smoke from the chimney, and stack gas analysis showed a more complete and perfect combustion.

Tests were made comparing water-in-oil emulsions produced in a standard commercially available liquid whistle which is similar to the design described in the first Cottell U.S. Pat. No. 2,657,021, referred to above, with emulsions produced by emulsifiers used in the present invention and described in FIGS. 1 to 3. Liquid pressure in the liquid whistle was 200 psi and the energy density level in the sonic emulsifiers was approximately 37 watts/cm.sup.2 or about an order of magnitude greater than in the liquid whistle. The tests with various amounts of water and No. 2 heating oil were compared in two respects, one, stability, i.e. time for onset of emulsion inversion, and, two, flame characteristics.

It will be seen that at all water contents much more stable emulsions were produced in the ultrasonic fuel reactor of the present invention and the flame was excellent whereas emulsions from the liquid whistle produced intermittent flame accompanied by smoke, and in the operation flame out actually occurred.

FIG. 3 illustrates a modification particularly useful for internal combustion engines. The ultrasonic probe carries the same reference numerals as in FIGS. 1 and 2, but the shape of the end of the probe is a little different, being expanded out into a plate 10. Gasoline was introduced through the conduit 14 into an annular space between the probe and a housing 15, and water was introduced through conduit 13. The two liquids flow down until they come to the edge of the expanded plate 10, where they proceed to flow along the top of the plate and are atomized and emulsified at the same time. Air is introduced adjacent the atomized emulsion through an air conduit 16 and the resulting mixture is fed into the manifold of an internal combustion engine, (not shown).

The plate 10 projects beyond the housing, the clearance between housing and ultrasonic probe being exaggerated and the violent sonic agitation of the plate throws a finely divided emulsion up from the upper surfaces of its projection. As FIG. 3 is designed to connect with a manifold of an internal combustion engine, there will usually be a certain amount of vacuum, and this causes the emulsion to be pulled around the edge of the plate, as is shown by the arrows. Thorough mixing of the air takes place, but it is not necessary that the emulsion be thrown by sonic vibration into the manifold, whereas in FIG. 4 with the horizontal burner this is necessary so that the fine emulsion atomized in the blast of air moves horizontally to form the burner flame. It is for this reason that the actual contact of the plate with the film of fuel and water flowing over it is on its forward face so that it will be thrown in the direction to form the burner flame, for of course in an ordinary burner there is not the vacuum which exists in an internal combustion engine manifold.

The internal combustion engine fed with a gasoline and water emulsion atomized into the air ran with the same power as on straight gasoline, and pollutants were reduced, unburned hydrocarbons practically zero, carbon monoxide greatly reduced, and nitrogen oxides still more reduced. The figures illustrate the pollutant concentrations, the engine running at about 5,000 rpm under load. It will be noted that the pollutant concentrations are far below present emission standards and even meet more rigid standards proposed for later years. Carbon monoxide 0.94% unburned hydrocarbons 0.0, nitrogen oxides 11.35 ppm.

4.0.0.7. Hydrogen Gas Injector System for Internal Combustion Engine;

US #: 4,389,981; (June 28, 1983),

System and apparatus for the controlled intermixing of a volatile hydrogen gas with oxygen and other non-combustible gasses in a combustion system. In a preferred arrangement the source of volatile gas is a hydrogen source, and the non-combustible gasses are the exhaust gasses of the combustion system in a closed loop arrangement. Specific structure for the controlled mixing of the gasses, the fuel flow control, and safety are disclosed.

CROSS REFERENCES AND BACKGROUND

There is disclosed in my co-pending U.S. patent application Ser. No. 802,807 filed Sept. 16, 1981 for a Hydrogen-Generator, a generating system converting water into hydrogen and oxygen gasses. In that system and method the hydrogen atoms are dissociated from a water molecule by the application of a non-regulated, non-filtered, low-power, direct current voltage electrical potential applied to two non-oxidizing similar metal plates having water passing therebetween. The sub-atomic action is enhanced by pulsing the non-regulated and non-filtered direct current voltage. The apparatus comprises structural configurations in alternative embodiments for segregating the generated hydrogen gas from the oxygen gas.

In my co-pending patent application filed May 5, 1981, U.S. Ser. No. 262,744 now abandoned for Hydrogen-Airdation Processor, non-volatile and non-combustible gasses are controlled in a mixing stage with a volatile gas. The hydrogen processor system utilizes a rotational mechanical gas displacement system to transfer, meter, mix, and pressurize the various gasses. In the gas transformation process, ambient air is passed through an open flame gas-burner system to eliminate gasses and other present substances. Thereafter the non-combustible gas-mixture is cooled, filtered for impurity removal, and mechanically mixed with a pre-determined amount of hydrogen gas. There results a new synthetic gas. The synthetic gas formation stage also volume meters and determines the proper gas-mixing ratio for establishing the desired burn-rate of hydrogen gas. The rotational mechanical gas displacement system in that process determines the volume-amount of synthetic gas to be produced.

The above-noted hydrogen processor, of my co-pending application, is a multi-stage system having utility in special applications. Whereas the hydrogen generator system of my other mentioned co-pending application does disclose a very simple and unique hydrogen generator.

In my co-pending patent application Ser. No. 315,945, filed Oct. 18, 1981 there is disclosed a combustion system having utility in a mechanical drive system. Particularly in one instance to drive a piston in an automotive device. There is shown a hydrogen generator for developing hydrogen gas, and perhaps other non-volatile gasses such as oxygen and nitrogen. The hydrogen gas with the attendant non-volatile gasses are fed via a line to a controlled air intake system. The combined hydrogen, non-volatile gasses, and the air after inter-mixing are fed to a combustion chamber where it is ignited. The exhaust gasses of the combustion chamber are returned in a closed loop arrangement to the mixing chamber for the mixture of volatile and non-combustible gasses. Particular applications and structural embodiments of the system are disclosed.

SUMMARY OF INVENTION

The system of the present invention in its most preferred embodiment is for a combustion system utilizing hydrogen gas; particularly to drive a piston in an automobile device. The system utilizes a hydrogen generator for developing hydrogen gas. The hydrogen gas and other non-volatile gasses are fed to a mixing chamber also having oxygen fed thereto. The mixture is controlled to regulate the burning temperature; that is, to lower the temperature velocity of the hydrogen gas to that of the commercial fuels. The hydrogen gas feed line to the combustion chamber includes a fine linear control gas flow valve. An air intake is the source of oxygen and it also includes a variable valve. The exhaust gasses from the combustion chamber are utilized in a controlled manner as the non-combustible gasses.

The hydrogen generator is improved upon to include a holding tank to provide a source of start-up fuel. Also, the hydrogen gas generator includes a switch to the power source operable from one position to another dependent upon a pressure sensing switch on the combustion chamber.

The simplified structure includes a series of one-way valves, safety valves, and quenching apparatus. The combination of apparatus comprises the complete assembly for converting the standard automobile engine from gasoline (or other fuels) to the hydrogen gas mixture.

OBJECTS

It is accordingly a principal object of the present invention to provide a combustion system of gasses combined from a source of hydrogen and non-combustible gasses.

Another object of the invention is to provide such a combustion system that intermixes the hydrogen and non-combustible gasses in a controlled manner and thereby control the combustion temperature.

A further object of the invention is to provide such a combustion system that controls the fuel flow to the combustion chamber in s system and apparatus particularly adapted to hydrogen gas.

Still other objects and features of the present invention will become apparent from the following detailed description when taken in conjunction with the drawings in which:

BRIEF DESCRIPTION OF DRAWINGS

FIG. 1 is a mechanical schematic illustration partly in block form of the present invention in its most preferred embodiment.

FIG. 1.

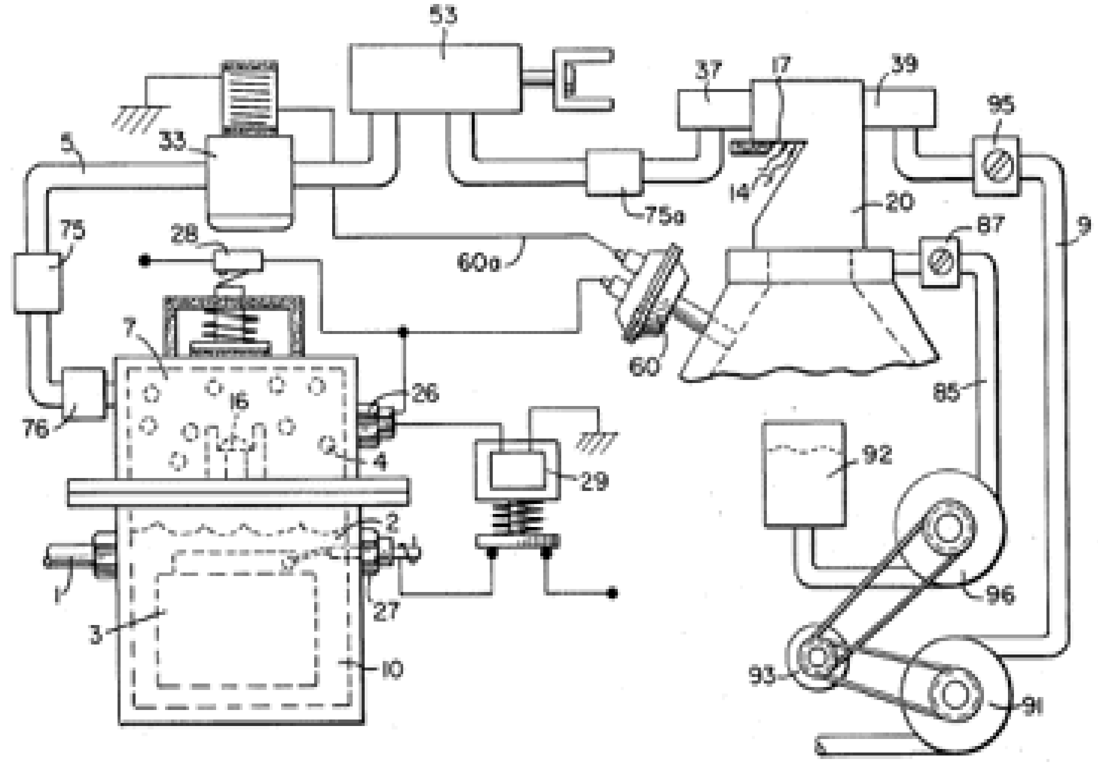

FIG. 2 is a block schematic illustration of the preferred embodiment of the hydrogen injector system of FIG. 1.

FIG. 2.

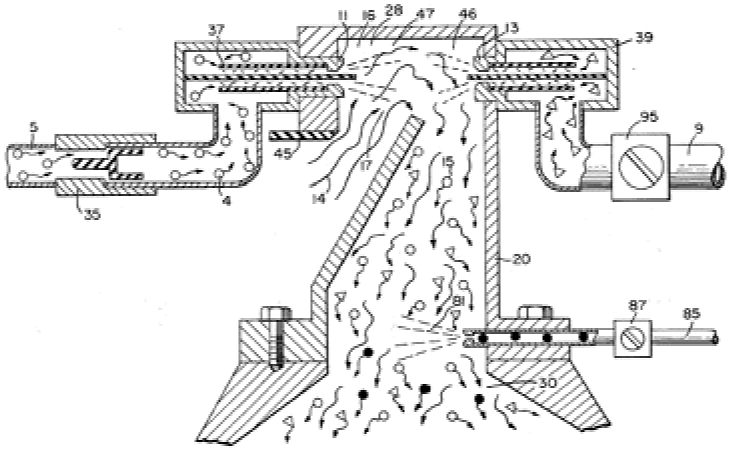

FIG. 3 is the fine linear fuel flow control shown in FIG. 1.

FIG. 3.

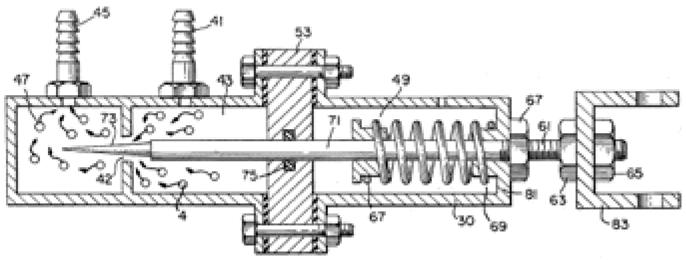

FIG. 4 is crossectional illustration of the complete fuel injector system in an automobile utilizing the concepts of the present invention.

FIG. 4.

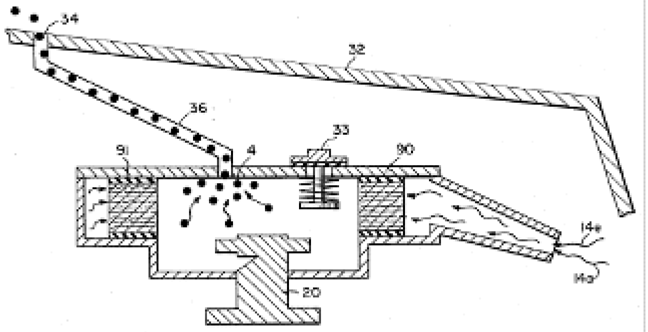

FIG. 5 is a schematic drawing in a top view of the fuel injector system utilized in the preferred embodiment.

FIG. 5.

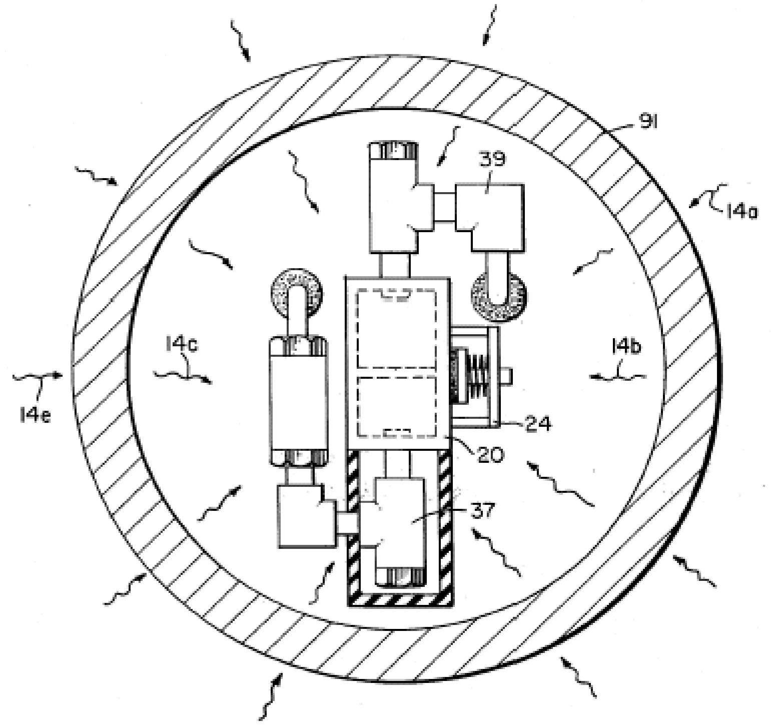

FIG. 6 is a crossectional side view of the fuel injector system in the present invention.

FIG. 6.

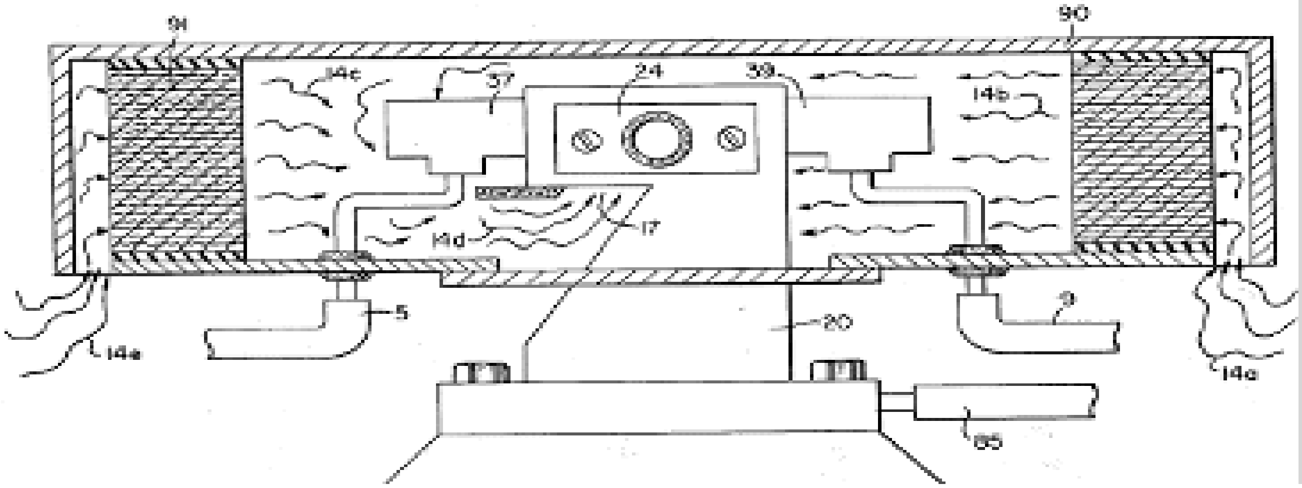

FIG. 7 is a side view of the fuel mixing chamber.

FIG. 7.

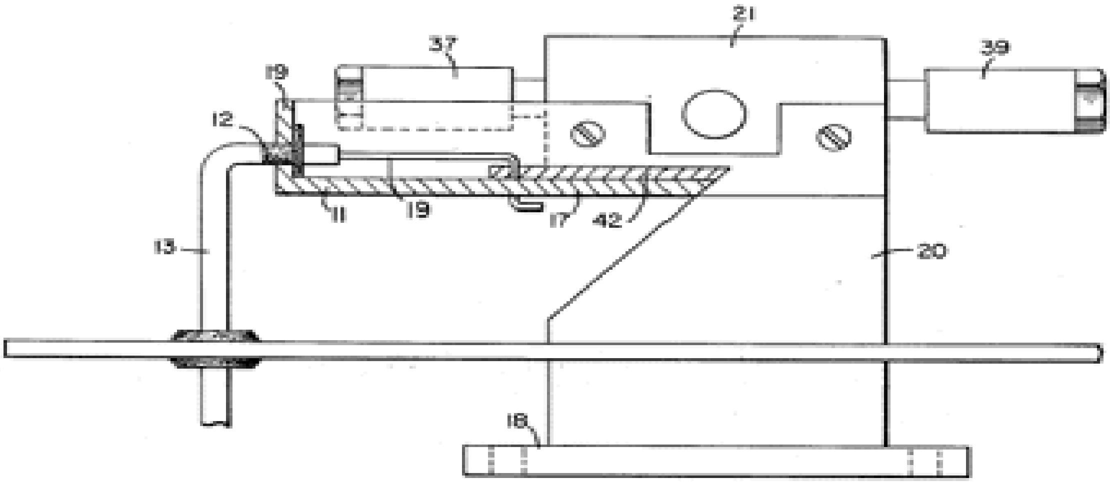

FIG. 8 is a top view of the air intake valve to fuel mixing chamber.

FIG. 8.

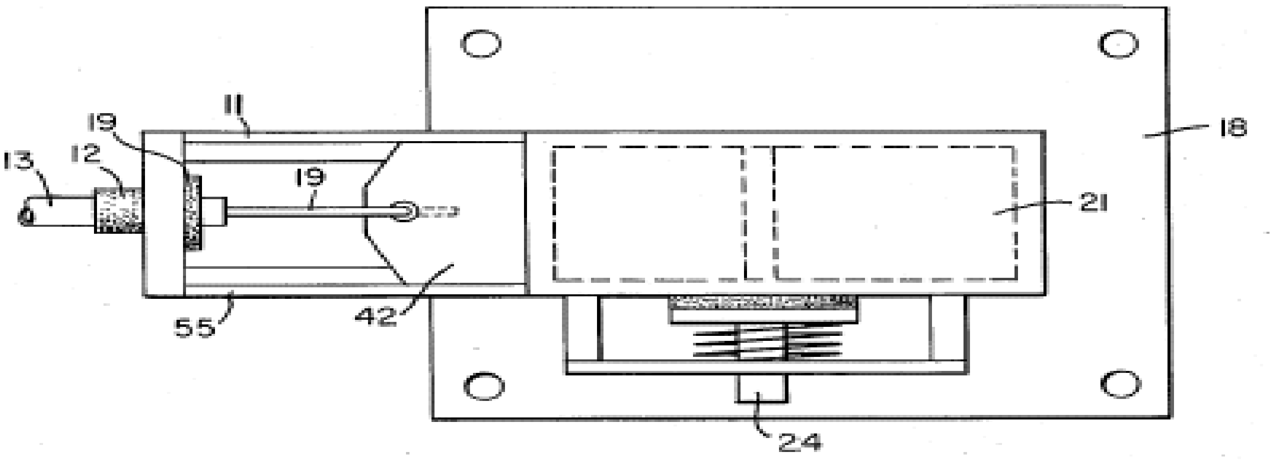

FIG. 9 is a comparison of the burning velocity of hydrogen with respect to other fuels.

FIG. 9.

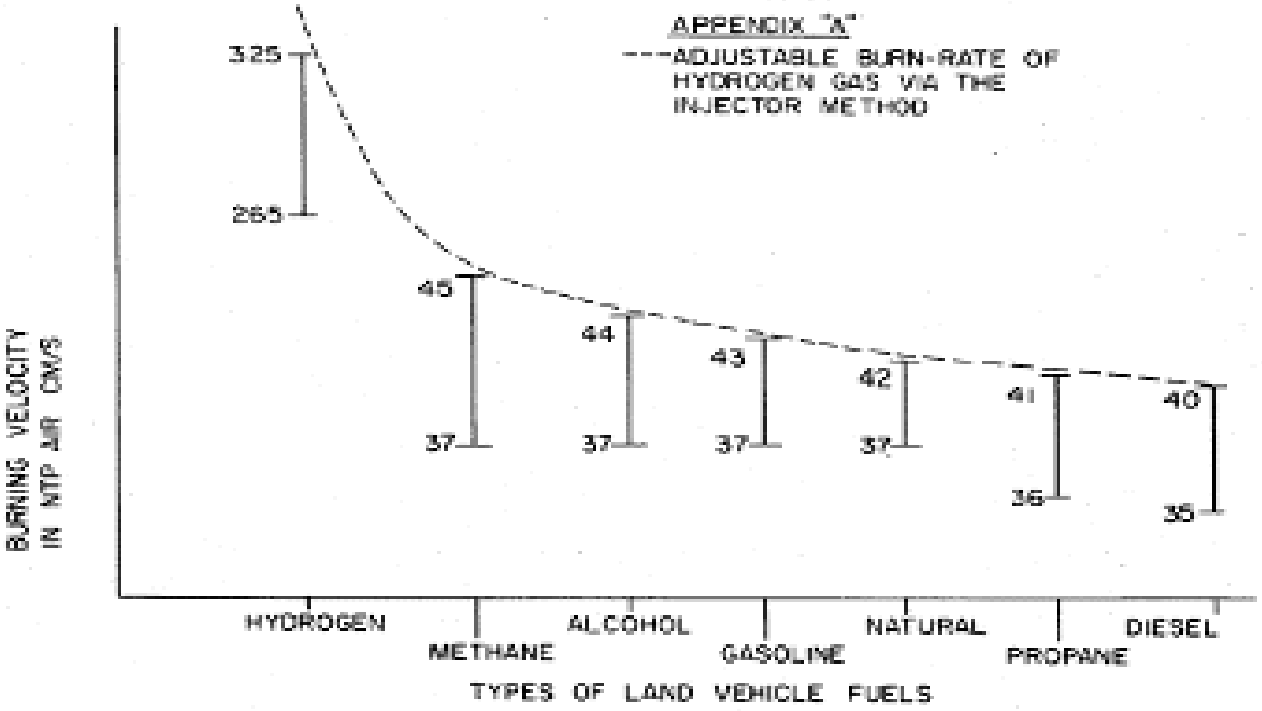

DETAILED DESCRIPTION OF INVENTION TAKEN WITH DRAWINGS

Referring to FIG. 1 the complete overall gas mixing and fuel flow system is illustrated together for utilization in a combustion engine particularly an engine utilized in an automobile.
With specific reference to FIG. 1, the hydrogen source 10 is the hydrogen generator disclosed and described in my co-pending application, supra. The container 10 is an enclosure for a water bath 2. Immersed in the water 2 is an array of plates 3 as further described in my co-pending application, supra. Applied to plates 3 is a source of direct current potential via electrical inlet 27. The upper portion 7 of the container 10 is a hydrogen storage area maintaining a predetermined amount of pressure. In this way for start up there will be an immediate flow of hydrogen gas. To replenish the expended water the generator provides a continuous water source 1. Thereafter, the generator is operable as described in the aforesaid patent application.

The safety valve 28 is rupturable upon excessive gas build-up. Whereas the switch 26 is a gas pressure switch to maintain a predetermined gas pressure level about a regulated low-volume. The generated hydrogen gas 4 is fed from the one-way check valve 16 via pipe 5 to a gas mixing chamber 20, wherein the hydrogen gas is inter-mixed with non-combustible gasses via pipeline 9 from a source hereinafter described.

In the event one way valve 75 should fail and there be a return spark that might ignite the hydrogen gas 4 in the storage area 7 of hydrogen generator 10, quenching assembly 76 will quench the spark and prevent such ignition.

With particular reference to FIG. 2 the hydrogen gas via pipe line 5 and non-combustible gasses via pipe line 9 are fed to a carburetor (air-mixture) system 20 also having an ambient air intake 14.

The hydrogen gas 4 is fed via line 5 through nozzle 11 in a spray 16 in to the trap area 46 of the mixing chamber 20. Nozzle 11 has an opening smaller than the plate openings in the quenching assembly 37, thereby preventing flash back in the event of sparking. The non-volatile gasses are injected into mixing chamber 20 trap area 47 in a jet spray 17 via nozzle 13. Quenching assembly 39 is operable much in the same manner as quenching assembly 37.
The ambient air is, in the preferred arrangement, the source of oxygen necessary for the combustion of the hydrogen gas. Further, as disclosed in the aforesaid co-pending application the non-volatile gasses are in fact the exhaust gasses in a closed loop system. It is to be understood that the oxygen and/or the non-combustible gasses can be from an independent source.

With continued reference to FIG. 2 the gas trap area 47 is a predetermined size. In that hydrogen is lighter than air, the hydrogen will rise and become entrapped in the are 47. The size of area 47 is sufficient to contain enough hydrogen gas for instant ignition upon start up of the combustion engine.
It will be noted that the hydrogen gas is injected in the uppermost region of the trap area 47. Hydrogen rises at a much greater velocity than oxygen or non-combustible gasses; perhaps three times or greater. Therefore, if the hydrogen gas entered the trap area 47 (mixing area) at its lowermost region the hydrogen gas would rise so rapidly that the air could not mix with the oxygen. With the structure shown in FIG. 2 of the trap area 47, the hydrogen gas is forced

downwardly into the air intake 15. That is, the hydrogen gas is forced downwardly into the upwardly forced air and readily mixed therewith.

The ratio of the ambient air (oxygen) 14 and the non-combustible gas via line 9 is a controlled ratio and determined by the particular engine. Once the proper combustion rate is determined by the adjustment of valve 95 for varying the amount of the non-combustible gas and the adjustment of valve 45 for varying the amount of the ambient air, the ratio is maintained.

In a system wherein the non-combustible gasses are the exhaust gasses of the engine in a closed loop-arrangement, and wherein the air intake is under the control of the engine, the flow velocity and hence the air/non-combustible mixture, is maintained by the acceleration of the engine.

The mixture of air with non-combustible gasses becomes the carrier for the hydrogen gas. That is, the hydrogen gas is superimposed on the air/non-combustible mixture. By varying the amount of hydrogen gas superimposed on the air/non-combustible mixture, the r. p. m. of the engine is controlled.

Reference is made to FIG. 3 illustrating precisely in a side view crossection the fine linear fuel flow control 53. The hydrogen gas 4 enters chamber 43 via gas inlet 41. The hydrogen gas passes from chamber 43. The hydrogen gas passes from chamber 43 to chamber 47 via port or opening 42. The amount of gas passing form chamber 43 to chamber 47 is controlled by controlling the port opening 42.

The port opening is controlled by the insertion there through the linearly tapered pin 73. The blunt end of pin 73 is fixed to rod 71. Rod 71 passed by supporting O-ring 75, through opening 81 in housing 30, to manual adjustment mechanism 83.

The spring 49 retains the rod 71 is a fixed position relative to the pin 73 and opening 42. Upon actuating the mechanism 83, the pin 73 will recede from the opening 42 there by increasing the amount of gas passing from chamber 43 to chamber 47.

The stops 67 and 69 maintain spring 49 in its stable position. The position of the pin 73 in a fixed position relative to opening 42 is adjusted via threaded nuts 63 and 67 on threaded rod 61. That is, the threaded adjustment controls the idle speed or permits the minimum amount of gas to pass from chamber 43 to chamber 47 for continuous operation of the combustion engine.

Referring now to FIG. 8 there is illustrated the air adjustment control for manipulating the amount of air passing into the mixing chamber 20. The closure 21 mounted on plate 18 has an opening 17 on end 11 thereof. Slide ably mounted over said opening 17 is a plate control 42. The position of the plate relative to the opening 17 is controlled by the position of the control rod 19 passing through a grommet 12 to control line. In event of malfunction that may cause combustion of gasses in mixing chamber 20, release valve 24 will rupture.

With reference now to FIG. 4, in the event hydrogen gas 4 should accumulate in the mixing chamber 20 to excessive pressure, an escape tube 36 connected to a port 34 on the automobile hood 32 permits the excess hydrogen gas to safely escape to the atmosphere. In the event of a malfunction that may cause combustion in the mixing chamber 20, the pressure relief valve 33 will rupture expelling hydrogen gas without combustion.

In the constructed arrangement of FIG. 1, there is illustrated a gas control system that may be retrofitted to an existing automobile internal combustion engine without changing or modifying automobile's design parameters or characteristics.

The flow of the hydrogen volatile gas is, of course, critical; therefore, there is incorporated in line 5 a gas flow valve 53 (FIG. 1) to adjust the hydrogen flow. Gas flow valve is described in detail with reference to FIG. 3.

The intake air 14 may be in a carburetor arrangement with an intake adjustment 55 that adjusts the plate 42 opening and also more fully described with reference to FIG. 8.

To maintain constant pressure in hydrogen gas storage 7 in the on-off operation of the engine, the gas flow control valve is responsive to the electrical shut-off control 33. The constant pressure permits an abundant supply of gas on start up and during certain periods of running time in re-supply.

The switch 33 is in turn responsive to the vacuum control switch 60. During running of the engine vacuum will be built up which in turn leaves switch 33 open by contact with vacuum switch 60 through lead 60a. When the engine is not running the vacuum will decrease to zero and through switch 60 will cause electrical switch 33 to shut off cutting off the flow of hydrogen gas to the control valve 53.

As low-voltage direct current is applied to safety valve 28, solenoid 29 is activated. The solenoid applies a control voltage to the hydrogen generator exciter 3 via terminal 27 through pressure switch 26. As the electrical power activates electric solenoid 29, hydrogen gas is caused to pass through flow adjustment valve 16 and then outlet pipe 5 for utilization. The pressure differential hydrogen gas output to gas mixing chamber 20 is for example 30 lbs. to 15 lbs. Once hydrogen generator 10 reaches an optimum gas pressure level, pressure switch 26 shuts off electrical power to the hydrogen excitors. If the chamber pressure exceeds a predetermined level, the safety release valve 28 is activated disconnecting the electrical current and thereby shutting down the entire system for safety inspection.

With particular reference now to FIG. 6 there is illustrated the fuel injector system in a side crossectional view and to FIG. 5 in a top view. The structural apparatus incorporated in the preferred embodiment comprises housing 90 having air intakes 14a and 14e. The air passes through filter 91 around the components 14b and 14c and then to intake 14d of the mixing chamber 20. The hydrogen enters via line 5 via quenching plates 37 and into the mixing chamber 20. The non-volatile gasses pass via line 9 to the quenching plates 39 and into the mixing chamber 20.

FIG. 7 illustrates the mechanical arrangement of components comprising the overall structure of the mixing chamber 20 and shown independently in the other figures.

Returning to FIG. 1 there is illustrated the non-volatile gas line 9 passing through mixture pump 91 by engine pulley 93. Valve 95 controls the rate of flow.

Also driven by pulley 93 is pump 96 having line 85 connected to an oil reservoir 92 and valve 87 and finally to mixing chamber 20. As a practical matter, such as in a non-oil lubricated engine, lubricating fluid such as oil 81 is sprayed in the chamber 20, via oil supply line 85 for lubrication.

There has been several publications in the past year or so delving on the properties of Hydrogen gas, its potential use, generating systems, and safety. One such publication is "Selected Properties of Hydrogen" (Engineering Design Data) issued February 1981 by the National Bureau of Standards.

These publications are primarily concerned with the elaborate and costly processes for generating hydrogen. Equally so, they are concerned with the very limited use of hydrogen gas because of its extremely high burning velocities. This in turn reflects the danger in the practical use of hydrogen.

With reference to the graph of the Appendix A, it is seen that the burning velocities of alcohol, propane, methane, gasoline, natural gas, and diesel oil are in the range of minimum 35 to maximum 45. Further, the graph illustrates that the burning velocity of hydrogen gas is in the range of 265 minimum to 325 maximum. In simple terms in the order of 7.5 times the velocity of ordinary commercial fuels.

Because of the hydrogen gas unusually high burning velocity, hydrogen gas has been ruled out, by these prior investigators as a substitute fuel. Further, even if an engine could be designed to accommodate such high velocities, the danger of explosion would eliminate any thoughts of commercial use.

The present invention, as above described, has resolved the above-noted criteria for the use of hydrogen gas in a standard commercial engine. Primarily, the cost in the generation of hydrogen gas, as noted in the aforementioned co-pending patent applications, is most minimal. Water with no chemicals or metals is used. Also, as note in the aforementioned co-pending patent applications, is the reduction in the hydrogen gas velocity. These co-pending applications not only teach the reduction in velocity, but teach the control of the velocity of the hydrogen gas.
In the preferred embodiment, practical apparatus adapting the hydrogen generator to a combustion engine is described. The apparatus linearly controls the hydrogen gas flow to a mixing chamber mixing with a controlled amount of non-combustible gas oxygen, hence, the reduction in the hydrogen gas velocity. The reduction in the hydrogen gas velocity makes the use of hydrogen as safe as other fuels.

In more practical terms the ordinary internal combustion engine of any size or type of fuel, is retrofitted to be operable with only water as a fuel source. Hydrogen gas is generated from the water without the use of chemicals or metals and at a very low voltage. The burning velocity of the hydrogen gas has been reduced to that of conventional fuels. Finally, every component or step in the process has one or more safety valves or features thereby making the hydrogen gas system safer than that of conventional automobiles.

In the above description the terms non-volatile and non-combustible were used. It is to be understood they are intended to be the same; that is, simply, gas that will not burn.

Again, the term storage has been used, primarily with respect to the hydrogen storage area 7. It is not intended that the term "storage" be taken literally--in fact it is not storage, but a temporary holding area. With respect to area 7, this area retains a sufficient amount of hydrogen for immediate start-up.

Other terms, features, apparatus, and the such have been described with reference to a preferred embodiment. It is to be understood modifications and alternatives can be had without departing from the spirit and scope of the invention.

4.0.0.8. Hydrogen Gas Burner; US #: 4,421,474;

A hydrogen gas burner for the mixture of hydrogen gas with ambient air and non-combustible gasses. The mixture of gasses when ignited provides a flame of extremely high, but controlled intensity and temperature. The structure comprises a housing and a hydrogen gas inlet directed to a combustion chamber positioned within the housing. Ambient air intake ports are provided for adding ambient air to the combustion chamber for ignition of the hydrogen gas by an ignitor therein. At the other end of the housing there is positioned adjacent to the outlet of the burner (flame) a barrier/heating element. The heating element uniformly disperses the flame and in turn absorbs the heat. The opposite side to the flame, the heating element uniformly disperses the extremely hot air. A non-combustible gas trap adjacent to the heating element captures a small portion of the non-combustible gas (burned air). A return line from the trap returns the captured non-combustible gas in a controlled ratio to the burning chamber for mixture with the hydrogen gas and the ambient air.

CROSS REFERENCE

The hydrogen/oxygen generator utilized in the present invention is that disclosed and claimed in my co-pending patent application, Ser. No.: 302,807, filed: Sept. 16, 1981, for: HYDROGEN GENERATOR SYSTEM. In that process for separating hydrogen and oxygen atoms from water having impurities, the water is passed between two plates of similar non-oxidizing metal. No electrolyte is added to the water. The one plate has placed thereon a positive potential and the other a negative potential from a very low amperage direct-current power source. The subatomic action of the direct current voltage on the non-electrolytic water causes the hydrogen and oxygen atoms to be separated--and similarly other gasses entrapped in the water such as nitrogen. The containments in the water that are not released are forced to disassociate themselves and may be collected or utilized and disposed of in a known manner.

The direct current acts as a static force on the water molecules; whereas the non-regulated rippling direct current acts as a dynamic force. Pulsating the direct current further enhances the release of the hydrogen and oxygen atoms from the water molecules.

In my co-pending patent application, Ser. No.: 262,744, filed: May 11, 1981, for: HYDROGEN AIRATION PROCESSOR, there is disclosed and claimed the utilization of the hydrogen/oxygen gas generator. In that system, the burn rate of the hydrogen gas is controlled by the controlled addition of non-combustible gasses to the mixture of hydrogen and oxygen gasses.

The electrolysis process for generating hydrogen and oxygen gas is well known in the art. It is, of course, further understood with a proper mixture of oxygen gas, the hydrogen gas is combustible and under ideal conditions a flame, may be had. Reference is made to U.S. Pat. No. 4,184,931. However, in that the burning velocity of hydrogen is 265-325 cm./sec. versus 37-45 cm./sec. of that of gasoline, the velocity of hydrogen is so great that the hydrogen ensuing from a nozzle will not under ordinary circumstances sustain a flame.

Therefore, to sustain a flame at a nozzle attached to a hydrogen generator the burning velocity of the hydrogen gas must be reduced.

It has been found that all water in its natural state whether it be tap water, well water, sea water, or fresh water is a saturate of ambient air. Further, in that ambient air contains a substantial amount of nitrogen, allnatural water will have entrapped therein nitrogen. Again, the percentage of nitrogen entrapped in natural water has been determined to be a fixed percentage and very uniform at seventeen (17%) percent -- irrespective of the source of the water or its impurities. Hence, a natural water gas analysis will show a seventeen percent of nitrogen relative to the hydrogen and the oxygen.

The nozzle connected to the collection chamber via an appropriate line, has a port opening of a controlled size and configuration, related to the size of the flame and the temperature and velocity of the burning gas mixture. To maintain the flame, that is to prevent blow-out, additional nozzles are included when the overall flame size is to be increased.

SUMMARY OF INVENTION

The present invention is for a hydrogen gas burner and comprises a combustion chamber for the mixture of hydrogen gas, ambient air, and non-combustible gasses. The mixture of gasses is ignited and burns at a retarded velocity rate and temperature from that of hydrogen gas, but at a higher temperature rate than other gasses.

The extremely narrow hydrogen gas mixture flame of very high temperature is restricted from the utilization means by a heat absorbing barrier. The flame strikes the barrier which in turn disperses the flame and absorbs the heat there from and thereafter radiates the heat as extremely hot air into the utilization means.

Positioned on the opposite side of the heat radiator/barrier is a hot air trap. A small portion of the radiated heat is captured and returned to the combustion chamber as non-combustible gasses. Valve means in the return line regulates the return of the non-combustible gas in a controlled amount to control the mixture.

The present invention is principally intended for use with the hydrogen generator of my co-pending patent application, supra; but it is not to be so limited and may be utilized with any other source of hydrogen gas.

OBJECTS

It is accordingly a principal object of the present application to provide a hydrogen gas burner that has a temperature controlled flame and a heat radiator/barrier.

Another object of the present invention is to provide a hydrogen gas burner that is capable of utilizing the heat from a confined high temperature flame.

Another object of the present invention is to provide a hydrogen gas burner that is retarded from that of hydrogen gas, but above that of other gasses.

Another object of the present invention is to provide a hydrogen gas burner that utilizes the exhaust air as non-combustible gas for mixture with the hydrogen gas.

Another object of the present invention is to provide a hydrogen gas burner that is simple but rugged and most importantly safe for all intended purposes.

Other objects and features of the present invention will become apparent from the following detailed description when taken in conjunction with the drawings in which:

BRIEF DESCRIPTION OF DRAWINGS

FIG. 1 is an overall crossectional view of the present invention in its most preferred embodiment.

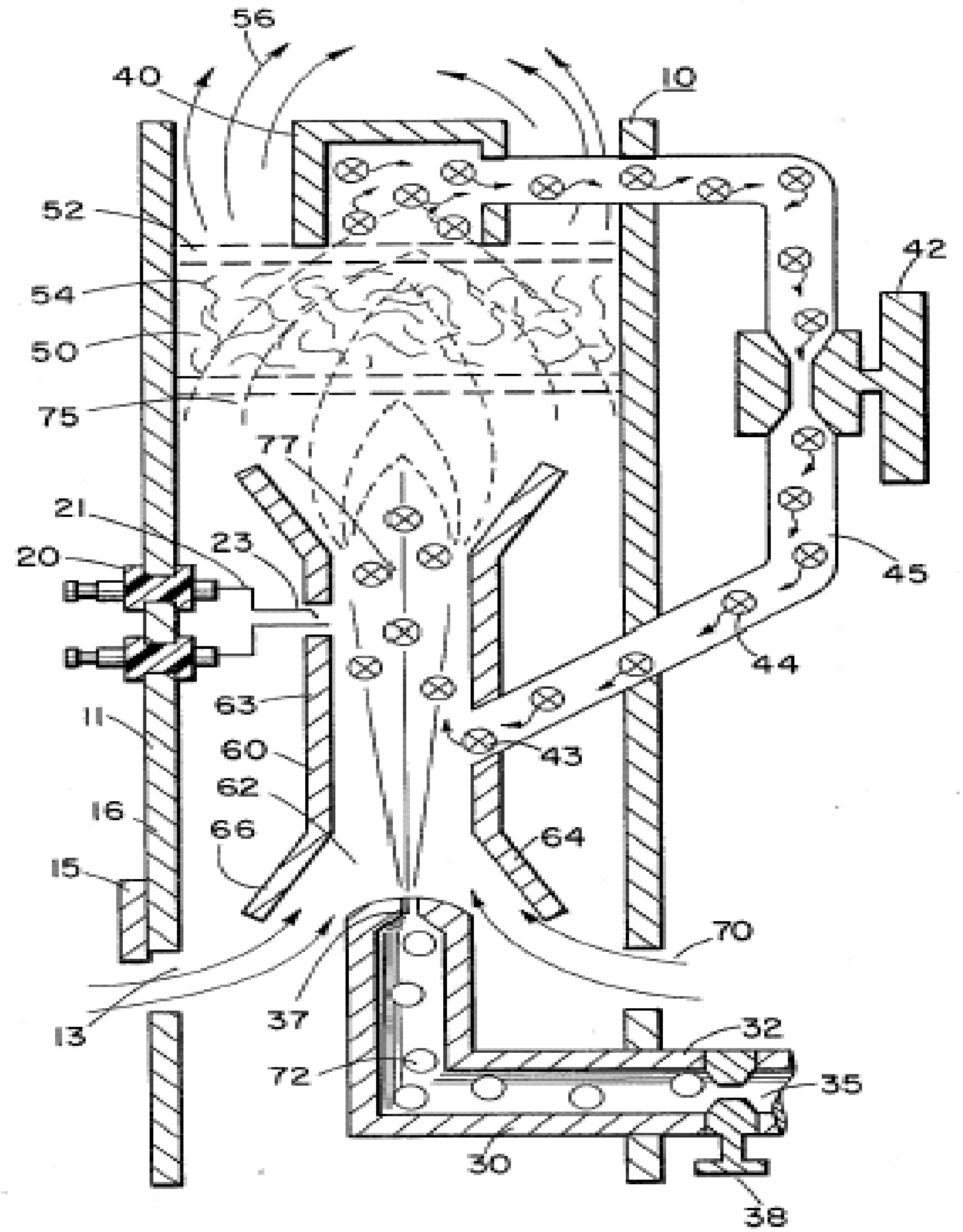

FIG. 2 is a graphical illustration of the burning of various standard fuels with that of hydrogen velocities.

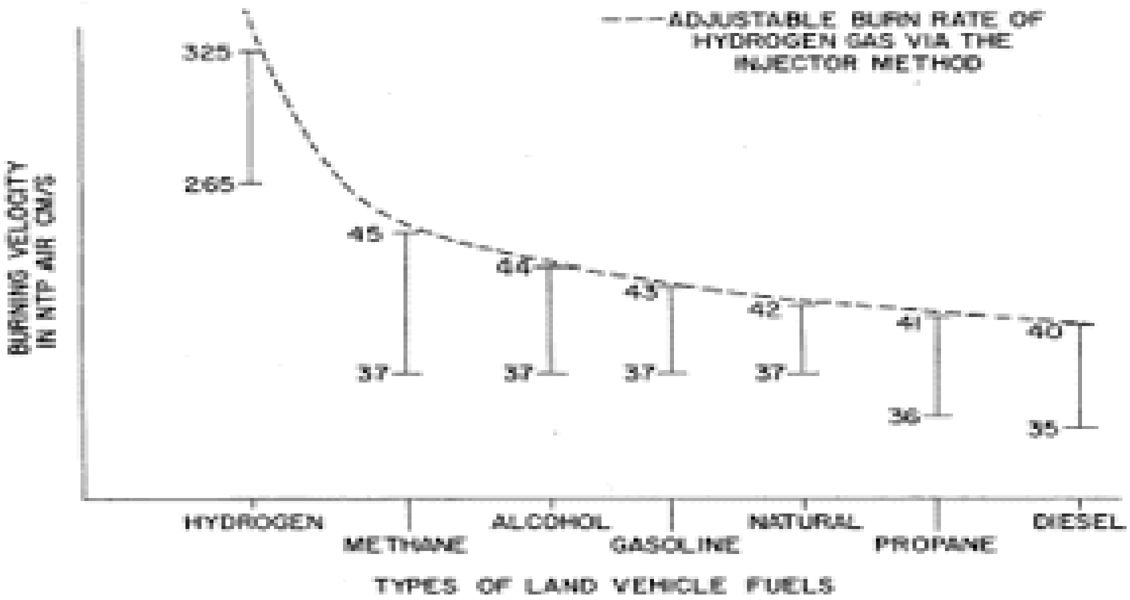

FIG. 2

DETAILED DESCRIPTION OF INVENTION

With particular reference FIG. 1 there is illustrated in a schematic crossectional the principals of the present invention.

The structure of the preferred embodiment comprises a housing 10, having an igniter 20 extending through the wall 11 thereof. A combustion chamber 60 positioned within the housing 10 has a first open end 62. A hydrogen gas 72 inlet 30 directs hydrogen gas via port 37 from a source 35 to the inlet 62 of the combustion chamber 68. Also directed to the same inlet 62, and assisted by flanges 64 and 66, is ambient air 70 entering through ports 13 in the housing 10.

Adjacent the opposite end of the combustion chamber 60 the gas mixture 75 is ignited by the ignitor 20 to produce flame 77.

The velocity of the flame 77 causes it to strike and penetrate the barrier/radiator 50. The barrier 50 is of a material, such as metallic mesh or ceramic material, to disperse therein the flame and in turn become saturated with heat. The flame 77 is of a size sufficient to be dispersed throughout the barrier 50, but yet, not penetrate through the barrier 50.

Radiated from the surface 52 of the barrier 50 is superheated air 56 (gasses) to be passed on to a utilization device.

Adjacent to surface 52 of barrier/radiator 50 is a hot air trap 40 with closed loop line 45 returning non-combustible gas 44 to the combustion chamber 60. Control valve 42 is intermediate the line 45.

In operation of the preferred embodiment hydrogen gas, 72, emitted from the nozzle 37 is directed to the combustion chamber 60. The flanges 64 and 66 on the open end of housing 63 of the combustion chamber 60 enlarges the open end of 62. In the enlargement ambient air from the opening 13 in the housing 10 is also directed to the combustion chamber 60.

The ambient air and hydrogen traverses the opening 43 and further mixes with the non-combustible gas 44 from the closed loop line 45 with the hot air trap 40.

The mixture of hydrogen gas 72, ambient air 70, and non-combustible gas 44, is ignited by the ignitor 20 having electrical electrodes 21 and 23. Upon ignition flame 77 ensues.

The mixture is controlled with each of three gasses. That is, the line 32 from the hydrogen source 35 has a valve 38 therein for controlling the amount of hydrogen 72 emitted from the nozzle 37. The opening 13 has a plate adjustment 15 for controlling the amount of ambient air 60 directed to the combustion chamber 60, and the closed-loop line has valve 42, as aforesaid, for controlling the amount of non-combustible gasses in the mixture.

It can be appreciated that the temperature of the flame 77 and the velocity of the flame 77 is a function of the percentage of the various gasses in the mixture. In a practical embodiment, the flame 70 temperature and velocity was substantially retarded from that of a hydrogen flame per se; but yet, much greater than the temperature and velocity of the flame from the gasses utilized in a conventional heating system.

To maintain a sufficient pressure for combustion of the hydrogen gas mixture with a minimum of pressure (for safety) and to limit blow-out, the nozzle 37 opening 39 is extremely small. As a consequence, if the hydrogen gas were burned directly from the nozzle 37, the flame would be finite in diameter. Further, its velocity would be so great it is questionable whether a flame could be sustained.

The mixing of ambient air and non-combustible gas does enlarge the flame size and does reduce its velocity. However, to maintain a flame higher in temperature and velocity than the conventional gasses, the size and temperature of the flame is controlled by the aforementioned mixture.

Therefore, to utilize the flame 77 in a present day utilization means, the flame is barred by the barrier 50. The barrier 50 is of a material that can absorb safely the intense flame 77 and thereafter radiate heat from its entire surface 52. The material 54 can be a ceramic, metallic mesh or other heat absorbing material known in the art. The radiated heat 56 is directed to the utilization means.

As aforesaid, the mixture of gasses that are burned include non-combustible gasses. As indicated in the above-noted co-pending patent applications, an excellent source of non-combustible gasses are exhaust gasses. In this embodiment, the trap 50 entraps the hot air 74 and returns the same, through valve 42, to the combustion chamber 60 as non-combustible gas.

With reference to FIG. 2 there is illustrated the burning velocity of various standard fuels. It can be seen the common type of fuel burns at a velocity substantially less than hydrogen gas.

The ratio of hydrogen with non-combustible oxygen gasses is varied to obtain optimum burning velocity and temperature for the particular utilization. Once this is attained, the ratio, under normal conditions, will not be altered. Other uses having different fuel burn temperature and velocity will be adjusted in ratio of hydrogen/oxygen to non-combustible gasses in the same manner as exemplified above.

Further, perhaps due to the hydrogen gas velocity, there will occur sunburnt gas at the flame 77 output. The barrier 50, because of its material makeup will retard the movement and entrap the unspent hydrogen gas. As the superheated air 77 is dispersed within the material 54, the unspent hydrogen gas is ignited and burns therein. In this way the barrier 50 performs somewhat in the nature of an after burner.

4.0.0.9. Start-up/Shut-down for a Hydrogen Gas Burner; US #: 4,465,455;

(August 14, 1984)

System for flame start-up/shut-down for a hydrogen gas mixture burner. An electrical probe igniter positioned adjacent the gas port outlet. On demand the igniter is actuated to heat and electrically heat a thermal switch. Responsive electronic controls actuate the appropriate valves and circuits for operational start-up. Upon the ignition of the generated hydrogen gas mixture, a second thermal probe is heated by the flame to deactivate the ignition and start-up circuits. After demand the second thermal probe cools and the circuit is restored for start-up again. A safety probe positioned in the flame is quiescent. In the event of demand time shut-down, the safety probe will activate the circuits for restart. If failure to start-up continues for a predetermined time, the safety probe circuit will effect permanent shut-down.

Inventors: Stanley A. Meyer (3792 Broadway Blvd., Grove City, OH 43123);
Apple. No.: 422875; Filed: September 24, 1982; Current U.S. Class: 431/27; 431/66; 431/70; 431/78; Intern’s Class: F23N 005/00 Field of Search: 431/27,46,66,67,69-71,72,74,78-80 123/3,1 A, DIG. 12 204/129

CROSS REFERENCES

n the non-electrolysis process disclosed and claimed in my co-pending patent application, Ser. No. 302,807, Filed: Sept. 16, 1981, For: HYDROGEN GENERATOR SYSTEM, for separating hydrogen and oxygen atoms from water, water is passed between two plates of similar non-oxidizing metal. The one plate has placed thereon a positive potential and the other a negative potential from a very low-direct-current power source. The sub-atomic action of the direct current voltage causes the hydrogen and oxygen atoms to be separated. The contaminants in the water are forced also to disassociate itself and may be collected or utilized and disposed of. This in turn lends the process to recombining the hydrogen and oxygen into pure water.

The direct current voltage applied to the plates is non-regulated and non-filtered. The direct current acts as a static force on the water molecules; whereas the rippling direct current voltage acts as a dynamic force. Pulsating the direct current further acts as a dynamic force and enhances considerably the splitting of the atoms from the water molecules. An increase in voltage potential further increases the hydrogen output. Certain plate arrangements and configurations with graphical illustration or relative efficiency are disclosed.

In my co-pending patent application, Ser. No. 422,495, Filed: Sept. 24, 1982, For: PERIODIC FLUSH SYSTEM FOR NON-ELECTROLYSIS HYDROGEN GENERATOR, there is disclosed control apparatus and electrical circuitry for periodically shutting down the hydrogen generator for flushing out the accumulated contaminants. The shut-down is in a sequential step-by-step operation. After the flushing is complete, the hydrogen generator is started up and, again, in a sequential step-by-step operation. Although the functions are numerous, the most critical is the opening and closing of the gas valves, and the switching on and off of the electrical circuitry to the exciter elements.

BACKGROUND

Heating and air environmental systems of the prior art have included sensing systems for flame-out, power loss or the like. These systems do provide some form of shut-down upon occurrence of a malfunction.

However, the prior art systems are either of gas, oil, or electrical. Although a gas or oil furnace will utilize electrical circuitry for a blower, the energy, whether gas, oil, or electric, is supplied either by a utility or in bulk. None of the prior art systems generate the energy that is used in the heating or air control system. Accordingly, no monitoring systems for the generator systems are known in the prior art, that are applicable heating or air control systems.

SUMMARY OF INVENTION

The present invention in its preferred embodiment provides a monitoring system and a start-up/shut-down circuitry and apparatus for a hydrogen gas burner. The system is distinctive in that the hydrogen generator is a demand system; that is, hydrogen gas is generated only when the thermostat (or other gauge) dictates the energy is needed. Accordingly, the start-up is the start-up of the energy generating system and thereafter starting the igniter to ignite the hydrogen gas mixture. Further, although the prior systems start-up on demand; none have a need for periodic shut-down.

The present invention is a start-up/shut-down system for an energy generator and for the utilization of the energy generated. The function in addition to demand is periodic. Then, again, the same procedure is followed upon the occurrence of malfunction.

The apparatus comprises an igniter in the flame path that upon actuation heats a thermal probe that controls the electrical/electronic circuitry for opening and closing the various controls and switches. Another probe deactivates the ignition and start-up upon completing the function. A safety probe positioned in the flame path is time controlled to start-up in the occurrence of a flame-out, if failure occurs in the attempt to retract within a given period of time the entire system is shut-down.

OBJECTS

It is a principal object of the present invention to provide a monitoring and control system for start-up and shut-down of an energy generator system.

Another object of the present invention is to provide such a control system that is operable upon demand, periodically operable, and operable upon occurrence of a malfunction.

A further object of the invention is for a monitoring and control system that distinguishes between an accidental flame-out and a flame-out caused by malfunction of the system.

A further object of the invention is for a monitoring and control system that provides a restart function upon accidental flame-out.

Other objects and features of the present invention will become apparent from the following detailed description when taken in conjunction with the drawings in which:
BRIEF DESCRIPTION OF DRAWINGS

FIG. 1 schematically depicts a preferred embodiment of the invention of a hydrogen gas mixture burner incorporating the features of the invention.

FIG. 1

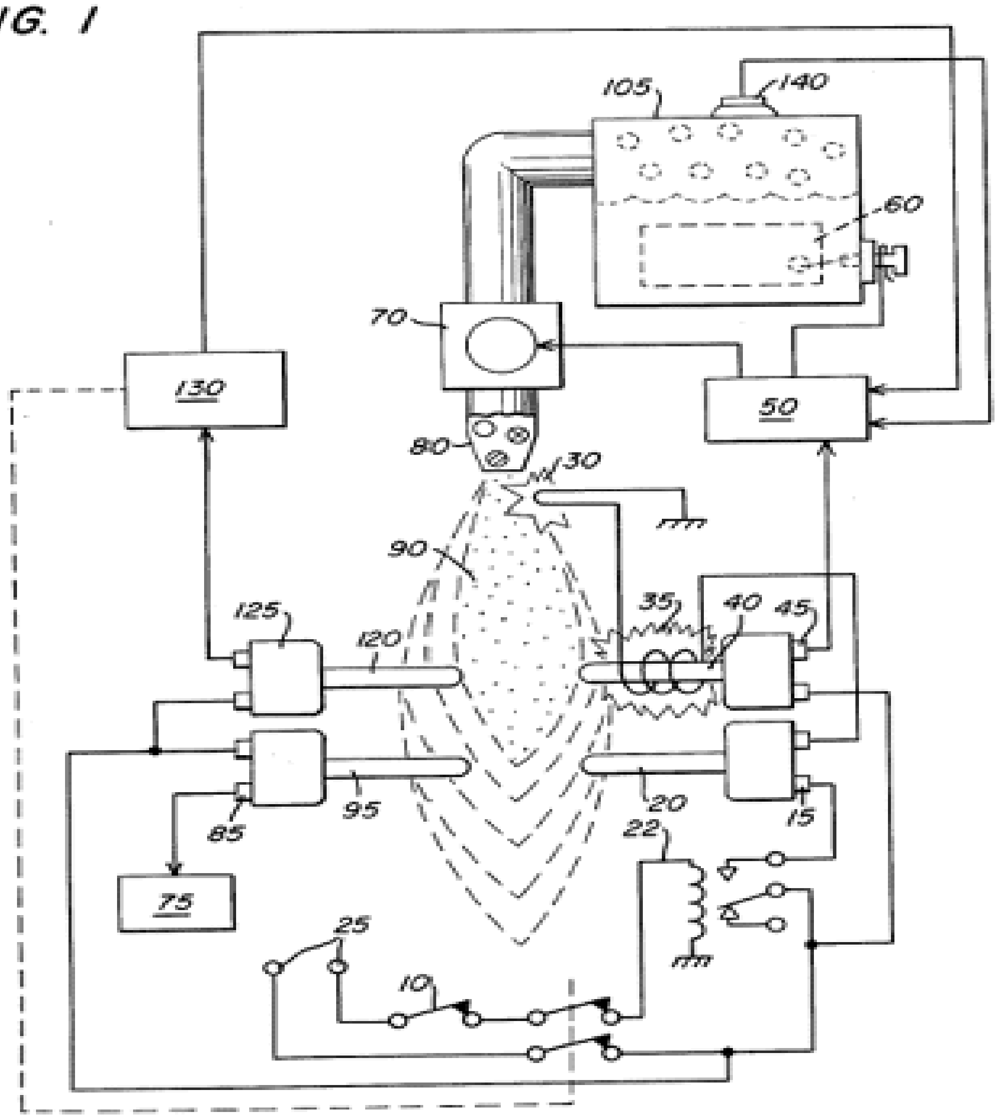

FIG. 2 is a schematic block diagram of the preferred embodiment in a complete operational generator system.

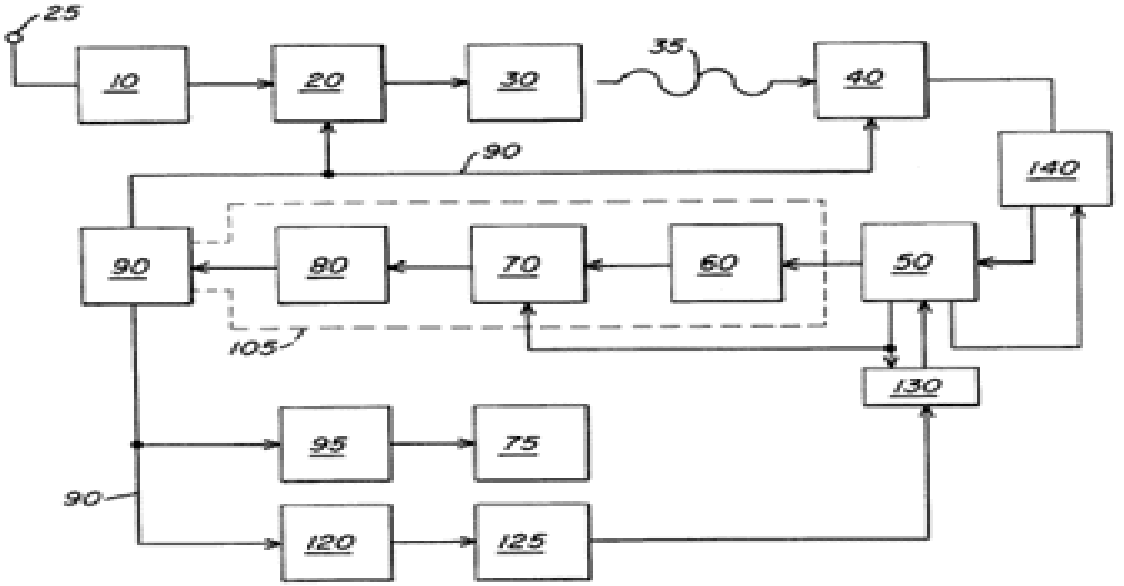

FIG. 2

DETAILED DESCRIPTION OF DRAWINGS

With reference to FIG. 1 there is a illustrated schematically the mechanical/electrical apparatus of the system of the preferred embodiment of the invention taken in conjunction with the hydrogen generator of my co-pending patent application, supra. In FIG. 2 the electrical circuitry and actuating valves and the like are depicted in a sequential schematic block type of arrangement.

Referring to FIG. 1, together with FIG. 2, the preferred embodiment of the present invention may now be described. The thermal probe switch 20, before start-up, is in a normally closed position. Upon the demand for energy, dictated by the thermostat 10 control, the relay 22 is closed, applying electrical power from source 25 to the electrical spark igniter 30 through the closed thermal probe 20. Upon the spark igniter 30 attaining the appropriate temperature, the radiant heat from coil 35 heats the thermal probe 40.

As the thermal probe 40 heats, the normally open switch 45 closes and in turn actuates the electrical control circuit 50. The control circuit 50 closes the circuit to apply electrical power to the exciters 60 in the non-electrolysis hydrogen generator 105.

In sequence, and upon attaining appropriate pressure from the gasses generated as indicated by pressure valve in the hydrogen generator 105, also illustrated in FIG. 2 in dotted line block, the gas outlet valve 70 is opened, permitting gas to be expelled through a nozzle assembly 80. Upon the gas contacting the heated electrical spark igniter 30, the hydrogen gas mixture, expelled from the controlled port opening in nozzle assembly 80 is ignited into a continuous extremely high temperature flame 90.

The thermal probe 95 immediately begins to heat and after attaining the predetermined temperature the fan assembly 75 is actuated by the closure of relay 85.

The flame 90 having been ignited and burning, causes the thermal probe 20 to become heated and thereby opening its relay 15. In turn, the voltage applied to the electrical spark igniter 30 is terminated by the open relay 15.
Upon the demand from the thermostat 10 being reached the relay 22 is opened thereby cutting off the voltage 25 to the thermal probe switch 20. Sequentially the electrical control circuit 50 opens the circuit providing voltage to the exciters 60; thereby shutting gas outlet valve 70 to terminate the flame 90. Thereafter the circuit is ready for start-up again upon demand from the thermostat 10, as aforesaid.

A safety probe 120 is also positioned in the flame 90. During operation of the system under demand from the thermostat control 10, the probe 120 will remain heated. In this condition the attendant relay 130 is inoperative. If for some reason the flame 90 should be extinguished during the demand period the safety probe 120 will quickly cool and in sequence the attendant relay 130 will open. Relay 130 connected to relay 22 in the power circuit will act in place of the demand thermostat 10, that is, the relay 130 will override the demand thermostat 10. The circuits and functions will follow as above-described for start-up in the event the flame-out was accidental.

The safety control system further includes a timer circuit and thermostat 125 that will permit the probe 120 to attain its temperature within a given period of time. If the probe 120 does not attain its temperature the same start-up procedure will follow again, within a given period of time. The timer 125 is so set that unless the probe 120 attains the appropriate temperature within the given period of time the entire circuitry is shut down permanently. This denotes a major failure in the system and not a simple flame-out.

Finally, in the unlikely event of pressure build-up upon malfunction, there is provided a safety relief valve 140.

4.0.1.0. Gas Electrical Hydrogen Generator; US #: 4,613,304;

(September 23)
A hydrogen gas generator system for converting water into hydrogen and oxygen gasses, in combination with a magnetic particle accelerator for voltage/current electrical potential generation. The hydrogen gas generator encompasses an array of plates immersed in a housing and having natural water pass there through. Direct current, voltage dependent/current limited, potential applied to the plates causes the hydrogen/oxygen gasses to disassociate from the water molecule. The upper portion of the container is a hydrogen/oxygen mixture collection chamber for maintaining a predetermined gas pressure. There is introduced into the hydrogen/oxygen collection chamber, from a source, a substantial quantity of permanently magnetically polarized particles. Attached to the gas collection chamber outlet is a non-magnetic, non-conductive closed loop of tubing. The polarized magnetic particles are caused to circulate in the closed loop tubing by an electrical and/or mechanical pump. A pick-up coil wound around the tubing will have a voltage induced therein as the magnetic field of the polarized magnetized gas particles pass there through. The induced voltage has utilization as an electrical power source. In

that the hydrogen/oxygen gasses are not polarized the gasses will seek a pressure release via an outlet. The hydrogen and oxygen gasses may be utilized such as in a burner system.

Inventors: Meyer; Stanley A. (3792 Broadway, Grove City, OH 43123) Apple. No.: 668577 Filed: November 5, 1984 Current U.S. Class: 431/354; 204/155; 976/DIG427; Intern’s Class: F23D 014/62 Field of Search: 431/258,2,6,12,356,354 204/155,129,72,243 M, DIG. 5, DIG. 6,126,129

References Cited [Referenced By]

U.S. Patent Documents #:

3,969,214 Jul., 1976 Harris 204/129.
4,255,403 Mar., 1981 Mayer et al. 204/155.
4,338,919 Jul., 1982 Hwang 126/436.
4,369,102 Jan., 1983 Galluzzo et al. 204/129.
4,421,474 Dec., 1983 Meyer 431/354.
4,465,964 Aug., 1984 Cover 204/129.

CROSS REFERENCE AND BACKGROUND

There is disclosed in my co-pending patent application, filed, Sept. 16, 1981, U.S. Ser. No. 302,807, for Hydrogen Generator, a hydrogen gas generating system. The apparatus comprises a pressure tight enclosure for a water bath having immersed therein an array of plates. The hydrogen and oxygen atoms are disassociated from the water molecule by the application of a non-regulated, non-filtered, DC voltage/current limited potential to the plates having natural water pass there between. The plates, as well as the housing, are non-oxidizing, non-corrosive, non-reactive, and of similar material. The upper portion of the container is a hydrogen/oxygen storage chamber for maintaining a predetermined level of pressure.

In my co-pending patent application, Ser. No. 411,977, for, Controlled Hydrogen Gas Flame, filed, Aug. 25, 1982, there is disclosed a hydrogen gas burner. The nozzle in the burner is connected to the storage area or gas collection chamber via an appropriate line. The port in the nozzle has an opening of a controlled size and configuration, related to the size of the flame and the temperature and velocity of the burning gas mixture.

Also, in my co-pending patent application, Ser. No. 367,051, for Electrical Particle Generator, filed Apr. 4, 1982, there is disclosed an electrical generating system that is utilized in combination with the aforesaid hydrogen/oxygen generator.

OBJECTS

It is a principal object of the present invention to provide a hydrogen gas electrical generator capable of producing a voltage/current much greater in magnitude hereinto fore possible.
Another object of the present invention is to provide such a hydrogen gas electrical generator utilizing magnetized elements and wherein the magnetized particles are accelerated in a closed loop tubing to induce a voltage/current in a pick-up winding.

Another object of the present invention is to provide such an electrical generator in combination with a controlled output hydrogen generator.

Another object of the present invention is to provide such an electrical generator that utilizes readily available components that are adaptable to a simplified embodiment.

SUMMARY OF INVENTION

The present invention utilizes the basic principle of inducing a voltage current in a pick-up winding by passing a magnetic element there through in combination with a hydrogen gas generator. The particle accelerator utilizes the principles of my co-pending application Ser. No. 367,051, and the hydrogen generator is particularly that of my co-pending patent application, Ser. No. 302,807.

The hydrogen gas generator encompasses an array of plates immersed in housing having natural water pass there through. Direct current, voltage dependent/current limited, potential applied to the plates causes the hydrogen/oxygen gasses to disassociate from the water molecule. The upper portion of the container is a hydrogen/oxygen collection chamber for maintaining a predetermined gas pressure including an outlet means.

There is introduced into the hydrogen/oxygen collection chamber from a source a substantial quantity of permanently magnetically polarized particles. The particles dispersed in the collection chamber will superimpose themselves on the generated hydrogen/oxygen gasses. Attached to the gas collection chamber outlet is a non-magnetic/non-conductive closed loop of tubing. The polarized magnetic particles are caused to circulate in the closed loop tubing by an electrical and/or mechanical pump. Due to the alignment and the attraction of the particles, the particles movement through the loop is continuous. A pick-up coil wound around the tubing will have a voltage induced therein as the polarized magnetized gas particles pass there through. The induced voltage has utilization as an electrical power source. In that the hydrogen/oxygen gasses are not polarized the gasses will seek a pressure release via an outlet. The hydrogen and oxygen as may be utilized such as in a burner system.

Other objects and features of the present invention will become apparent from the following detailed description when taken in conjunction with the drawings in which:

BRIEF DESCRIPTION OF DRAWINGS

FIG. 1 is a simplified illustration of the principles of the invention, in cross-section showing the electrical particle voltage/current generator together with the hydrogen generator in a preferred embodiment.

FIG. 1

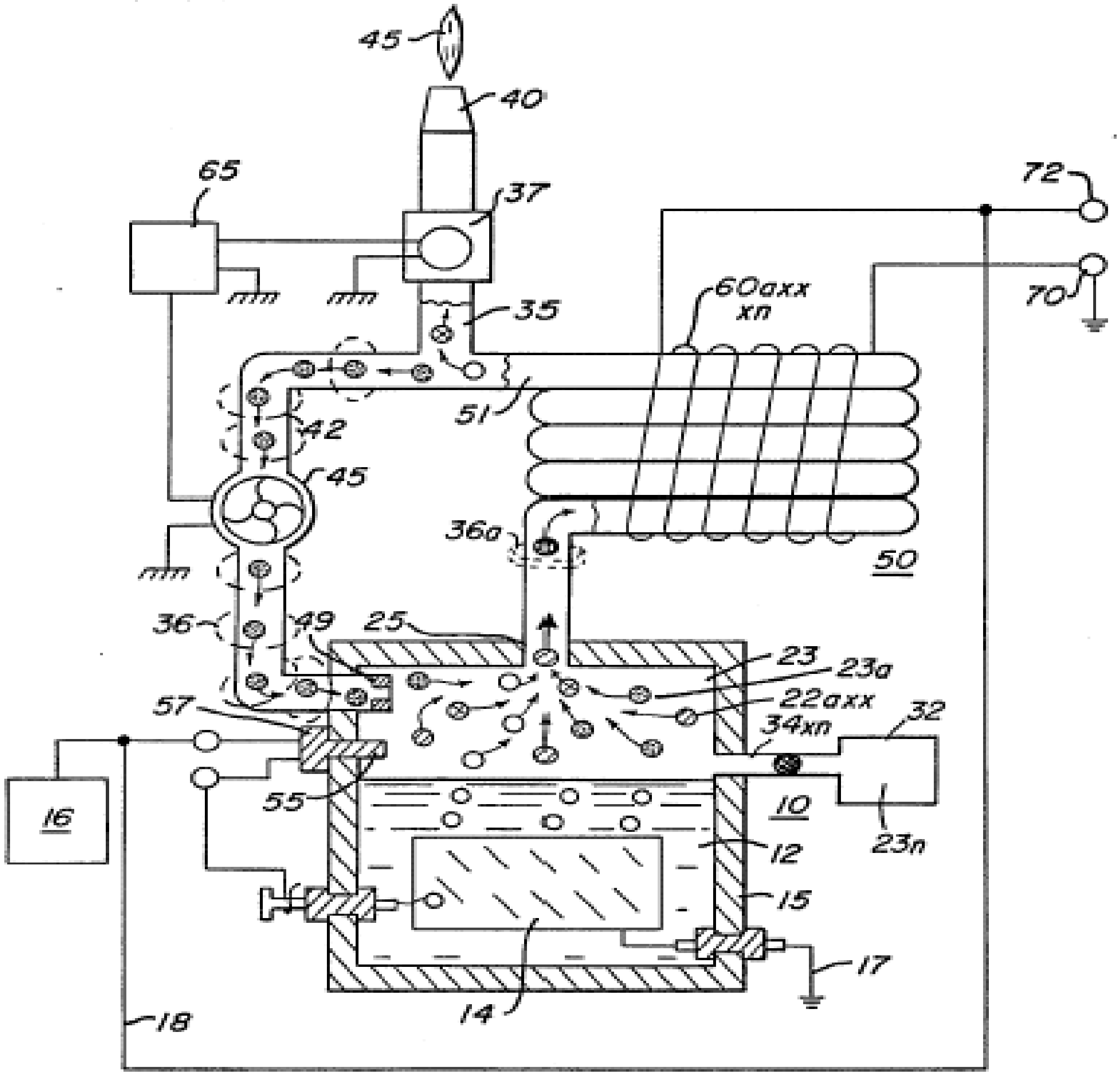

FIG. 2 is a magnetic particle tubing, in an electrical schematic circuit arrangement, illustrating the induced direct and alternating current voltage.

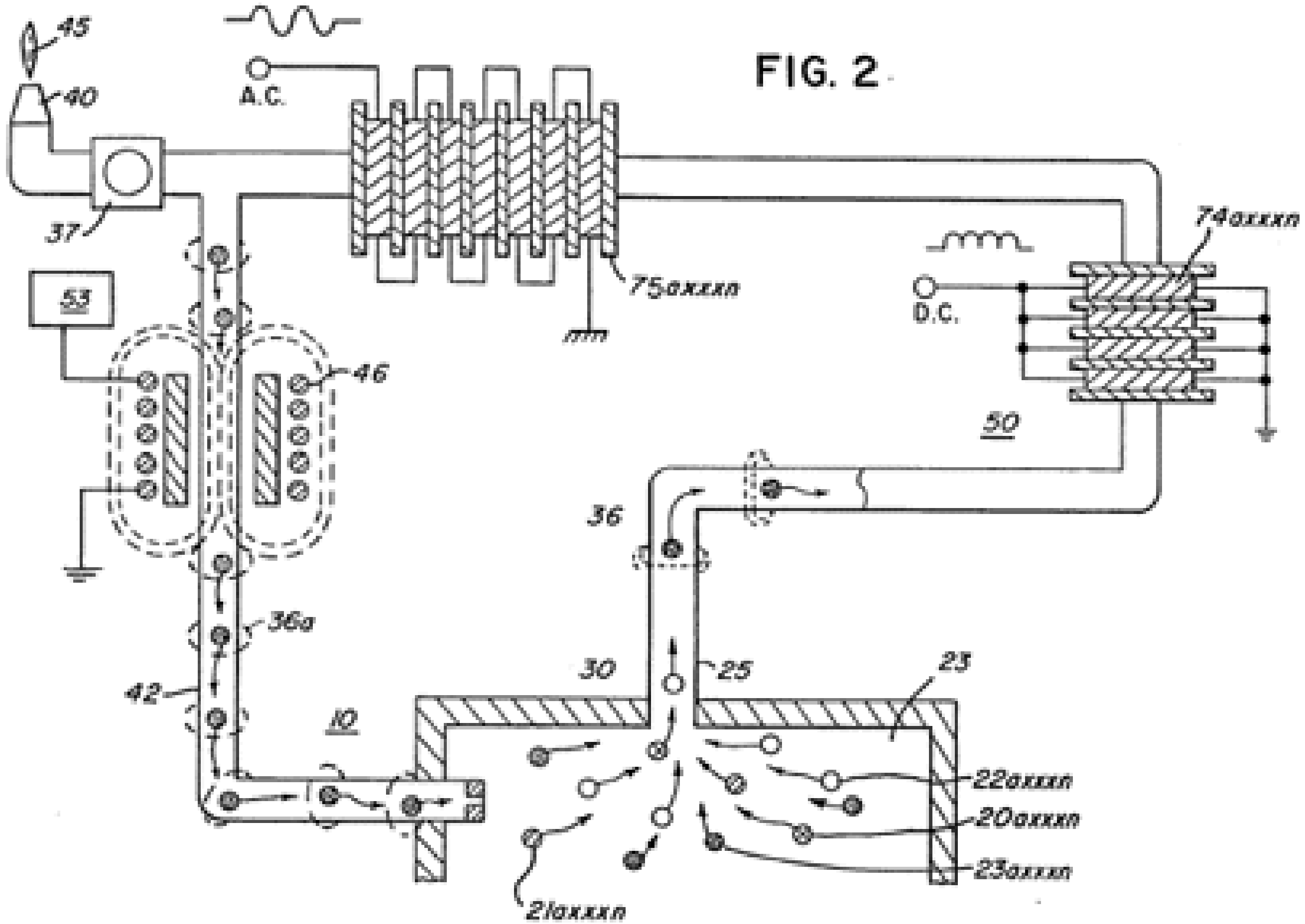

FIG. 2

DETAILED DESCRIPTION OF DRAWINGS

Referring now to FIG. 1 there is illustrated the invention of the preferred embodiment in a simplified schematic arrangement. The generator 10 comprises an airtight pressure housing 15 of non-corrosive, non-oxidizing, non-reactive material. The housing 15 is filled with natural water of a predetermined level. Immersed in the water 12 is an array of plates 14.

In the preferred embodiment of the invention of FIG. 1, as disclosed in my co-pending application Ser. No. 302,807, the plates 14 are in pairs of similar non-corrosive, non-oxidizing, non-reactive material. A variable voltage source 16 having circuitry to restrict the amperage comprises additionally a pair of terminals connecting a positive and negative voltage to alternate plates 14 in the pair. The applied potential to the plates causes the hydrogen and oxygen atoms to disassociate themselves from the water molecule.

The released hydrogen gas depicted as particles 20a xxx 20n and oxygen gas particles 22a xxx 22n are collected and stored in the chamber 23 together with other released gasses such as nitrogen 21a xxx 21n.

The loop arrangement of tubing 50 has wound thereon a substantial number of turns 60a xxx 60n in a winding 60. The number and size of the turns is related to the tubing configuration and voltage/current output as set forth in my co-pending application. The magnetically charged particles travelling with a high accelerated velocity pass through the tubing 50. As the magnetically charged particles pass through the core of the winding 60, their magnetic field 36a traverses the windings 60a xxx 60 n, and induces a voltage/current therein. The output voltage/current is utilized via terminals 70-72.

As aforesaid, the storage chamber 23 is maintained at a predetermined pressure; and once the pressure is attained the hydrogen/oxygen gasses will be expelled into outlet line 25 with a substantial velocity. The pressure released gas mixture continues through the entire loop arrangement of tubing 50.

Upon demand for the flame, (such as for heat) from demand circuit 65, the valve 37 is opened causing the gas mixture circulating in closed loop 50 to be released to the nozzle 40 and provide the flame 45 upon ignition.

The hydrogen/oxygen gasses having the particles superimposed therein will separate and be pressure released via tubing 35 to the nozzle 40. In that the magnetic fields of the polarized particles provide an attractive force, the motion of the polarized particles through the closed loop 50 will be greater than the gas mixture pressure release. That is, with the valve 37 open the hydrogen/oxygen gasses will separate themselves from the polarized particles. The hydrogen/oxygen gasses will go via 35 to nozzle 40 whereas the polarized particles will continue to circulate through the closed loop. The chamber 23 further includes switch means 57 to shut off the electrical source 16 to the generator system when the pressure in the chamber 23 sensed by pressure gauge 55, achieves a predetermined level.

In the operation of the hydrogen generator as a burner, as disclosed in the co-pending patent application Ser. No. 411,797, the outlet tube 25 is connected directly to the nozzle 40 to obtain the flame 45 upon ignition. The operation of the gas burner is not altered in the present invention.
The housing 15 further comprises an inlet 34 having source 36 connected thereto. This permits the entry into the chamber 23 of a substantial amount of permanently polarized magnetized particles 36a xxx 36n.

The polarized particles 36a xxx 36n upon entry into the chamber 23 superimpose themselves on the hydrogen/oxygen gasses.

Upon demand, as set forth below, the opening of the valve 37 causes a pressure differential with the gasses collected in the chamber 23. In this way the gasses having the polarized particles superimposed thereon will be pressure released and caused to enter the closed loop 50.

Once in the closed loop the accelerator 45 will maintain the gasses and the superimposed polarized particles in a continuous circulating motion through the closed loop 50.

Connected to the outlet tubing 25 is a series of loops of non-magnetic tubing 50. The tubing in its loop configuration can be any one of the arrangements illustrated in my co-pending patent application, supra. The opposite end 51 of the loop 60 tubing is connected, via a Y connection, either to the burner assembly 40, via line 35, or a return line 42 to the storage 30. chamber 23.

It is to be appreciated that a miniscule amount of polarized particles will be carried into the outlet 35 as well as hydrogen/oxygen gas continuing to circulate through the closed loop. In the event the amount, of polarized particles expended should become significant, the quantity of particles will be replenished from source 32.

Upon satisfaction of the demand, the valve 37 will close and thereby cause the gas mixture circulating through closed loop 50 to return to the collection chamber 23 via close loop line 42. In this arrangement the pump 45 will continue to be operative and cause a continuous circulation of the polarized particles through the closed loop. If the gas in the collection chamber is of the preset pressure, as sensed at gauge 55, the voltage via terminal 16 will be cut-off discontinuing the generation of gas.

With hydrogen/oxygen gas mixture demand circuit quiescent, the polarized particles will not be separated from the hydrogen/oxygen gasses at the outlet 35. The pump 45 is a continuous pump and thereby continuous to circulate through the closed loop 50 the polarized particles superimposed on the gas mixture from chamber 23.

The magnetized particle source 32 is operative to transform a material into minute vapor particles that are capable of being permanently polarized magnetically. The vapor, in the nature of a gas will superimpose on the hydrogen/oxygen gas.

With particular reference to FIG. 2 there is illustrated, partly in schematic and partly pictorial the preferred embodiment of the invention.

Initially is noted that the pump 45 of FIG. 1 has been replaced by the electrical particle accelerator 46. The accelerator 46 is a non-mechanical/no moving part element and therefore not subject to wear. It is to be recalled, polarized particles have placed there on a magnetic field potential. Hence, as the magnetized particles approach the accelerator 46 they are attracted and as they pass the center of the accelerator and they are propelled there through.

Other propulsion means in lieu of the pump 45 of FIG. 1 or the accelerator 46 of FIG. 2 may be utilized.

As noted in the aforesaid co-pending patent application, the induced current/voltage can be, at the output 70-72, either direct current, or alternating current, or both. With reference to FIG. 2, the simplified schematic illustrates a direct current voltage 4 parallel winding and an alternating current 75 in serial winding.

The number of coils 74a xxx n of direct current windings of coil 74 will determine the ripple frequency of the direct current voltage and its amplitude. Similarly, the number of alternating current windings 75a xxx n will determine the alternating frequency of the alternating current voltage and its amplitude.

More importantly, the aforesaid ripple frequency of the single polarity voltage of coil 74 and alternating frequency of the alternating voltage of coil 75 can be altered, varied, and controlled. That is, the frequency is a function of the number of discrete windings of the coils times the velocity of the gas per second. The velocity of the polarized particles in tubing 50, in turn, is varied by varying the magnitude of the input voltage to the accelerator 46. Simply an arithmetical increase in acceleration of the polarized particles results in a geometrical increase in frequency an amplitude of the output voltage from either the direct current winding 74 or the alternating current winding 75.

In the co-pending application, supra, for the Electrical Particle Generator, the accelerator input voltage source 53 is intended to comprise circuitry to provide alternate forms of electrical power, such as direct current, alternating current, direct current pulsing, and variable voltage. The output taken at the pick-up windings is related to the input voltage in shape, magnitude and in waveform.

With reference to FIG. 1 and with continued reference to FIG. 2, the hydrogen/oxygen generator 10, has applied to the plates 14 a direct current voltage. The voltage applied to the plates 14 from power supply 16, depending upon the utility of the generator, may be a variable voltage. For instance, if it is desired to vary the intensity of the flame 45, the voltage at the plates 14 will be varied.

Further, as specifically repeated, the voltage is current limited. Accordingly, the power source 16 will provide circuitry for varying the voltage to the plates 14 and for restricting the amperage to a legible value relative to said voltage.

In a self-sustaining embodiment of the gas electrical generator, a portion of the output at the voltage taps 70-72 of the pick-up coils is directed back to the power supply 16. In that the total power requested to be applied to the plates 14 is relatively low, an insignificant portion of the output at taps 70-72 is required for sustained operation of the generator.

The electrical particle portion of the electrical gas generator of the present invention is operative continuously as set forth above. Hence the output voltage at taps 70-72 will be available to the power supply 16 whenever a demand for gas generation is made.

4.0.1.1. Gas Generator Voltage Control Circuit; US #: 4,798,661;

(January 17, 1989),

A power supply in a system utilizing as a source of fuel a generator for separating hydrogen and oxygen gasses from natural water and having the capabilities to control the production of gasses by varying the amplitude of the voltage and/or the pulse repetition rate of the voltage pulses applied to a pair of plate exciters in a vessel of natural water, comprising a sequence of circuitry operative to limit the current of a DC potential to a minimum value relative to the magnitude of the voltage applied to the plate exciters. The circuits each function up to a given magnitude of voltage to inhibit and curtail the flow of electrons from the plate exciter having the negative voltage potential applied thereto. The first circuit operative from a first magnitude of voltage comprises converting the voltage potential applied to the plate exciters to a Unipolar pulse voltage DC of a repetitive frequency. The next circuit varies the duty cycle of the Unipolar pulse voltage DC; followed by rearranging the application of the voltage to the exciters to individual exciters each having the voltage applied thereto independently of the other plate exciters in the generator. The next circuit comprises an electron inhibitor that prevents the flow of electrons; the circuit being in the terminal line between the negative plate exciter and ground. In those applications of the generator wherein excessively high voltage is to be applied to the plate exciters for a very high yield of gasses, a second electron inhibitor of a unique structure is serially connected with the first electron inhibiter. The second named inhibiter having a relatively fixed value and the first inhibiter connected in series is variable to fine tune the circuits to eliminate current flow.

In a generator for producing a mixture of hydrogen and oxygen and other dissolved gas from natural water which generator includes at least a pair of plate exciters within a water containing vessel, a variable voltage source for applying a pulsating predetermined potential difference between the plates and wherein the rate of production of the mixture of gasses is controlled by varying at least one of the amplitude of the voltage and the pulse repetition rate of the pulsating potential difference applied to the plate exciters.

The variable voltage source includes a means for restricting the current flow between the plate exciters to a minimum value relative to a predetermined potential difference applied to the plates, the improvement in the means for restricting said current flow comprising: variable voltage source means for converting an input voltage potential to Unipolar DC voltage pulses that are applied to the exciter plates and have a pulsating potential difference when measured from an arbitrary ground.
There is also a means for regulating the voltage pulses in a repetitive frequency to inhibit the current flow caused by electron leakage between the plate exciters resulting from the amplitude of the applied voltage potential whereby said current flow is inhibited from exceeding a first minimum level.

The input voltage is an alternating current voltage and said circuit for converting said alternating current voltage to Unipolar DC voltage pulses further comprises, means for varying the frequency of said alternating current voltage input to further inhibit electron leakage upon increasing the amplitude of the voltage applied to the plate exciters to a second level.

The variable voltage source is an alternating current voltage for converting alternating current voltage to unipolar DC voltage pulses also comprises a transformer having primary and secondary windings, and a rectifier circuit connected across said secondary windings.
The transformer further includes variable inductive means for varying the output frequency of the voltage induced in said secondary winding to further inhibit electron leakage upon increasing the amplitude of the voltage applied to the plate exciters to a third level.

The variable voltage source also has a pulse forming circuit for varying the duty cycle of the unipolar DC voltage pulses to a predetermined repetition rate to inhibit electron leakage upon increasing the amplitude of the voltage applied to the plate exciters to a fourth level.

A means is further provided to vary the amplitude of the duty cycle pulses to vary the rate of production of the hydrogen and oxygen gasses, further comprising means for correlating the repetition of said duty cycle pulses with the amplitude of said duty cycle pulses to provide an average amplitude pulse below the amplitude level causing electron leakage.

The variable voltage source of the generator of claim 5 wherein said varying of the duty cycle of said unipolar DC voltage pulses to inhibit electron leakage is a periodic varying and aperiodic varying.

It also has circuit means for varying the amplitude of said duty cycle pulses from a first gradient level to a second gradient level, and a means for varying the duty cycle pulses to a plurality of distinctive gradient levels.

It also has circuit means for no uniformly varying the duty cycle pulses to a plurality of distinctive gradient levels.

The unipolar DC. voltage pulses in the duty cycle is non-repetitive.

Varying of the duty cycle of said pulses to inhibit electron leakage comprise circuit means for varying the amplitude from a first gradient minimum level to a plurality of gradient levels. Gradient levels of amplitude represent demand functions for a utilitarian device.

The circuit further comprises means for varying the frequency of the alternating voltage including a transformer having a primary winding and a secondary winding, and wherein said means is connected to the input of the primary of said transformer.

A pair of plate exciters are spatially positioned in natural water with a physical distance there between of a wavelength to that of a particular frequency of the voltage back and forth motion between said exciter plates, and means for varying said unipolar DC voltage pulses in frequency to match the wavelength distance of the pair of plate exciters.

The pair of plate exciters are spatially positioned in the water with a physical distance there between of a wavelength to that of a particular frequency of the voltage back and forth motion between said exciter plates, and pulse forming means for varying the duty cycle of said unipolar DC voltage; and a means for varying said duty cycle pulse in repetition rate to match the wavelength distance of said pair of plate exciters.

The pair of plate exciters are spatially positioned in water with a physical distance there between of a wavelength to that of particular frequency of the voltage back and forth motion between the exciter plates, and pulse forming means for varying the duty cycle of said unipolar DC voltage ; and a means for varying the duty cycle pulse in repetition rate to match the wavelength distance of the pair of plate exciters, and means for varying the amplitude of said duty cycle pulses to a minimum level to maintain resonance between said pair of plate exciters; and a means for varying the repetition frequency of said unipolar DC voltage pulses to vary the rate of generation of gasses.
The negative plate has a ground and an electron inhibiting resistive element connected between the negative plate and ground, providing a means to vary the resistive element with a variable resistor to maximize electron inhibition.

The variable voltage source of the generator of claim 28 wherein the amplitude of the voltage induced in the secondary is dependent on the number of turns in said secondary winding.

There is a circuit component means for converting an input voltage to unipolar DC voltage pulses of a repetitive frequency to inhibit electron leakage upon varying the amplitude of the applied voltage above a first predetermined amplitude level, a pulse forming circuit for varying the duty cycle of said unipolar DC voltage pulses to a predetermined repetition rate to inhibit electron leakage upon varying the amplitude of the voltage beyond a second level of amplitude circuit means for varying the frequency of said unipolar DC voltage pulses to inhibit electron leakage upon varying the amplitude of the applied voltage above a third predetermined level, a ground and a variable resistive element connected between the plate exciter having a negative voltage applied it and ground to limit electron leakage upon varying the amplitude of the voltage beyond a fourth level of amplitude, a pair of plates and a resistive material sandwiched there between connected to said plate exciter having said negative voltage connected thereto and the end of the variable resistor opposite to the ground connection, to limit electron leakage upon varying the amplitude of said voltage applied to said plates be a fifth level.

BACKGROUND AND CROSS REFERENCES

The phenomena of physics was discovered that the hydrogen atoms in the water molecule will take on a positive charge whereas the oxygen atom in the water molecule takes on a negative charge when the water molecule is exposed to an electrical voltage. The two hydrogen positive charged atoms and the one oxygen negative charged atoms, in magnitude, are in a state of equilibrium.

In my co-pending patent application, Ser. No. 302,807, now abandoned for Hydrogen Generator, the above noted principle of polarization is utilized. The simultaneous application of a positive voltage pulse to one plate exciter and a negative polarized voltage pulse to the other plate exciter in a vessel of natural water, will form polarized voltage electrical zones around the plates of a respective polarity. The positive voltage plate exciter zone attracts the negative charged atoms of the water molecule and the negative voltage plate exciter zone attracts the positive charged hydrogen atoms of the water molecule.

The opposing attractive forces causes the hydrogen and oxygen atoms to disassociate from the water molecule; and thereby, release the hydrogen and oxygen gasses. In that natural water is utilized in the generator and that natural water contains a considerable percentage of ambient air, ambient air gas will also be released similarly to the oxygen and hydrogen gasses from the water molecule.

The above described process is apparently not a chemical reaction process such as in Faraday's Laws. In that process electrolyte is added to distilled water to draw current. The reaction of the electrolyte with that of the corrosive electrodes releases the hydrogen and oxygen gasses.

Characteristically, Faraday's Laws requires:

"The rate of decomposition of an electrolyte is dependent on current and independent of voltage. xxx will depend on current regardless of voltage, provided the voltage exceeds a minimum for a potential."

In the voltage dependent/current restricted process of my co-pending patent application, the disassociation of the hydrogen and oxygen atoms from the water molecule, is attributed to the physical force attraction of the polarized zones adjacent the plate exciters on the charged hydrogen and oxygen atoms having a polarity opposite to that of the polarized zone.

This physical force is exemplified in my co-pending patent application, Ser. No. 422,594, filed Sept. 24, 1982, now abandoned for Hydrogen Generator Resonant Cavity, wherein the principle of physics that physical motion of an element between spatially positioned structures will resonate if the distance between the structures, in wavelengths, is matched to the frequency of the force causing the physical motion, is utilized in a practical and useful embodiment.

The DC voltage with current restricted, applied to the pair of plate exciters spatially positioned in a vessel of natural water, is pulsed. The pulsing voltage on the plate exciters applying a physical force is matched in repetition rate to the wavelength of the spacing of the plate exciters. The physical motion of the hydrogen and oxygen charged atoms being attracted to the opposite polarity zones will go into resonance. The self-sustaining resonant motion of the hydrogen and oxygen atoms of the water molecule greatly enhances their disassociation from the water molecule.

In my co-pending patent application, Ser. No. 411,977, filed Aug. 25, 1982, for Controlled Hydrogen Gas Flame, the gasses separated from the water, the hydrogen and oxygen together with the ambient air non-combustible gasses, are mixed as they are released by the generator. The mixture of gasses are collected in a pressure chamber in the generator and thereafter expelled through a nozzle having a port configuration with openings dependant on the mixture of gasses. The nozzle is connected directly to the collection chamber and ignited.

The gas mixture has a reduced velocity and temperature of the burning flame from that which would occur solely with a hydrogen and oxygen mixture. To further control the flame, there is added to the mixture other non-combustible gasses in a controlled amount. Accordingly, the nozzle ports are related to the temperature and velocity of the flame. The several ports will accommodate flames of greater size without the danger of flashback or blowouts such as would happen with a single flame.

This physical force is further demonstrated in the plate separation phenomena of the first aforementioned co-pending patent application. Simply, the closer the spacing between the plate exciters the greater the attractive force of the opposite polarity plate exciters on the charged hydrogen and oxygen atoms of the water molecule. With a given spacing, an increase in the magnitude of the voltage applied to the plate exciters will result in an increase in the rate of production of the gasses. With a voltage of a fixed amplitude a variation in the plate exciter spacing will affect the rate of production of the gasses. An increase in the spacing will result in less generation, whereas a decrease in the spacing of the plate exciters will result in an increase in gasses.

THEORETICAL ANALYSIS

The electrical phenomena of a positive potential voltage applied to one plate exciter and the application of a negative voltage potential applied to another plate exciter positioned in a vessel of water, may now be considered.

Distilled water, like air, having no conductive medium, will inherently inhibit electron leakage. The magnitude of the applied voltage to the pair of plate exciters is correlated with the physical force on the electron movement. The magnitude of the initial force and the magnitude of the force to leak the electrons, and thereafter cause current flow, may be calculated or more readily empirically determined.

A small amplitude negative voltage applied to the negative plate exciter, will cause a physical disturbance to the movement of the floating electrons. However, the small amplitude voltage is insufficient to cause the electrons to leak and enter the attractive field force area of the positive plate. As the magnitude of the applied voltage is increased, the disturbance to the movement of the electrons is increased. With a further increase in the amplitude of the voltage applied to the plate exciters -- to a limiting level, the resistance of the medium to the attractive force of the opposite polarity exciter plate on the electron leakage will be overcome.

As the electron leakage enhances, the flow of the electrons to the positive plate exciter gradually increases as they enter the attractive field of the positive plate. Upon attaining a heavy flow of electrons reaching the positive plate attractive area, arcing will occur. An electrical arc is formed between the two plate exciters. When this occurs a direct short conductive flow of current will flow across the plates.

The electrical arc between the pair of plate exciters will form a direct line of conductivity; current will flow unrestricted. Upon the electron leakage attaining a direct short, the current is at a maximum. The voltage being subjected to the current takeover decreases gradually upon initial electron leakage and thereafter drops as the flow of electrons increases. When the electron leakage arcs over to the positive potential plate exciter, the voltage will drop to zero.

As stated above, the spacing between the pair of plate exciters in a vessel of water having a DC voltage applied, is correlated with the gas production rate. The closer the spacing between the pair of plate exciters, the greater the yield of gas generated. If the spacing of the pair of plate exciters is altered to a minimum spacing level, the attractive force of the positive polarity plate will overcome the resistance of the water medium. Electron leakage will occur and from gradually to rapidly increase until arcing between the pair of plate exciters forms a direct path and consequently a direct short.

The distance between the plates and the amplitude of the voltage applied, each independently affect the other. The two variable factors are interrelated; the one being variable relative to the other. The spacing being inversely proportional to the amplitude of the voltage.

SUMMARY OF THE INVENTION

In the utilization of a generator for the separation of the hydrogen and oxygen gasses from water; and the production of the gasses is varied by varying the amplitude of the voltage and/or the pulse rate--duty cycle of the pulsed DC voltage applied to the plate exciters in a vessel of water.

The present invention comprises a power supply with the applied voltage to the pair of plate exciters variable from zero upward to extremely high voltages; but yet, that inhibits the electron leakage.

The power supply of the present invention includes circuitry for an increased production of the generation of the gasses through varying the amplitude of the voltage applied to the plate exciters. The circuitry includes means and components for restriction of the electron leakage (current flow).

The applied voltage to the pair of plate exciters is a unipolar pulse DC voltage of a repetitive frequency. Alternate power circuitry is utilized. In the first embodiment the input voltage is alternating current fed to a bridge rectifier; whereas in the second preferred embodiment, the input voltage is direct current applied to the primary of a rotating field secondary winding.

With a very low level of amplitude of the voltage applied to the plate exciters, no electron leakage from the negative potential plate exciter to the positive potential attractive field will occur. An amplitude of the voltage above a first forceful level will cause electron leakage. The circuitry of the invention overcomes the electron leakage with the application to the plate exciters the aforesaid pulsed DC voltage.

An increase in amplitude of the applied voltage above a second level, will result in electron leakage.

To obtain additional gas production without electron leakage, circuitry in the power supply prevents electron leakage by varying the duty cycle of the pulsed DC voltage applied to the plate exciters. The varying levels of amplitude of the duty cycle pulses effectively restrains the electrons from the B+ attractive field.

The pulsating DC voltage and the duty cycle pulses have a maximum amplitude of the level that would cause electron leakage. Varying of the amplitude to an amplitude of maximum level to an amplitude below the maximum level of the pulses, provide an average amplitude below the maximum limit; but with the force of the maximum limit.

In most instances of a practical application of the hydrogen and oxygen generator the pair of plate exciters will be several pairs connected in parallel. There will be one terminal to the positive voltage and another terminal to the negative voltage. A further expediency to eliminate electron leakage is attained by eliminating the large surface area probability of stray electrons.

It is noted that the first two circuit components and the multiple connections for restricting electron leakage relates to the plate exciter having the negative voltage applied thereto. That is the circuitry overcomes the attractive force of the B+ potential field. Additional circuitry is provided for very high yield gas production above the aforesaid upper limits, in the negative applied voltage plate exciter.

A circuit is included in the negative plate exciter that practically eliminates electron flow; that is, the electrons are prevented from reaching the negative plate exciter and thereby eliminating the effect of the attractive force of the B+ field. A current limiting resister connected between the negative plate exciter and ground, prevents current flow--electron leakage to the opposite polarity field.

The circuit comprises a limiter resistor connected between the negative plate and ground that blocks current flow--electron leakage to the negative plate. The practical elimination of the current has no effect on the voltage, in the preferred embodiment, since there is no voltage drop. In a sophisticated embodiment, the limiting resistor comprises a unique structure of poorly conductive material having a resistive mixture sandwiched there between. A second resistor of the variable type is serially connected to the unique limiter for tuning. The value of the limiting resistance is determined by the current passing there through. The variable is employed until the ammeter reads zero or close to zero as possible.

The sandwich type limiter is varied in value by controlling the mixture of resistive material to binder.
The circuitry and expedients to inhibit the electron leakage at all levels of the magnitude of the voltage applied to the plate exciters is a sequence of steps and functions operable from predetermined circuit components. The order of the circuit functions is set and preferably not altered; however, each of the specific variables can be varied independently and varied with interrelated function to the other.

The phenomena that the spacing between two objects is related to the wavelength of a physical motion between the two objects is utilized herein. A relatively small increase in amplitude will yield an output several magnitudes greater when the motion of the water molecule is moving to and fro with a repetition rate to match the resonant length of the spacing between the pair of exciters.

OBJECTS OF THE INVENTION

It is a principle object of the present invention to provide:

a power supply for a hydrogen and oxygen gas generator wherein varying the voltage amplitude varies the rate of generation of the gasses generated.

such a power supply that includes circuitry to permit voltage to be varied in amplitude with current restrict to a minimum relative to the amplitude of the voltage.

such a power supply for a hydrogen and oxygen generator herein the electron leakage between the plate exciters is inhibited.

a power supply for a hydrogen and oxygen generator including circuitry for a unipolar pulse DC voltage of a repetitive frequency from either an alternating or a direct current input.

a power supply having varying levels of voltage indicative of varing levels of gas generation that is programmable with a utilitarian device, particularly, when the generator has exciters spaced a distance in wavelength matched by the voltage pulse frequency.

BRIEF DESCRIPTION OF DRAWINGS

FIG. 1 is an overall illustration of the present invention in a preferred embodiment; the components shown partly in block schematic and partly pictorially.

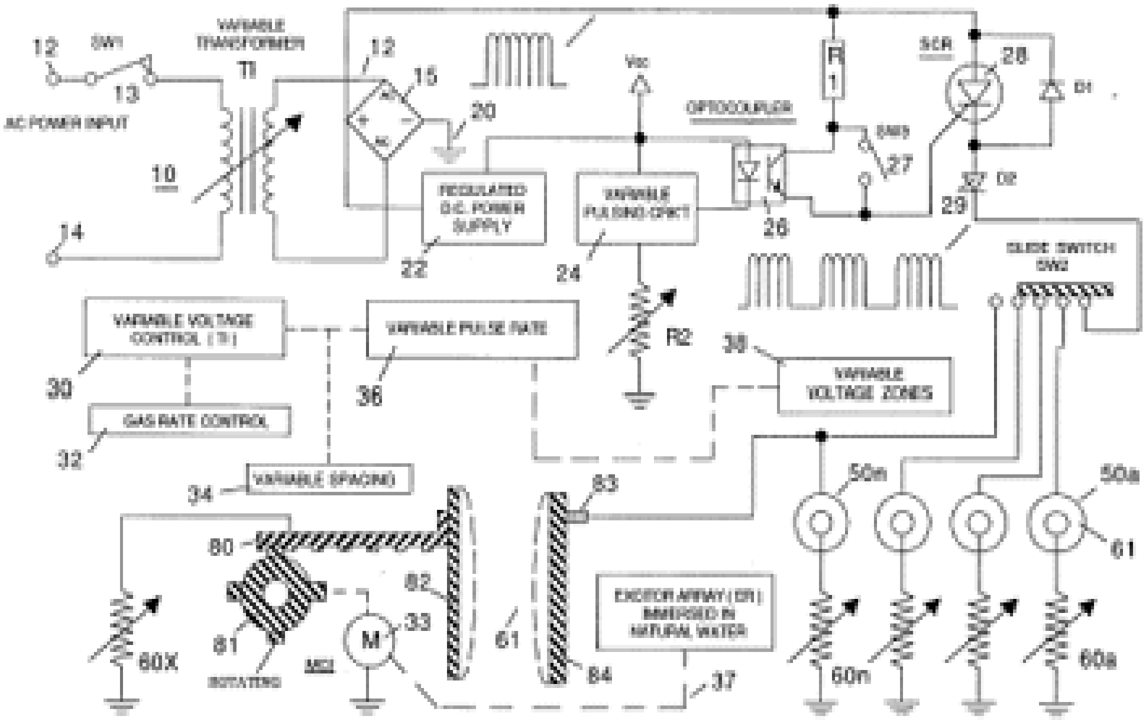

FIGURE 1

FIG. 2 is a first waveform illustrating the unipolar pulse d.c voltage of repetitive frequency with a uniform duty cycle.

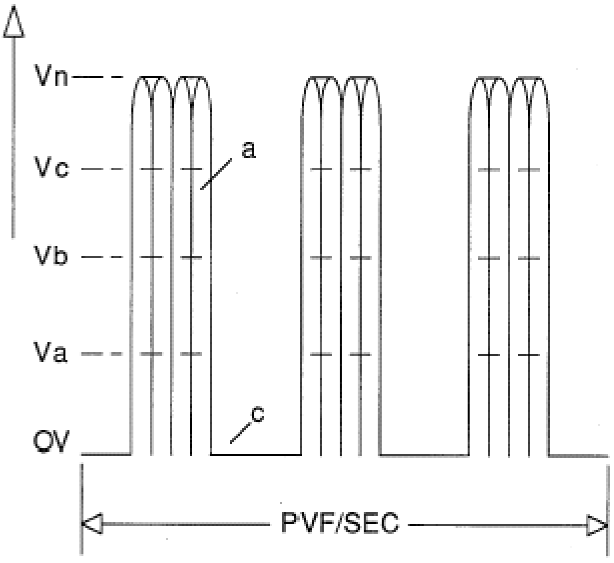

a) HIGH GAS-YIELD
c) OFF STATE

FIG. 3 illustrates the unipolar pulse voltage with a continuous repetitive frequency.

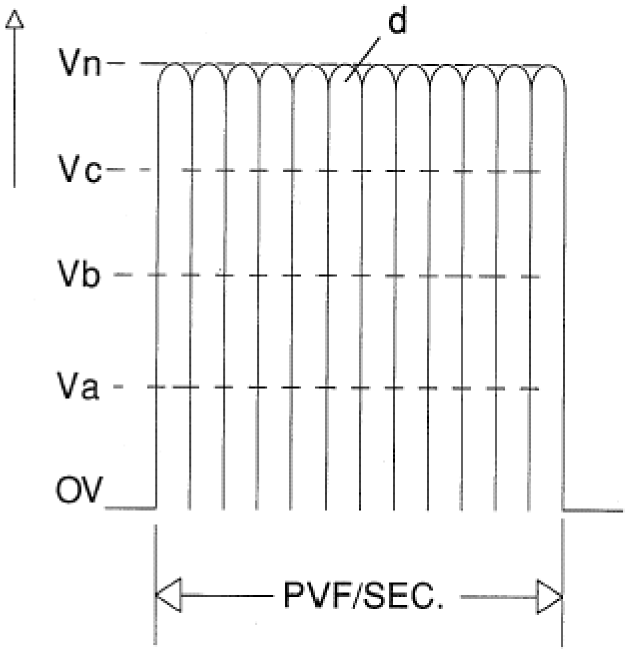

d) MAXIMUM GAS-YIELD

FIG. 4 illustrates the unipolar pulse voltage of a repetitive frequency having a uniform duty cycle from a low gradient level to high gradient level; FIG. 4A illustrates the duty cycle as being non-uniform and between gradient levels; FIG. B illustrates the duty cycle comprising varying gradient levels and of non-uniform repetition; and FIG. 4C illustrates the varying gradient levels as being uniform.

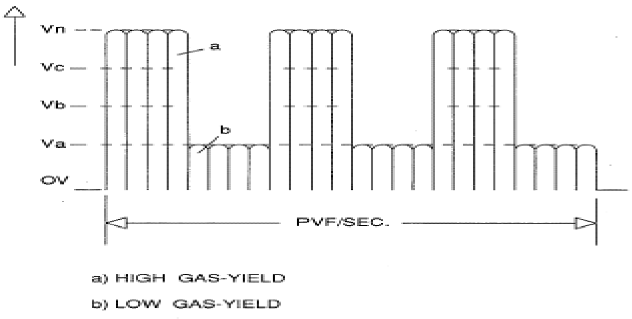

FIGURE 4

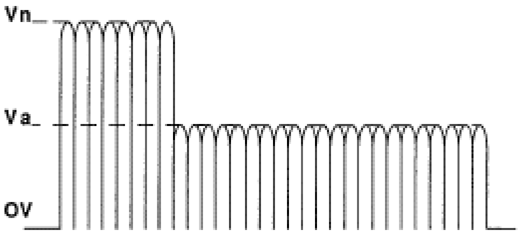

FIGURE 4A

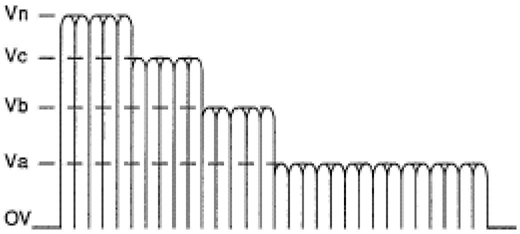

FIGURE 4B

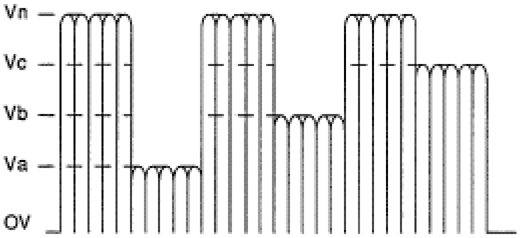

FIGURE 4C

FIG. 5 illustrates partly schematic and partly in block the pulse frequency generator from a direct current voltage source.

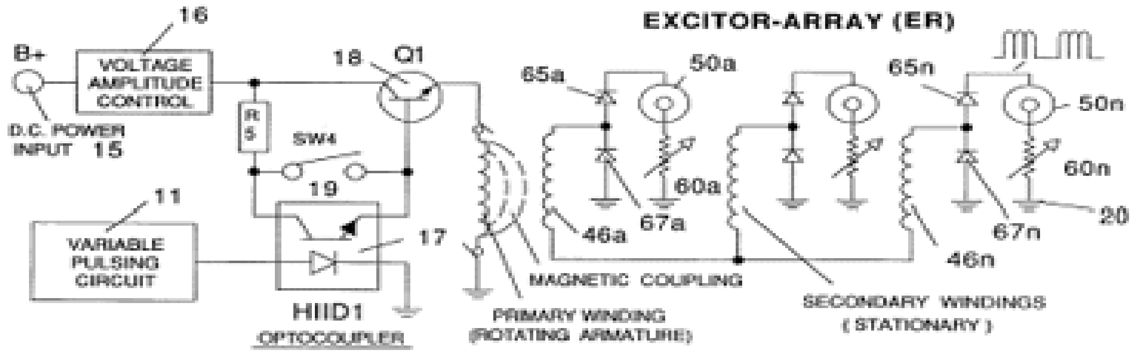

PULSE VOLTAGE FREQUENCY GENERATOR

FIGURE 5

FIG. 6 is a schematic of the circuitry for programming the varying levels of voltage to practical applications.

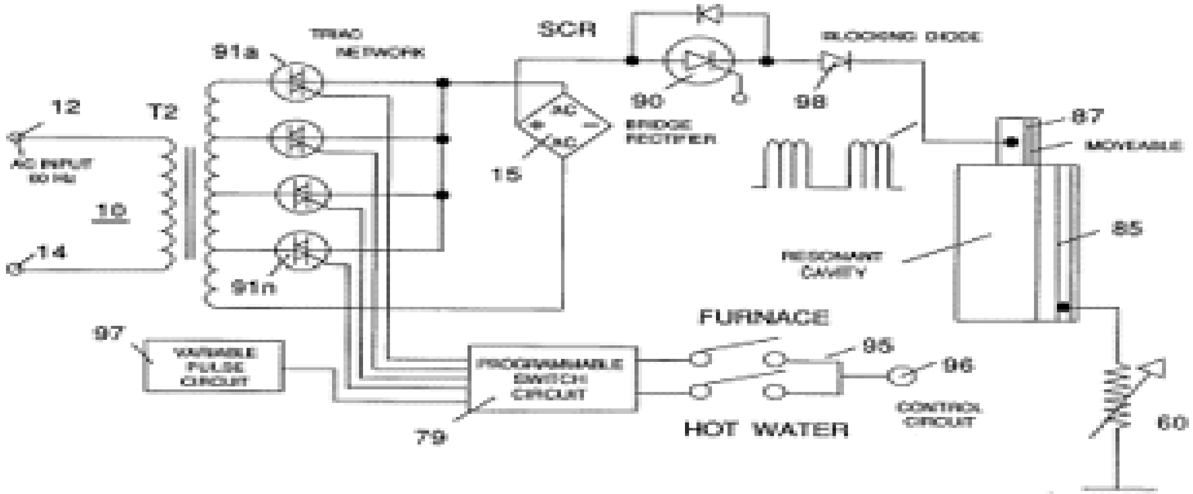

FIGURE 6

FIG. 7 is a crossectional perspective of a multiple layer sandwich resistive element for inhibiting electron leakage.

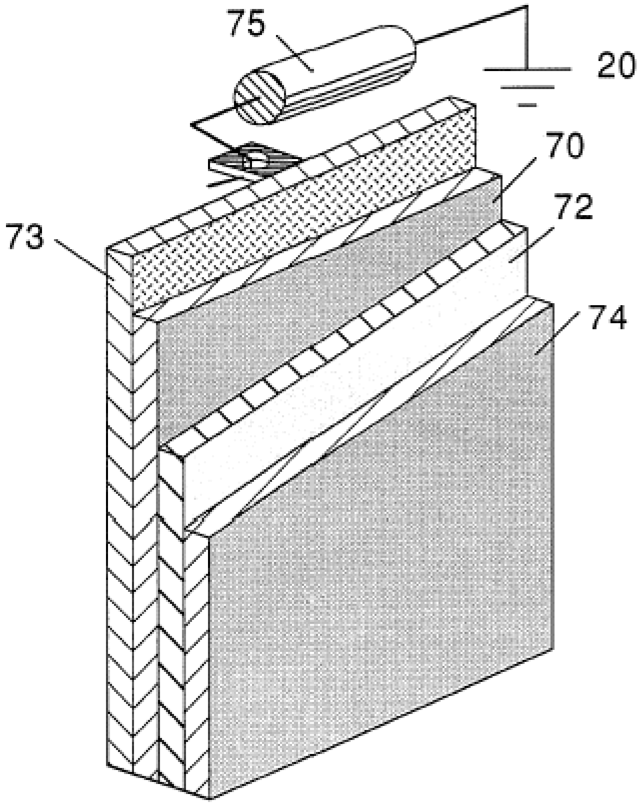

FIGURE 7

FIG. 8 is a graphical illustration of the varying limitations of voltage amplitude for inhibiting electron leakage.

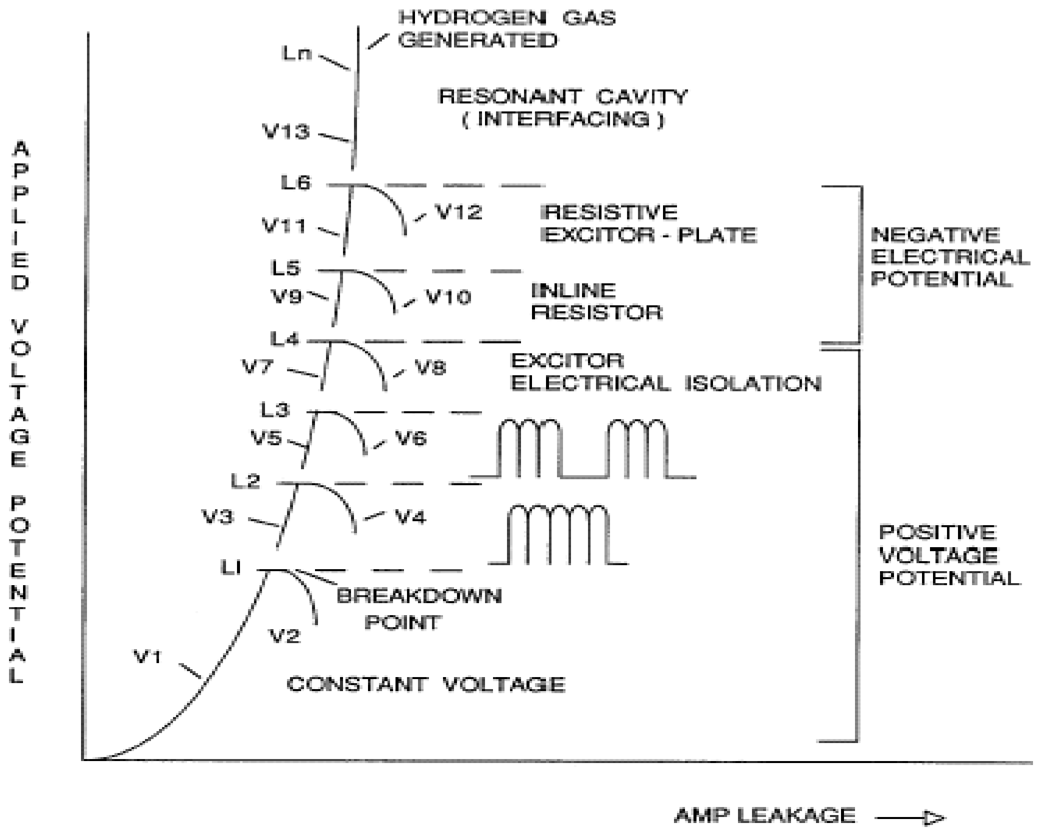

FIGURE 8

DETAILED DESCRIPTION

Referring to the drawings and in particular to FIG. 1, there is illustrated the present invention in its preferred embodiment of a power supply for the aforementioned hydrogen and oxygen gas generator, providing variable amplitude voltage with inhibited electron leakage.

The alternating current rectifier circuit 10 comprises input alternating current terminals 12 and 14. Switch 13 is a typical on/off switch. Transformer 10 is an inductive primary and secondary transformer connected to a bridge rectifier 15. The inductive field 11 of the transformer 10 is variable in a known manner to yield a variable frequency alternating voltage/current to the primary winding. The bridge 15 arms are connected across the input of the secondary winding of the transformer 10. The upper and lower arms are connected across the extreme ends of the secondary winding and the left-hand arm is connected to the output of the rectifier 15. The right arm is connected to ground 20. The rectifier inverts the negative swing of the alternating current and thereby results in an output voltage pulse of a frequency twice that of the input frequency of the alternating current voltage applied to the terminals 12 and 14.

It is appreciated that if the alternating current voltage is varied in frequency by the variable inductive field 11, the output frequency across the bridge 15 will still be twice the frequency of the alternating voltage across the secondary of the transformer secondary winding 10.

The power supply of FIG. 1 includes a variable circuit 30 for varying the amplitude of the rectified voltage by rectifier 15. The variable voltage circuit, in turn, is directly controlled by the gas rate function separately, sequential, and together with the phenomena of a resonant cavity.

The waveform output of the bridge is shown as a unipolar DC voltage pulse of a repetitive frequency. It is noted that the pulse voltage is not filtered, and the plate effect is utilized.

As stated, a voltage with an amplitude below the minimum level for example, with a given size apparatus, 2.5 volts (L-1 of FIG. 8) when applied to the pair of plate exciters, is insufficient amplitude to force the electrons to leak from the negative plate exciter.

The hydrogen and oxygen gasses will be separated from the water at the low level of voltage amplitude; and the gasses generated will also be at the minimum.

Above the minimum level (L-1 of FIG. 8) of amplitude, the applied voltage will have a sufficient force to agitate and cause movement of the electrons around the negative plate exciter. As a consequence, electron leakage would take place.

To overcome the forceful effect on the electrons around the negative plate exciter but apply a voltage of increased amplitude for an increase in gas production, the first step in a sequence is utilized. The pulsed DC voltage having a frequency predetermined by the input alternating current to the transformer 10, is applied to the plate exciter.

The maximum amplitude of the DC voltage pulse is sufficient to cause an increase in gas production; however, the minimum amplitude of the pulsed DC voltage is insufficient to cause electron leakage. The average of the maximum and the minimum results in an increase gas output but without electron leakage.

The physical force on the movement of the electrons around the negative plate exciter is further controlled in specific situations by varying the frequency of the pulsed DC voltage. The frequency of the pulsed DC voltage may be altered by an alternating current of another frequency applied to the input terminals 12 and 14. Alternatively, the frequency of the pulsed DC voltage may be varied as shown by the variable transformer 10 winding 11.

With reference to FIG. 3, the unipolar pulsed DC voltage of a constant frequency is illustrated. In the first mentioned variation of the amplitude of the pulsed voltage, there is further shown in FIG. 3 voltage levels from OV, Va xxx Vn. As noted below a variation of amplitude above the predetermined levels will permit electron leakage.

Referring to FIG. 8, there is illustrated an appreciation of the significance of electron leakage. Initially it is to be noted that the first amplitude level, L-1, is when electron leakage occurs. Prior to leakage, voltage V.sub.1 increases on demand. At the level L-1, when leakage occurs, current begins to flow and as a consequence the voltage V.sub.2 begins to drop. The current flow increase is proportional to the voltage decrease; and upon arcing, a dead short condition for current takeover, the voltage V.sub.2 drops to zero.

The same rise and fall in amplitude of the voltage versus current flow repeats at amplitude levels L-2. L-3, L-4, and L-5; again, in a given size apparatus, voltages of 4, 5.5, 7, and 8.5.
It is seen then, that it is paramount that electron leakage must be curtailed when the operation of the system is dependent on voltage, such as the generator utilized herein.

Returning to the overall circuit of FIG. 1, the unipolar pulsating DC voltage is an improvement in raising the amplitude of the voltage without electron leakage. Unfortunately, it too, has a voltage amplitude limit of 4.0 volts as shown by L-2 of FIG. 8.

To further restrict current flow with amplitude voltages above the level L-2 of FIG. 8, electron leakage is inhibited from the exciter plate having the negative voltage applied thereto, by varying the duty cycle pulse of the pulsed DC voltages as shown FIGS. 2, 3, and 8. In an initial application the pulsed DC voltage is switched on and off for equal periods of time.

With reference again to FIG. 1, the variable pulsing circuit comprises an electronic switch SCR 28 operable from one state to another form the opt coupler timing circuit 26. The operation and of the pulsing of a voltage is within the state of the art.

Diode 29, a blocking diode, is operable in the accepted manner to eliminate stray electrons, shorts, variances, spurious signals, and the like. In addition, the diode 29 blocks the back-electromagnetic force.

The pulsing of the pulsed DC voltage, as shown by the waveform of FIG. 2, comprises switching, via trigger circuit 26, the pulsed DC voltage on an off--in a first instance. As will be understood below relative to the programming circuit of FIG. 6, the time period of the pulses may be varied periodically or a periodically, the duration of the on/off period may be varied, the gradient level of the on/off pulses may be varied, and all of the above may be interrelated into a sequence of duty pulses with the varying conditions all as shown in FIGS. 4, 4A, 4B, and 4C.

The duty pulses are effective much in the same manner as the pulsed DC voltage pulses in the function of inhibiting electron leakage. The "second" series of force on the electrons around the plate exciter, having the negative potential voltage applied, in terms of voltage amplitude is greater. However, the greater amplitude is averaged by the double pulses to an effective voltage of an amplitude to inhibit electron leakage.

As previously stated, the voltage pulses applied to the plate exciters further enhance the rate of generation of the gasses. Accordingly, to achieve the most effective relationship between gas generation and current limiting, the voltage amplitude is interrelated to the pulse repetition rate of the duty pulses in FIG. 1. Also, the rate of production is related to the frequency of the unipolar DC voltage, the frequency then should be interrelated to the duty cycle pulses.

With continued reference to FIG. 1, mechanical switch 40 is a known means for applying the voltages to the plate exciters individually and sequentially. The negative plate exciter is the center conductor of an inner and outer arrangement. The negative plate exciter is connected to ground 20; ground 20 being the power supply ground.

The dual pulses comprised of the frequency repetitive pulses and the duty cycle pulses similarly to the previous configuration. The amplitude is effective to increase the output gas generation with an upper limit of 5.5 volts, in this instance L-3 of FIG. 8.

In a typical configuration of the hydrogen generator of the aforementioned co-pending application, the plate exciters will comprise a plurality of pairs. In the previous configurations the positive voltage was applied in parallel to all the inner plates; whereas the negative voltage was applied to all of the inner plate exciters in parallel. It has been found that an increased surface between the inner and the outer plates will increase the probability of an electron breaking free and leaking to the attractive field of the positive voltage plate. The surface leakage has been eliminated by applying separately and individually the positive voltage to each of the outer plate exciters and the negative voltage to each of the inner plate exciters.

With reference to FIG. 8 again, it is seen that although the serially connected exciter plates do permit a higher amplitude of voltage to be applied, it too, has a limitation L-4 of 7 volts.

The next expediency in the sequence for inhibiting electron leakage is the current inhibitor resister 60 as shown in FIGS. 1 and 5. The circuit 60 comprises a simple resistor of the commercial type or specially made for the particular application. The resistor is variable to provide fine tuning of the electron inhibiting. In that each pair of plate exciters are connected separately, a resistor 60a xxx 60n is connected to each of the plates having the negative voltage connected thereto. In this embodiment the inner plate of the exciters 50a xxx 50n. In that the inner plate had been normally connected to ground, the resistive element is now connected between the inner plate and ground.

As known in electrical art the resistor will provide a complete block to electron leakage--current flow. However, since the resistor 60 is connected from ground-to-ground there is no real effect on the voltage; and since there is no connection with the positive side there is no voltage drop.

The electron leakage resistor will again raise the upper limit of 8.5 volts amplitude before breakdown as shown at L-5 of FIG. 8. In the generation of the hydrogen and oxygen gasses to an infinite limit, as yet not fully appreciated, the upper level of amplitude of the voltage is removed with the utilization of the electron inhibitor of FIG. 7.

In this embodiment of the current inhibitor connected to the inner plate having the negative voltage applied thereto, comprises a stainless-steel sandwich 70/74 with a resistive material there between. The stainless steel is a poor conductive material and hence will restrict to some extent the electron flow. Other poor conductive material may be utilized in lieu of the stainless steel. The electron inhibitor 70/74 is connected in the same manner as resistor 60--between the inner plate having the negative potential connected to it and ground.

The resistive value of the electron inhibitor 70/74 is chosen empirically to a closest value, thereafter the total value of the resistance is fine-tuned by the resistor 75 connected serially between the inner plate and ground.
To alter the resistive value of the electron inhibitor 70/74, the resistive material 72 comprising a mixture with a binder is altered in the percentage of resistive material to binder.

With reference to FIGS. 1 and 8, the pulse DC voltage of a repetitive frequency and the duty cycle pulses, together with the serially connected plate exciter techniques in the sequence for limiting the electron leakage is in relation to the positive exciter outer plate. The current inhibitor resistor 60 and the current inhibitor resistor 70/74 are in the negative voltage line connected to the inner plate.

With particular reference now to FIG. 5, there is illustrated an alternative embodiment for derivint the unipolar DC voltage pulse of a repetitive frequency -- similar to that of FIG. 1. The distinction in the embodiment of FIG. 5 is that the input voltage is a direct current in contrast to the alternating current of FIG. 1.

In operation of the circuit of FIG. 5, a low voltage, such as from a battery, is applied to the primary winding to the circuit of a rotating field. The primary winding 42 being the rotating field has it opposite end connected to ground. As the field of the primary winding 42 rotates, there is induced three pulses at the output of each of the three secondary windings 46a 46b, and 46c.

The repetition of the triple pulse is once per each revolution; hence the number of pulses per given period of time is related to the speed of rotation of the rotating field. A faster rotation will produce a greater voltage frequency. An increase in the number of secondary windings will result in an appropriate increase in the number of pulses; whereas an increase in the number of turns on the secondary windings will increase the amplitude of the pulses. The alternating voltage output of the three secondary windings is converted into pulses by the conventional diode rectifiers 65/67 bridge circuit for each of the separate pairs of exciter plates 50a-50n. In this way a constant unipolar pulsating DC voltage of a repetitive frequency similar to that of FIG. 3 is applied to each of the exciter plates 50a xxx 50n. The output is similar to that derived from the alternating voltage input of FIG. 1. The DC voltage is a constant voltage pulse.

Again, similar to FIG. 1, there is provided a timed pulsing circuit comprised of a timer 17, switch 19, and transistor 18. Initially, the DC pulse voltage is switched on and off, to provide a constant share time duty cycle to the primary winding 42 of the rotating field. In the off period there will be no voltage on the primary winding 42, and hence, no voltage output on the secondary winding 46.

The circuit of FIG. 5 is especially economical in that extremely low amplitude voltages (0-5 volts) is applied to the primary 42. At this low level, the current is negligible and power consumption is minimum. The output voltages from the secondary windings 46 is relatively high and is in the order of two hundred volts. The output voltages from the secondary windings 46 are variable in amplitude by the resistor 16 in the input circuit. A very small increment of input voltage results in a much greater output.

The sequence of circuitry of the pulsed DC voltage, duty cycle pulses, serially connected exciters, resistor in the ground line, and the plate resistor are each, and together, effective to eliminate electron leakage. The conditions set forth, in each instance were under actual conditions--with distilled water.

In the basic process of water separation as herein utilized, the hydrogen and oxygen gasses are separated by the application of a voltage to the plate exciters with the attendant current as close to zero as possible. Accordingly, the use of natural water having contaminants is equally operable; the containments will have no effect upon the separation of the hydrogen and oxygen atoms from the water molecule; nor will the contaminants have an effect on the plate exciters such as fouling up.

With the use of certain natural waters particularly sea water with a salt content or natural water with an iron or other mineral content, the natural water would tend to draw current. The passing of current as set forth above, would cause the voltage to drop and basically would curtail the operation of the generator.

The resistor 60 of FIGS. 1 and 5, connected between the exciter plate having the negative voltage applied thereto and ground is an effective current limiter/electron inhibiter. In simple terms the restriction to current flow to the negative plate is a restriction to the flow of current between the pair of plate exciters. There can be no electron leakage from the negative potential plate exciter if there are no electrons to leak.

The resistor 60 of FIGS. 1 and 5, and especially when taken together with the resistive plate structure of FIG. 7, current is eliminated from the plate exciters.

In FIG. 1 there is illustrated an alternative manner of varying the rate of separation of the hydrogen and oxygen gasses from water. As fully disclosed and described in the aforesaid co pending application Ser. No. 302,807, the spacing between the plate exciters in water is directly related to the rate of separation of the hydrogen and oxygen gasses.

The plate exciters 82 and 83 positioned in water 61 are varied in spacing by the rack 80 and gear 81. The variations can be manually or through the programmer 69 for predetermined gas rate generation. The programmer actuates line 37 to the motor 33 to drive the gear 81.

The closer the spacing the greater the gas yield, i.e., the attractive force of the electrical voltage zones is related to spacing. However as noted above, the closer the spacing the greater the probability of spurious electron leakage. It is appreciated the optimum is the closest spacing for gas generation with a minimum of current leakage.

The pulsed DC voltage, the duty cycle pulses, the resistor from negative to ground, the serial connections of the exciters, and the plate resistor in series with a variable resistor between the negative plate and ground, is a sequence of circuits that counteract the electron leakage with increased voltage. Similarly, the same sequence individually and in combination are equally applicable with respect to the variation of plate spacing to vary the rate of generation of the gasses but yet, to restrict electron leakage. The voltage levels from 0 volts upward will be dependant on the physical parameters of the apparatus. In one typical structure of the apparatus the voltage was varied from zero (0) volts to 45 volts. In a smaller structure, the voltage levels of FIG. 8 were utilized.

With reference again to FIGS. 2, 3, 4, 4A, 4B, 4C, and 4D, the waveforms illustrated therein depict the several variations of the pulsed DC voltage relative to the duty cycle pulses. Initially, each of the two set of pulses are varied individually. The on/off time of the two sets of pulses in a first instance is uniform. Then the timing of one or the other is varied; the gradient levels of the voltages are varied periodically and a periodically, pulse duration is varied equally and unequally.

To attain the optimum gas generation with minimum electron leakage, is determined empirically with a gas flow meter and an ammeter. The variables are interrelated but not necessarily having the effect on either gas production or electron leakage. Practical training reduces the tune-up period.

In FIG. 6, there is illustrated the resonate cavity of my aforesaid co-pending patent application Ser. No. 422,594. The resonant cavity described and disclosed therein, is a result of the discovery that when the distance between two stationary bodies is equal in wavelength to the frequency of the movement of an object going back and forth there between, the movement of the object will go into resonance. The motion is greatly enhanced and with a repetitive sustained force. The principle applied to the hydrogen and oxygen gas generator of the present invention results in the movement of the water molecules and the atoms to an attractive field will be greatly enhanced when the frequency of the back and forth movement is matched to the wavelength of the distance between the pair of plate exciters.

The amplitude is increased to the minimum for resonance. The voltage amplitude thereafter is maintained at the minimum and raised from the minimum for an increase in gas generation. The minimum is the lower gradient level illustrated in the waveforms of the figures. Since resonance is a matter of matching a physical distance with frequency of the back and forth motion over that distance, matching the particular frequency to the particular wavelength, can be with either DC voltage pulses or the duty cycle pulses.

The resonant cavity is depicted in FIG. 4 pictorially. It is understood that the exciter plates 50a-50n of FIG. 1 become resonant cavities by matching the distance between the exciters to a pulse frequency of the same wavelength.

In FIG. 4 and 4C, the duty cycle pulses are matched in pulse repetition rate to the plate distance. In FIG. 4A and 4B, the frequency of the pulsed DC voltage is matched to the distance in wavelengths of the plate exciters. With the frequency of one of the set of pulses matched to the resonant wavelength, the frequency of the other set of pulses is varied to further control the electron leakage and/or to vary the rate of generation of the gasses.

Referring again to FIG. 6, attention is directed to the resonant cavity depicted therein pictorially. The resonant cavity would be the plate exciter of FIG. 1 or any other plate exciter wherein the frequency of the pulses of the applied voltage is matched in wavelength to the distance between the exciter plates.

The SCR diode is a duty cycle pulse former much in the same manner as the pulse former 27 of FIG. 1. The SCR diode 90 is operational in a conventional manner and the diode 91 is a conventional blocking diode. The operation and function of the resonant cavity is much in the same manner as that of FIG. 1 plate exciters 50a-50n.

In a Hydrogen Resonant Cavity Furnace, the pulse repetition rate is matched to the wavelength distance between the two exciter plates to maximize the rate of generation to voltage amplitude.

The flame is pulsed form a first gradient level to a lower gradient level--but not off. The lower gradient level is sufficient to maintain at all times the amplitude to sustain resonance.
The waveform is shown in FIG. 4. The lower level amplitude Va is not OV the zero level; the amplitude level Va is sufficient to maintain resonance with a matched repetition rate of the duty cycle pulses.

In FIG. 6, the programmable switch circuit 79 is for variable inputs to a utilitarian device, such as the aforesaid furnace or the automobile hydrogen engine disclosed and claimed in my co-pending patent application Ser. No. 478,207. In the practical working embodiments, the demand may be for hot water, heat, singly or together; and in the automobile the rate of acceleration; or simply the control of the flame size.

The increments of heat, acceleration, or flame size are controlled by the triacs 91, 92, 93, and 94, connected across the secondary winding and to taps on the secondary winding of the input transformer.

Synchronized with the voltage level control of the switching of the duty cycle pulse, is variable pulse circuit 97. The switch 95 provides the demand control to be programmed, that is, the voltage amplitude and the duty cycle pulses. The SCR switching circuit 90 converts the DC voltage pulse output of the rectifier 15 to duty pulses. The duty cycle pulse being variable in pulse repetition rate to match the distance in wavelength of the spacing of the plate exciters 86 and 87. Diode 98 is a blocking diode.
Although certain and specific embodiments have been shown the invention is not to be limited thereto. Significantly, the relatively small increase in voltage for a very appreciable gas generation upon resonance has extended applications to other uses of the hydrogen and oxygen gas generator. The control of the electron leakage is especially applicable to systems and processes wherein the potential is voltage dependant with no or little current.

4.0.1.2. Controlled Process for the Production of Thermal Energy from

Gases and Apparatus; US #: 4,826,581; (May 2, 1989);

Abstract:

A method of and apparatus for obtaining the release of energy from a gas mixture including hydrogen and oxygen in which charged ions are stimulated to an activated state, and then passed through a resonant cavity, where successively increasing energy levels are achieved, and finally passed to an outlet orifice to produce thermal explosive energy.

Inventors: Meyer; Stanley A. (3792 Broadway, Grove City, OH 43123) Appl. No.: 081859 ~ Filed: August 5, 1987 Current U.S. Class: 204/157.41; 204/164 ~ Intern'l Class: C07G 013/00 Field of Search: 204/164,157.41,157.44

FIELD OF THE INVENTION

This invention relates to a method of and apparatus for obtaining the release of energy from a gas mixture including hydrogen and oxygen in which charged ions are stimulated to an actived state, and then passed through a resonant cavity, where successively increasing energy levels are achieved, and finally passed to an outlet orifice to produce thermal explosive energy.

BACKGROUND OF THE PRIOR ART

Processes have been proposed for many years in which controlled energy producing reactions of atomic particles are expected to occur under "cold" conditions. [See. e.q. Rafelski, J. and Jones, S.E., "Cold Nuclear Fusion," Scientific American, July 1987, page 84]. The process and apparatus described herein are considered variations to and improvements in processes by which energy is derived from excited atomic components in a controllable manner.

OBJECTS OF THE INVENTION

It is an object of the invention to realize significant energy-yield from water atoms. Molecules of water are broken down into hydrogen and oxygen gases. Electrically charged gas ions of opposite electrical polarity are activated By Express Mail No. 26224690 on August 5, 1987 by electromagnetic wave energy and exposed to a high temperature thermal zone. Significant amounts of thermal energy with explosive force beyond the gas burning stage are released.

An explosive thermal energy under a controlled state is produced. The process and apparatus provide a heat energy source useful for power generation, aircraft, rocket engines, or space stations.

BRIEF DESCRIPTION OF THE DRAWINGS

FIG. 1 illustrates a staged arrangement of apparatus useful in the process, beginning with a water inlet and culminating in the production of thermal explosive energy.

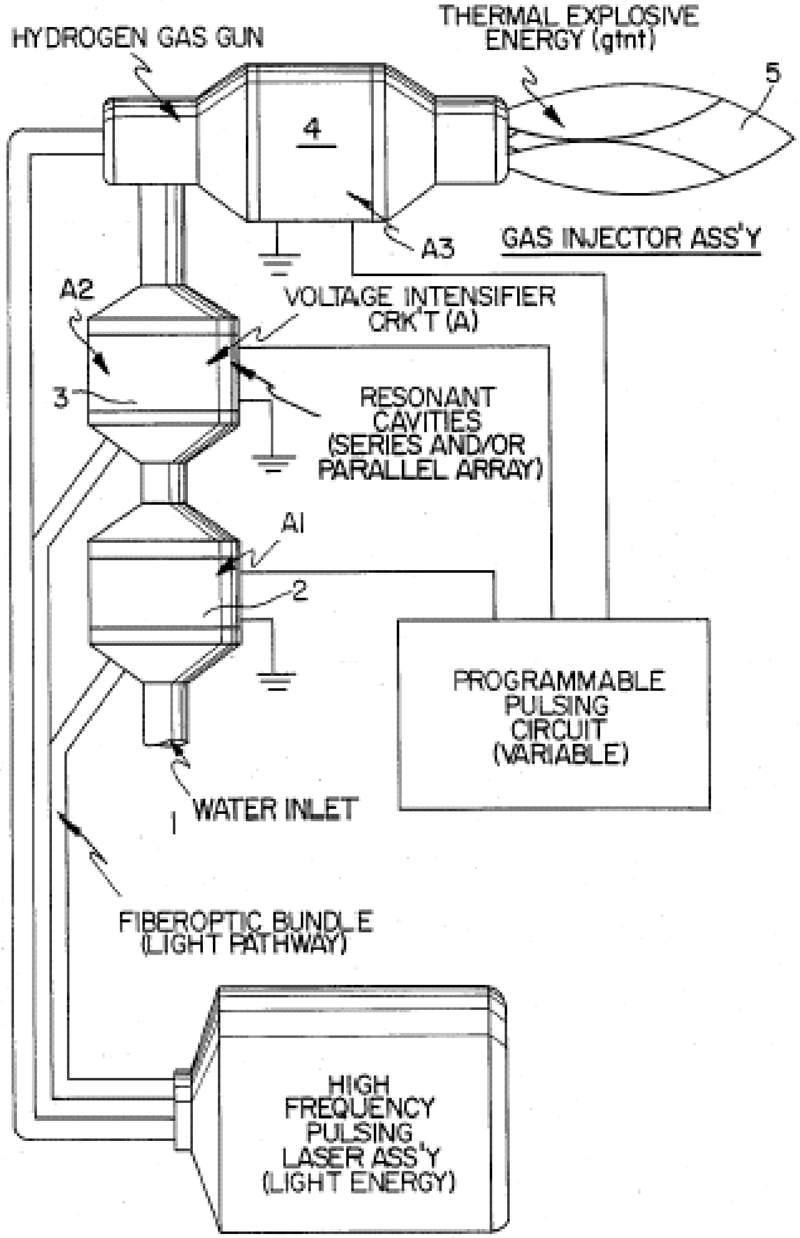

FIG. 2A shows a cross-section of a circular gas resonant cavity used in the final stage assembly of FIG. 1.

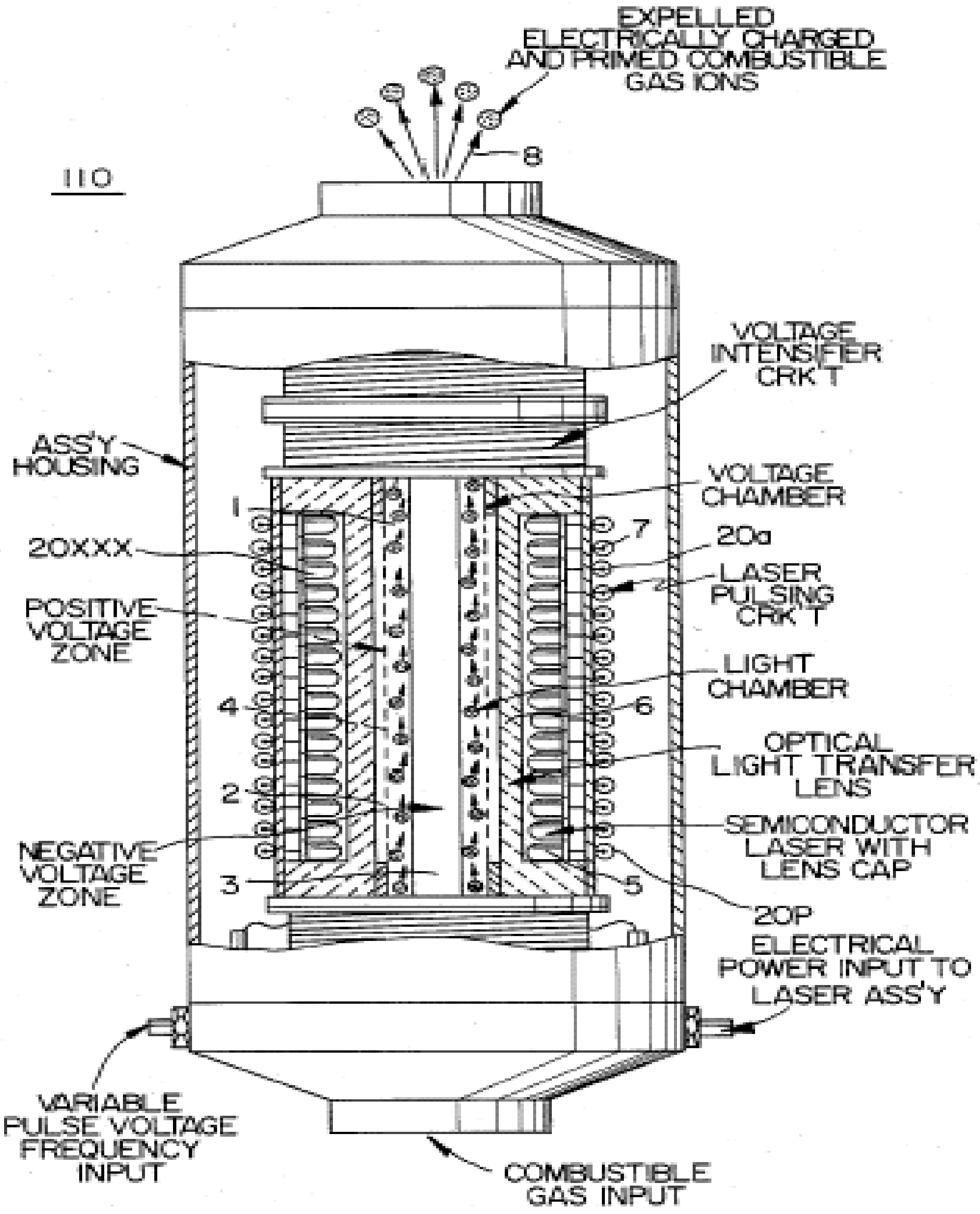

FIG. 2B shows an alternative final stage injection system useful in the apparatus of FIG. 1.

[Error in patent: Figure not shown]
FIG. 2C shows an optical thermal lens assembly for use either final stage of FIG. 2A or FIG. 2B.
[Error in patent: Figure not shown]

FIGS. 3A, 3B, 3C and 3D are illustrations depicting various theoretical bases for atomic phenomena expected to occur during operation of the invention herein.
[Error in patent: Figure not shown]

FIG. 4 is an electrical schematic of the voltage source for the gas resonant cavity.
[Error in patent: Figure not shown]

FIGS. 5A and 5B, respectively, show (A) an electron extractor grid used in the injector assemblies of FIG. 2A and FIG. 2B, and (B) the electronic control circuit for the extractor grid.
[Error in patent: Figure not shown]

[Actual Figures:]

Figure 3

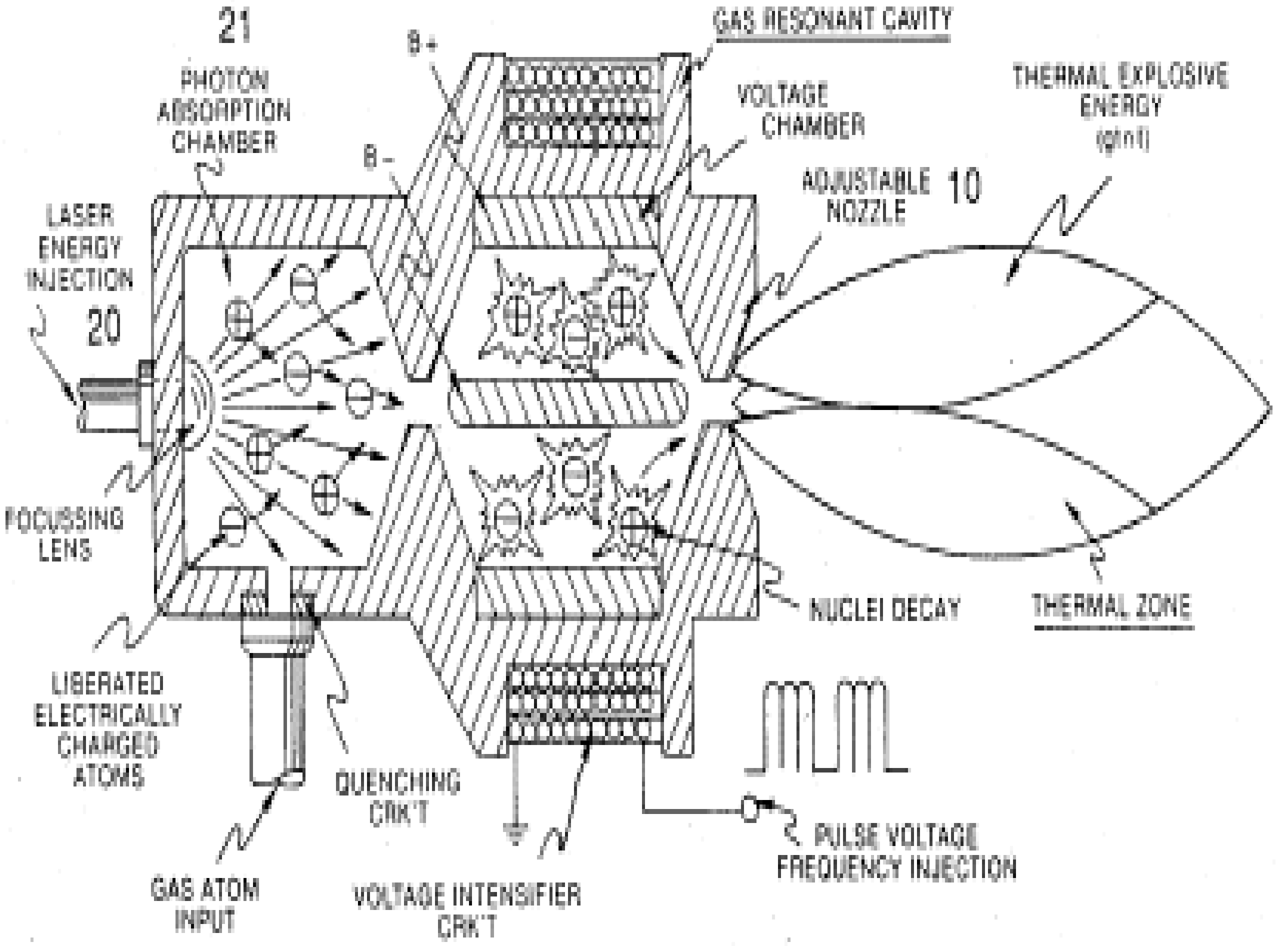

Figure 4

FIG.4

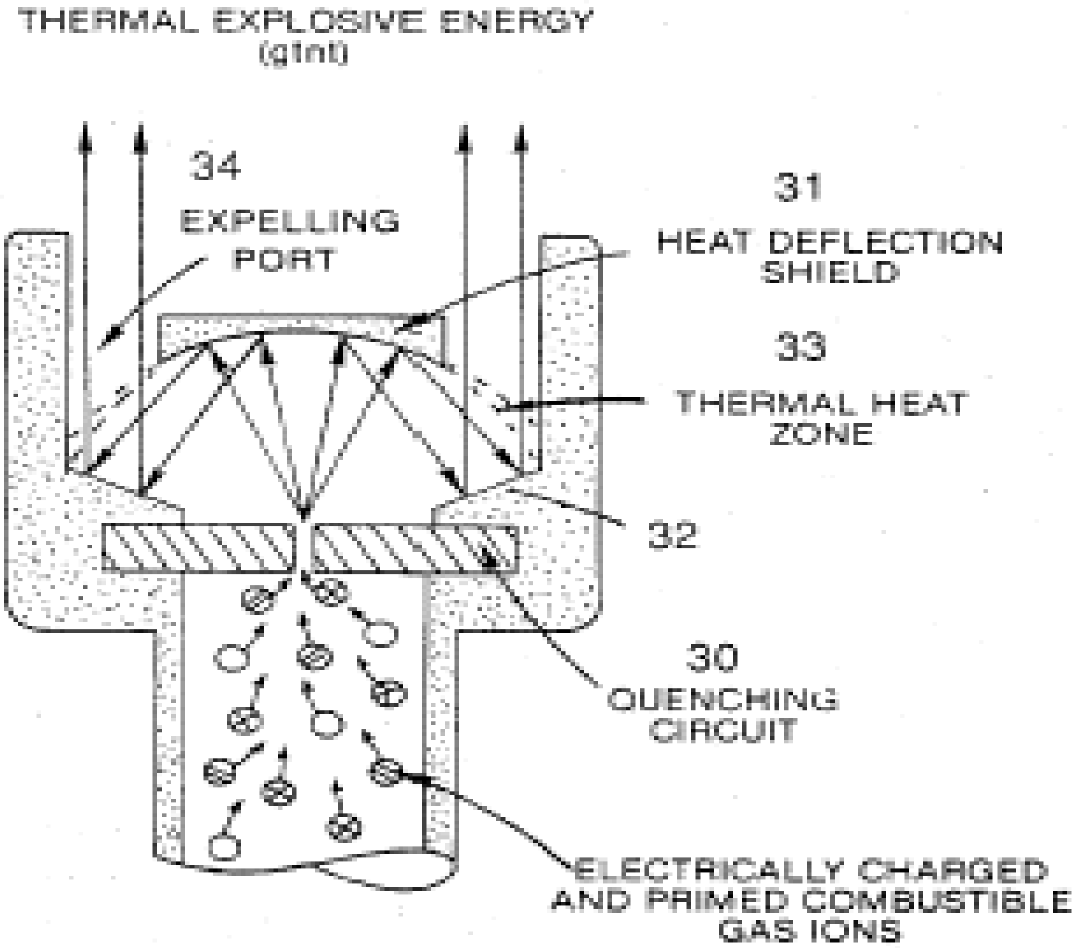

Figure 5

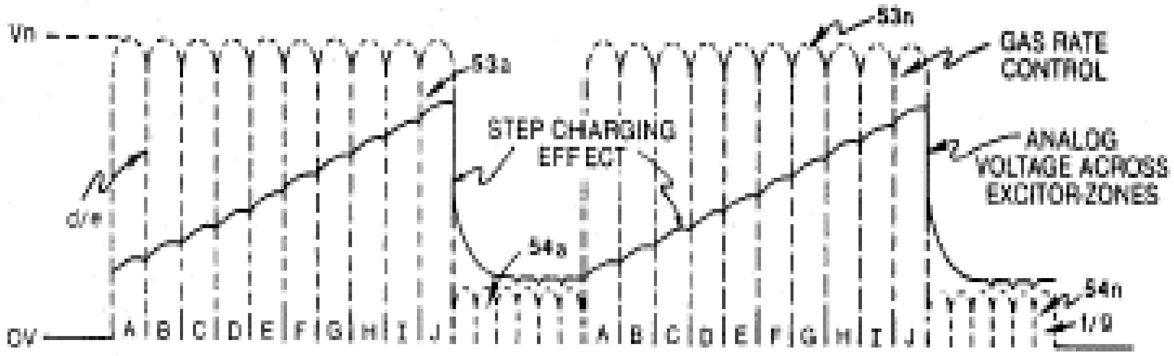

SECTION AA: APPLIED VOLTAGE PULSE TRAIN

SECTION BB: APPLIED LASER OR PHOTON PULSE TRAIN

Figure 6

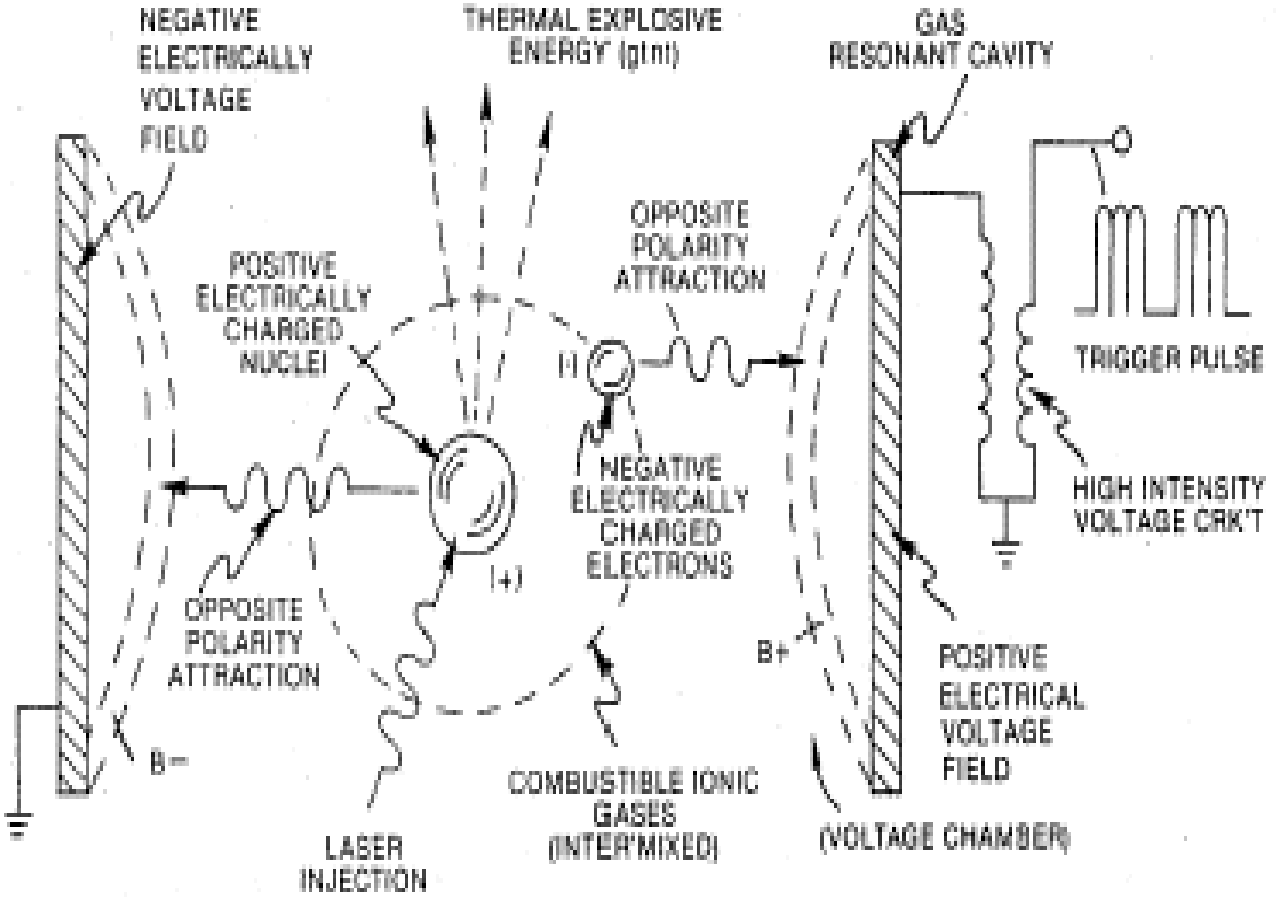
NEGATIVE ELECTRICALLY VOLTAGE FIELD
THERMAL EXPLOSIVE ENERGY (gtnt)
GAS RESONANT CAVITY
OPPOSITE POLARITY ATTRACTION
POSITIVE ELECTRICALLY CHARGED NUCLEI
(-)
TRIGGER PULSE
NEGATIVE ELECTRICALLY CHARGED ELECTRONS
HIGH INTENSITY VOLTAGE CRK'T
(+)
OPPOSITE POLARITY ATTRACTION
B+
POSITIVE ELECTRICAL VOLTAGE FIELD
B−
COMBUSTIBLE IONIC GASES (INTER'MIXED)
(VOLTAGE CHAMBER)
LASER INJECTION

Figure 7

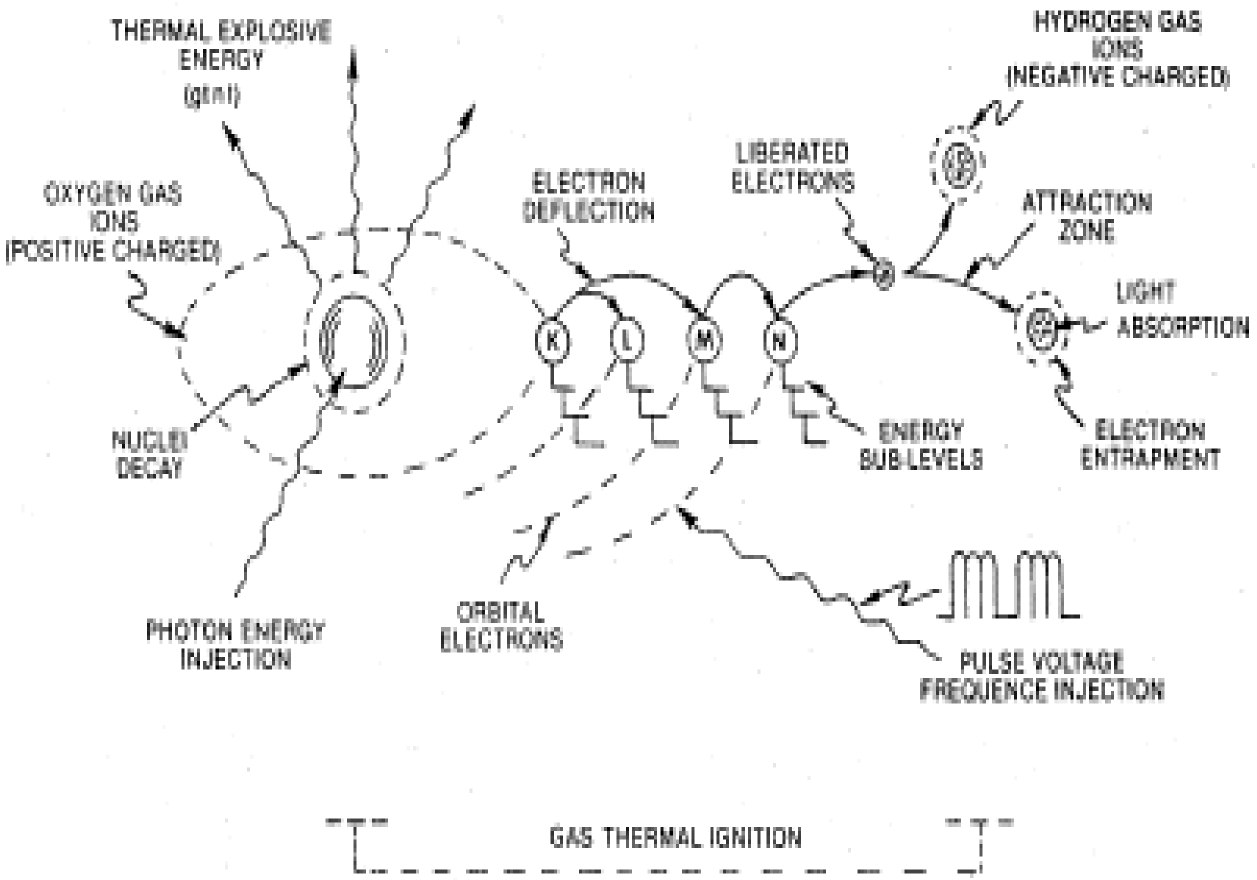
THERMAL EXPLOSIVE ENERGY (gtnt)
HYDROGEN GAS IONS (NEGATIVE CHARGED)
OXYGEN GAS IONS (POSITIVE CHARGED)
ELECTRON DEFLECTION
LIBERATED ELECTRONS
ATTRACTION ZONE
LIGHT ABSORPTION
K
L
M
N
NUCLEI DECAY
ENERGY SUB-LEVELS
ELECTRON ENTRAPMENT
PHOTON ENERGY INJECTION
ORBITAL ELECTRONS
PULSE VOLTAGE FREQUENCE INJECTION
GAS THERMAL IGNITION

Figure 8

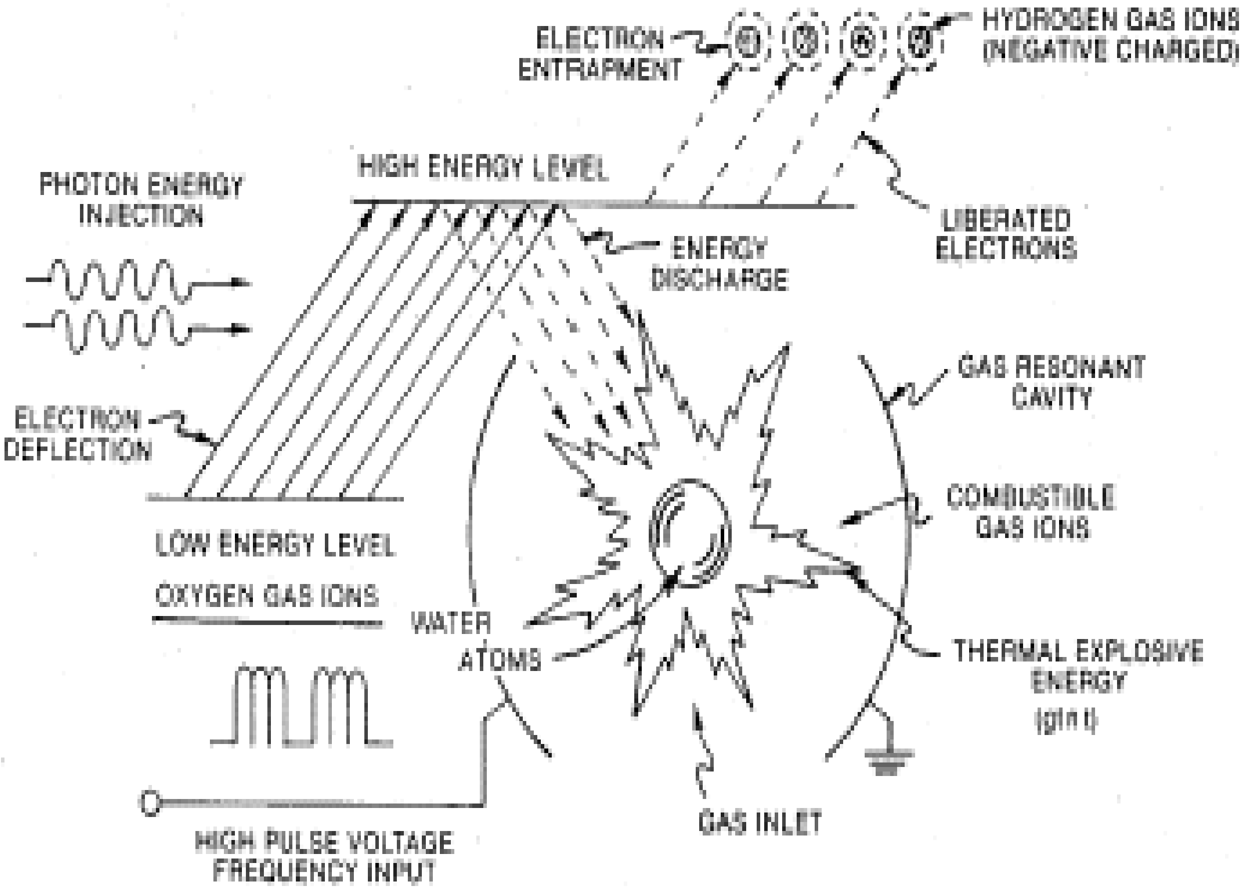
ELECTRON ENTRAPMENT
HYDROGEN GAS IONS (NEGATIVE CHARGED)
HIGH ENERGY LEVEL
PHOTON ENERGY INJECTION
LIBERATED ELECTRONS
ENERGY DISCHARGE
GAS RESONANT CAVITY
ELECTRON DEFLECTION
COMBUSTIBLE GAS IONS
LOW ENERGY LEVEL
OXYGEN GAS IONS
WATER ATOMS
THERMAL EXPLOSIVE ENERGY
(gtnt)
GAS INLET
HIGH PULSE VOLTAGE FREQUENCY INPUT

Figure 9

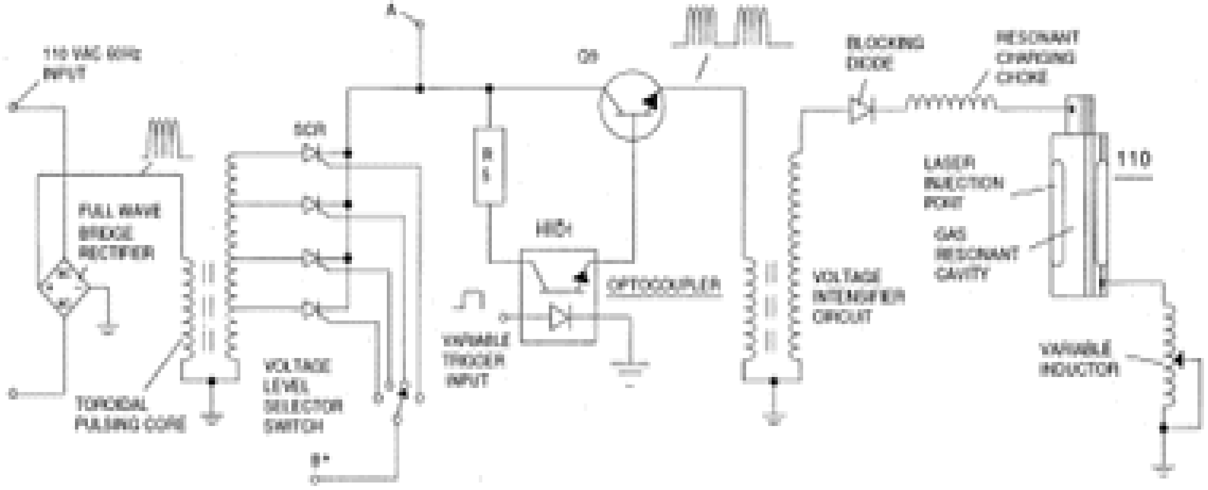
A
110 VAC 60Hz INPUT
Q9
BLOCKING DIODE
RESONANT CHARGING CHOKE
SCR
R 5
FULL WAVE BRIDGE RECTIFIER
110
LASER INJECTION POINT
HID
OPTOCOUPLER
GAS RESONANT CAVITY
VOLTAGE INTENSIFIER CIRCUIT
VARIABLE TRIGGER INPUT
VARIABLE INDUCTOR
TOROIDAL PULSING CORE
VOLTAGE LEVEL SELECTOR SWITCH
B+

Figure 10

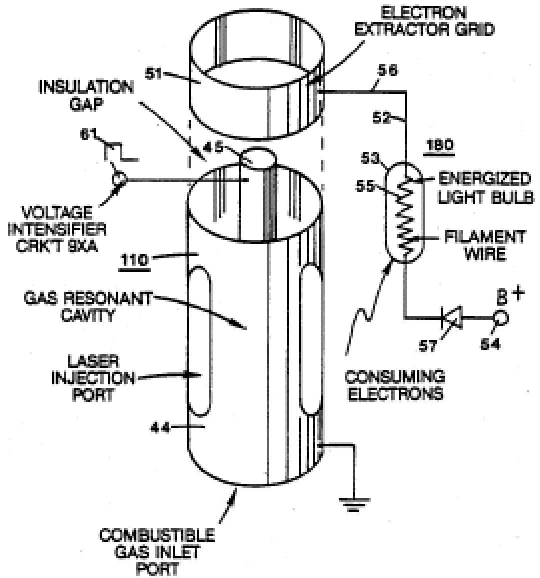

FIG.10

Figure 11

FIG.11

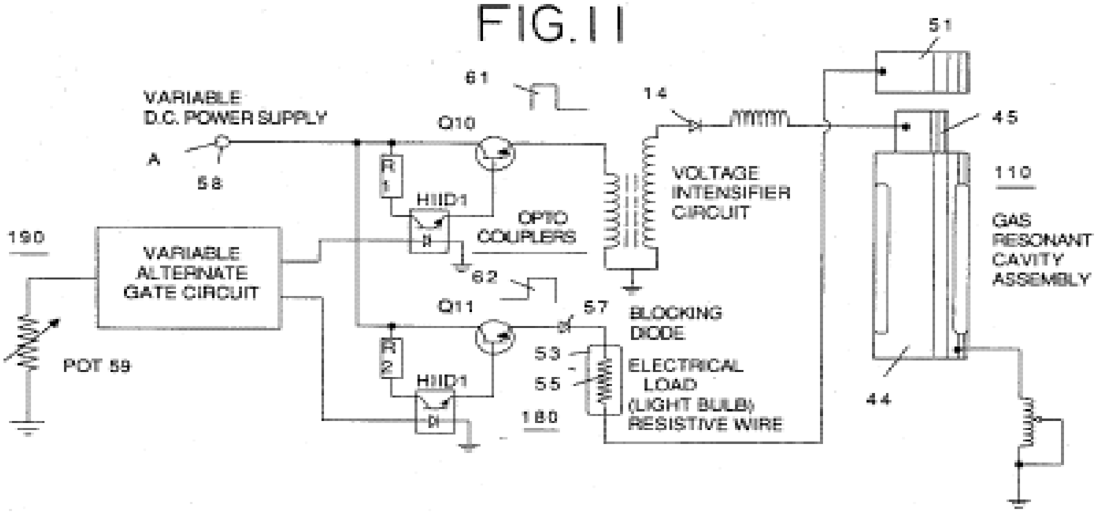

DESCRIPTION OF THE PREFERRED EMBODIMENT

The hydrogen fracturing process follows the sequence of steps shown in the following Table I in which beginning with water molecules, the molecule is subjected to successively increasing electrical, wave energy and thermal forces. In the succession of forces, randomly oriented water molecules are aligned with respect to molecular polar orientation and are themselves polarized and "elongated" by the application of an electric potential to the extent that covalent bonding of the water molecule is so weakened that the atoms disassociate and the molecule breaks down into hydrogen and oxygen elemental components. The released atomic gases are next ionized and electrically charged in a vessel while being subjected to a further energy source that promotes inter-particle impact in the gas at an increased overall energy level. Finally, the atomic particles in the excited gas, having achieved successively higher energy levels, are subjected to a laser or electromagnetic wave energy source that produces atomic destabilization and the final release of thermal explosive energy. Engineering design parameters based on known theoretical principles of atomic physics determine the incremental levels of electrical and wave energy input required to produce resonance in each stage of the system. Instead of a dampening effect, a resonant energization of the molecule, atom or ion provides a compounding energy interaction resulting in the final energy release.

After the first stage in which water is broken down into its atomic components in a mixture of hydrogen, oxygen and formerly dissolved entrapped gasses, the gas atoms become elongated during electron removal as the atoms are ionized. Laser, or light wave energy of a predetermined frequency is injected into a containment vessel in a gas ionization process. The light energy absorbed by voltage stimulated gas nuclei causes destabilization of gas ions still further. The absorbed laser energy causes the gas nuclei to increase in energy state, which, in turn, causes electron deflection to a higher orbital shell.

The electrically charged and laser primed combustible gas ions from a gas resonant cavity may be directed into an optical thermal lens assembly for triggering. Before entry into the optimal thermal lens, however, electrons are stripped from the ions and the atom is destabilized. The destabilized gas ions which are electrically and mass unbalanced atoms having highly energized nuclei are pressurized during spark ignition. The unbalanced, destabilized atomic components thermally interact; the energized and unstable hydrogen gas nuclei collide with highly energized and unstable oxygen gas nuclei, causing and producing thermal explosive energy beyond the gas burning stage. The ambient air gas components in the initial mixture aid the thermal explosive process under a controlled state.
In the process, the point of optimum energy-yield is reached when the electron deficient oxygen atoms (having less than a normal number of electrons) lock onto and capture a hydrogen atom electron prior to or during thermal combustion of the hydrogen/oxygen mixture. Atomic decay results in the release of energy.

In a general outline of the method, a first gas mixture including at least a portion of hydrogen and oxygen gases is provided. The gas mixture is subjected to a pulsating, polar electric field whereby electrons of the gas atoms are distended in their orbital fields by reason of their subjection to electrical polar forces. The polar pulsating frequency applied is such that the pulsating electric field induces a resonance with respect to an election of the gas atom. A cascade effect results, and the energy level of specific resonating electron is increased in cascading, incremental steps.

Next, the gas atoms are ionized and subjected to electro-magnetic wave energy having a predetermined frequency to induce a further election resonance in the ion, whereby the energy level of the election is successively increased. Electrons are extracted from the resonating ions while such ions are in an increased energy state to destabilize the nuclear electron configuration of said ions; and the gas mixture of destabilized ions is thermally ignited.

In the apparatus shown in FIG. 1, water is introduced at inlet 1 into a first stage water fracturing module 2 in which water molecules are broken down into hydrogen, oxygen and released entrapped gas components by an electrical disassociation process and apparatus such as shown in my co-pending application Ser. No. 835,564, filed March 3, 1986, which is incorporated herein by reference. The released atomic gases and other gas components formerly entrapped as dissolved gases in water may be introduced to a successive stage 3 or other number of like resonant cavities, which are arranged in either a series or parallel combined array. The successive energization of the gas atoms provides a cascading effect, successively increasing the voltage stimulation level of the released gasses as they sequentially pass through cavities 2, 3, etc. In a final stage, an injector system 4, of a configuration of the type shown in FIGS. 2A or 2B, receives energized atomic and gas particles where the particles are subjected to further energy input, electrical excitation and thermal stimulation, whereby thermal explosive energy results 5, which may be directed thru a lens assembly of the type shown in FIG. 2C to provide a controlled thermal energy output.

Electromagnetic wave activated and electrically charged gas ions of hydrogen and oxygen (of opposite polarity) are expelled from the cascaded cells 2, 3, etc. The effect of cascading successively increases the voltage stimulation level of the released gases, which then are directed to the final injector assembly 4. In the injector assembly, gas ions are stimulated to a yet higher energy level. The gases are continually exposed to a pulsating laser or other electromagnetic wave energy source together with a high intensity oscillating voltage field that occurs within the cell between electrodes or conductive plates of opposite electrical polarity. A preferred construction material for the plates is a stainless-steel T-304 which is non-chemically reactive with water, hydrogen, or oxygen. An electrically conductive material which is inert in the fluid environment is a desirable material of construction for the electrical field producing plates, through which field the gas stream of activated particles passes. Gas ions of opposite electrical charges reach and maintain a critical energy level state. The gas ions are oppositely electrically charged and subjected to oscillating voltage fields of opposite polarity and are also subjected to a pulsating electromagnetic wave energy source. Immediately after reaching critical energy, the excited gas ions are exposed to a high temperature thermal zone in the injection cell, 4, that causes the excited gas ions to undergo gas combustion. The gas ignition triggers atomic decay and releases thermal energy, 5, with explosive force.

Once triggered, the thermal explosive energy output is controllable by the attenuation of operational parameters. With reference to FIG. 4A, for example, once the frequency of resonance is identified, by varying applied pulse voltage to the initial water fuel cell assemblies, 2, 3, the ultimate explosive energy output is likewise varied. By varying the pulse shape and/or amplitude or pulse train sequence of the electromagnetic wave energy source, final output is varied. Attenuation of the voltage field frequency in the form of OFF and ON pulses likewise affects output of the staged apparatus. Each control mechanism can be used separately, grouped in sections, or systematically arranged in a sequential manner.

The overall apparatus thus includes means for providing a first gas mixture consisting of at least a portion of hydrogen and oxygen gas. The gases may be obtained by disassociation of the water molecule. An electrical circuit of the type shown in FIG. 4 provides a pulsating, polar electric field to the gas mixture as illustrated in FIG. 3A, whereby electrons of the gas atoms are distended in their orbital fields by reason of their subjection to electrical polar forces, changing from the state conceptually illustrated by FIG. 3B to that of FIG. 3C, at a frequency such that the pulsating electric field induces a resonance with respect to electrons of the gas atoms. The energy level of the resonant electrons is thereby increased in cascading, incremental steps. A further electric field to ionize said gas atoms is applied and an electromagnetic wave energy source for subjecting the ionized gas atoms to wave energy of a predetermined frequency to induce a further electron resonance in the ion, whereby the energy level of the election is successively increased is an additional element of the apparatus as shown in FIG. 3D.

An electron sink, which may be in the form of the grid element shown in FIG. 5A, extracts further electrons from the resonating ions while such ions are in an increased energy state and destabilizes the nuclear electron configuration of the ions. The "extraction" of electrons by the sink means is coordinated with the pulsating electrical field of the resonant cavity produced by the circuit of FIG. 4, by means of an interconnected synchronization circuit, such as shown in FIG. 5B. A nozzle, 10 in FIG. 2B, or thermal lens assembly, FIG. 2C, provides the directing means in which the destabilized ions are finally thermally ignited.

As previously noted, to reach and trigger the ultimate atomic decay of the fuel cell gases at the final stage, sequential steps are taken. First, water molecules are split into component atomic elements (hydrogen and oxygen gases) by a voltage stimulation process called the electrical polarization process which also releases dissolved gases entrapped in the water (See my copending application for letters patent, Ser. No. 835, 564, supra). In the injector assembly, a laser produced light wave or other form of coherent electromagnetic wave energy capable of stimulating a resonance within the atomic components is absorbed by the mixture of gases (hydrogen/oxygen/ambient air gases) released by the polarization process. At this point, as shown in FIG. 3B, the individual atoms are subjected to an electric field to begin an ionization process.

The laser or electromagnetic wave energy is absorbed and causes gas atoms to lose electrons and form positively charged gas ions. The energized hydrogen atoms which, as ionized, are positively charged, now accept electrons liberated from the heavier gases and attract other negatively charged gas ions as conceptually illustrated in FIG. 3C. Positively and negatively charged gas ions are re-exposed to further pulsating energy sources to maintain random distribution of ionized atomic gas particles.

The gas ions within the wave energy chamber are subjected to an oscillating high intensity voltage field in a chamber 11 in FIGS. 2A and 2B formed within electrodes 12 and 13 in FIGS. 2A and 2B of opposite electrical polarity to produce a resonant cavity. The gas ions reach a critical energy state at a resonant state.

At this point, within the chamber, additional electrons are attracted to said positive electrode; whereas, positively charged ions or atomic nuclei are attracted to the negative electrode. The positive and negative attraction forces are co-ordinate and operate on said gas ions simultaneously; the attraction forces are non-reversible. The gas ions experience atomic component deflection approaching the point of electron separation. At this point electrons are extracted from the chamber by a grid system such as shown in FIG. 5A. The extracted electrons are consumed and prevented from re-entering the chamber by a circuit such as shown in FIG. 5B. The elongated gas ions are subjected to a thermal heat zone to cause gas ignition, releasing thermal energy with explosive force. During ionic gas combustion, highly energized and stimulated atoms and atom nuclei collide and explode during thermal excitation. The hydrogen fracturing process occurring sustains and maintains a thermal zone, at a temperature in excess of normal hydrogen/oxygen combustion temperature, to wit, in excess of 2500.degree. F. To cause and maintain atomic elongation depicted in FIG. 3C before gas ignition, a voltage intensifier circuit such as shown in FIG. 4 is utilized as a current restricting voltage source to provide the excitation voltage applied to the resonant cavity. At the same time the interconnected electron extractor circuit, FIG. 5B, prevents the reintroduction of electrons back into the system. Depending on calculated design parameters, a predetermined voltage and frequency range may be designed for any particular application or physical configuration of the apparatus.

In the operation of the assembly, the pulse train source for the gas resonant cavity shown at 2 and 3 in FIG. 1 may be derived from a circuit such as shown in FIG. 4. It is necessary in the final electron extraction that the frequency with which electrons are removed from the system by sequenced and synchronized with the pulsing of the gas resonant cavity In the circuit of FIG. 5B, the coordination or synchronization of the circuit with the circuit of FIG. 4 may be achieved by interconnecting point "A" of the gate circuit of FIG. 5B to coordinate point "A" of the pulsing circuit of FIG. 4.

Together the hydrogen injector assembly 4 and the resonant cavity assemblies 2, 3 form a gas injector fuel cell which is compact, light in weight and design variable. For example, the hydrogen injector system is suited for automobiles and jet engines. Industrial applications require larger systems. For rocket engine applications, the hydrogen gas injector system is positioned at the top of each resonant cavity arranged in a parallel cluster array. If resonant cavities are sequentially combined in a parallel/series array, the hydrogen injection assembly is positioned after the exits of said resonant cavities are combined.

From the outline of physical phenomena associated with the process described in Table 1, the theoretical basis of the invention considers the respective states of molecules, gases and ions derived from liquid water. Before voltage stimulation, water molecules are randomly dispersed throughout water within a container. When a unipolar voltage pulse train such as shown in FIG. 3A (53a xxx 53n) is applied, an increasing voltage potential is induced in the molecules, gases and/or ions in a linear, step-like charging effect. The electrical field of the particles within a chamber including the electrical field plates increases from a low energy state (A) to a high energy state (J) in a step manner following each pulse-train as illustrated in FIG. 3A. The increasing voltage potential is always positive in direct relationship to negative ground potential during each pulse. The voltage polarity on the plates which create the voltage fields remains constant. Positive and negative voltage "zones" are thus formed simultaneously.

In the first stage of the process described in Table 1, because the water molecule naturally exhibits opposite electrical fields in a relatively polar configuration (the two hydrogen atoms are positively electrically charged relative to the negative electrically charged oxygen atom), the voltage pulse causes initially randomly oriented water molecules in the liquid state to spin and orient themselves with reference to positive and negative poles of the voltage fields applied. The positive electrically charged hydrogen atoms of said water molecule are attracted to a negative voltage field; while, at the same time, the negative electrically charged oxygen atoms of the same water molecule an attracted to a positive voltage field. Even a slight potential difference applied to the inert, conductive plates of a containment chamber will initiate polar atomic orientation within the water molecule based on polarity differences.
When the potential difference applied causes the orientated water molecules to align themselves between the conductive plates, pulsing causes the voltage field intensity to be increased

in accordance with FIG. 3A. As further molecular alignment occurs, molecular movement is hindered. Because the positively charged hydrogen atoms of said aligned molecules are attracted in a direction opposite to the negatively charged oxygen atoms, a polar charge alignment or distribution occurs within the molecules between said voltage zones, as shown in FIG. 3B. And as the energy level of the atoms subjected to resonant pulsing increases, the stationary water molecules become elongated as shown in FIG. 3C. Electrically charged nuclei and electrons are attracted toward opposite electrically charged voltage zones--disrupting the mass equilibriums of the water molecule.

In the first stage, as the water molecule is further exposed to a potential difference, the electrical force of attraction of the atoms within the molecule to the electrodes of the chamber also increases in intensity. As a result, the covalent bonding between said atoms which forms the molecule is weakened and ultimately terminated. The negatively charged electron is attracted toward the positively charged hydrogen atoms, while at the same time, the negatively charged oxygen atoms repel electrons.

Once the applied resonant energy caused by pulsation of the electrical field in the cavities reaches a threshold level, the disassociated water molecules, now in the form of liberated hydrogen, oxygen, and ambient air gases begin to ionize and loss or gain electrons during the final stage in the injector assembly. Atom destabilization occurs and the electrical and mass equilibrium of the atoms is disrupted. Again, the positive field produced within the chamber or cavity that encompasses the gas stream attracts negatively charged ions while the positively charged ions (and/or hydrogen nuclei) are attracted to the negative field. Atom stabilization does not occur because the pulsating voltage applied is repetitive without polarity change. A potential of approximately several thousand volts triggers the ionization state.

As the ionized particles accumulate within said chamber, the electrical charging effect is again an incremental stepping effect that produces an accumulative increased potential while, at the same time, resonance occurs. The components of the atom begin to "vibrate" at a resonant frequency such that an atomic instability is created. As shown in FIG. 3D, a high energy level is achieved, which then collapses resulting in the release of thermal explosive energy. Particle impact occurs when liberated ions in a gas are subjected to further voltage. A longitudinal cross section of a gas resonant cavity is shown in FIG. 2A. To promote gas ionization, electromagnetic wave energy such as a laser or photon energy source of a predetermined wavelength and pulse-intensity is directed to and absorbed by the ions forming said gas. In the device of FIG. 2A, semiconductor optical lasers 20a-20p, 20xxx surround the gas flow path. In the device of FIG. 2B, photon energy 20 is injected into a separate absorption chamber 21. The incremental stimulation of nuclei to a more highly energized state by electromagnetic wave energy causes electron deflection to a higher orbital state. The Pulse rate as well as intensity of the electromagnetic wave source is varied to match the absorption rate of ionized particles to produce the stepped incremental increase in energy. A single laser coupled by means of fibre optic light guides is an alternative to the plurality of lasers shown in FIG. 2B. Continued exposure of the gas ions to different forms of wave energy during voltage stimulation maintains individual atoms in a destabilized state and prevents atomic stabilization.

The highly energized gas ions are thermally ignited when said combustible gas ions pass from injector 4 and enter into and pass through a nozzle, 10 in FIG. 2B, or an optical thermal lens assembly such as shown in FIG. 2C. In FIG. 2C, the combustible gas ions are expelled through and beyond a quenching circuit, 30, and reflected by lenses, 31 and 32, back and forth through a thermal heat zone, 33, prior to atomic breakdown beyond exiting through a final port, 34. A quenching circuit is a restricted orifice through which the particle stream passes such that flashback does not occur. (See my application Ser. No. 835, 564, supra.) The deflection shield or lens, 31, superheats beyond 3,000. degree. F. and the combustible gas ions passing through said exiting ports are regulated to allow a gas pressure to form inside said thermal zone. The energy yield is controlled by varying the applied voltage, or Pulse-train since said thermal-lens assembly is self-adjusting to the flowrate of said ionized and primed gases. The combustible ionic gas mixture is composed of hydrogen, oxygen, and ambient air gases. The hydrogen gas provides the thermal explosive force, the oxygen atoms aid the gas thermal ignition, and the ambient air gases retard the gas thermal ignition process to a controllable state. As the combustible gas mixture is exposed to a voltage pulse train, the stepped increasing voltage potential causes said moving gas atoms to become ionized (losing or gaining electrons) and changes the electrical and mass equilibrium of said atoms. Gases that do not undergo the gas ionization process may accept the liberated electrons (electron entrapment) when exposed to light or photon stimulation. The electron extractor grid circuit, FIGS. 5A and 5B, is applied to the assembly of FIG. 2A or FIG. 2B and restricts electron replacement. The extractor grid, 56, is applied adjacent to electric field producing members, 44 and 45, within the resonant cavity. The gas ions incrementally reach a critical state which occurs after a high energy resonant state. At this point the atoms no longer tolerate the missing electrons, the unbalanced electrical field, and the energy stored in the nucleus. Immediate collapse of the system occurs, and energy is released as the atoms decay into thermal explosive energy.

The repetitive application of a voltage pulse train (A through J of FIG. 3A) incrementally achieves the critical state of said gas ions. As the gas atoms or ions (la xxx ln) shown in FIG. 3C become elongated during electron removal, electromagnetic wave energy of a predetermined frequency and intensity is injected. The wave energy absorbed by the stimulated gas nuclei and electrons causes further destabilization of the ionic gas. The absorbed energy from all sources causes the gas nuclei to increase in energy state and induces the ejection of electrons from the nuclei.

To further stimulate the electron entrapment process beyond the atomic level (capturing the liberated electrons during the hydrogen fracturing process) the electron extractor grid (as shown in FIG. 5A) is placed in spaced relationship to the gas resonant cavity structure shown in FIG. 2A. The electron extractor grid is attached to an electrical circuit (such as shown in FIG. 5B) that allows electrons to flow to an electrical load, 55, when a positive electrical potential is placed on the opposite side of said electrical load. The electrical load may be a typical power consuming device such as a light bulb or resistive heat producing device. As the positive electrical potential is switched on or pulse-applied, the negative charged electrons liberated in the gas resonant cavity are drawn away and enter into resistive load where they are consumed and released as heat or light energy. The consuming electrical circuit can be directly connected to the gas resonant cavity positive electrical voltage zone. The incoming positive wave form applied to resonant cavity voltage zone through a blocking diode is synchronized with the pulse train applied to the gas resonant cavity by the circuit of FIG. 4 via alternate gate circuit. As one pulse train is gated "ON," the other pulse train is switched "OFF." A blocking diode directs the

electron flow to said electrical load while resistive wire prevents voltage leakage during pulse train "ON" time.
The electron extraction process is maintained during gas flow-rate change by varying the trigger pulse rate in relationship to applied voltage. The electron extraction process also prevents spark-ignition of the combustible gases travelling through the gas resonant cavity because electron build-up and potential sparking is prevented.

In an optical thermal lens assembly or thrust-nozzle, such as shown in FIG. 2C, destabilised gas ions (electrically and mass unbalanced gas atoms having highly energized nuclei) can be pressurized during spark-ignition. During thermal interaction, the highly energized and unstable hydrogen gas nuclei collide with the highly energized and unstable oxygen gas nuclei and produce thermal explosive energy beyond the gas burning stage. Other ambient air gases and ions not otherwise consumed limit the thermal explosive process.

Variations of the process and apparatus may be evident to those skilled in the art.

4.0.1.3. Method for the Production of a Fuel Gas; USP #: 4,936,961; (26.06.1990).

Related Application: This is a continuation-in-part of my co-pending application Ser.; No. 081,859, filed 8/5/87, now U.S. Pat. No. 4,826, 581.
Field of Invention: This invention relates to a method of and apparatus for obtaining the release of a fuel gas mixture including hydrogen and oxygen from water.

BACKGROUND OF THE PRIOR ART

Numerous processes have been proposed for separating a water molecule into its elemental hydrogen and oxygen components. Electrolysis is one such process. Other processes are described in the United States patents such as 4,344,831; 4,184,931; 4,023,545; 3,980, 053; and Patent Cooperation Treaty Application No. PCT/US80/1362, Published 30 April, 1981.

OBJECTS OF THE INVENTION

It is an object of the invention to provide a fuel cell and a process in which molecules of water are broken down into hydrogen and oxygen gases, and other formerly dissolved within the water is produced. As used herein the term "fuel cell" refers to a single unit of the invention comprising a water capacitor cell, as hereinafter explained, that produces the fuel gas in accordance with the method of the invention.
Brief Description of the Drawings

FIG. 1 illustrates a circuit useful in the process.

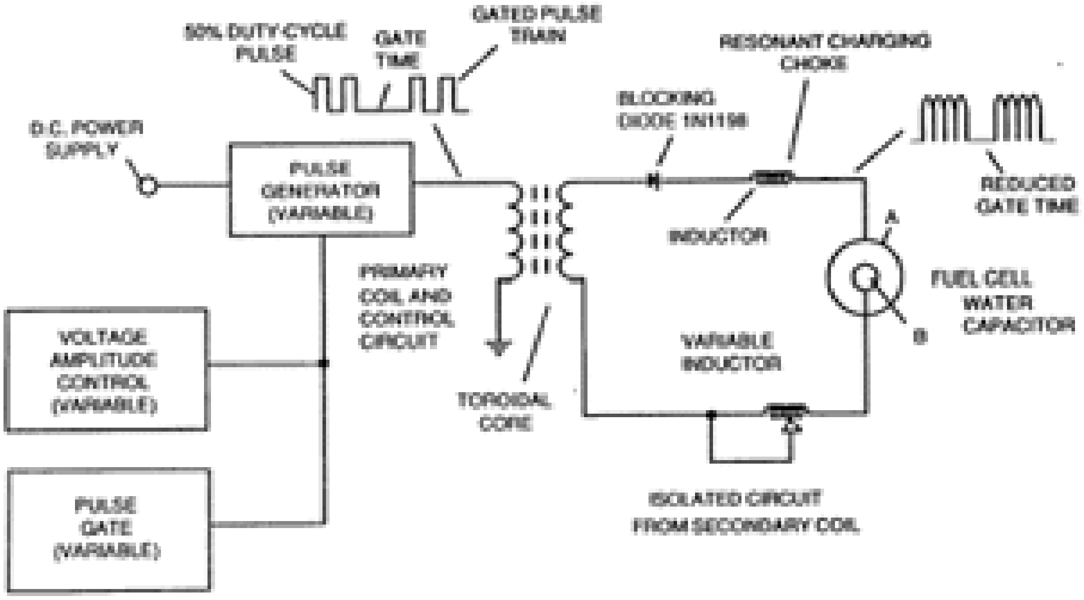

Meine Anmerkungen dazu:
Bei obige Abbildung bin ich der Meinung, die Wasserkondensatoranschlüsse sind falsch und müssen vertauscht werden.

Ich glaube Stanley Meyer stellte sich das so vor, daß die Rechteckimpulse von der Sekundärspule des Ringkerns durch die Diode laufen und dann die beiden Luftspulen aufladen. Sobald der Rechteckimpuls abreißt sollen sich die Luftspulen entladen und so die Frequenz verdoppeln. Wie man das jetzt genau zu verstehen hat ist mir unklar, erst ein Rechteckimpuls und dann ein Luftspulenimpuls?

Wir verstehen allerdings auch nicht wie sich die Luftspulen entladen sollen, denn der Strom verläuft ja nun in die entgegengesetzte Richtung, in dieser Richtung sperrt jedoch die Diode. Das einzige was wir uns vorstellen können ist das durch die parasitäre Kapazität der Diode in Sperrrichtung ein neuer Schwingkreis entsteht mit einer ziemlich hohen Resonanzfrequenz.

Oder hat es etwas mit der Sperrzeit der Diode zu tun?

Nach Angabe von Stanley Meyer soll die Diode nur als Sperrglied dienen und lediglich über eine möglichst hohe Schaltgeschwindigkeit verfügen. Weiterhin gibt er an das die Wassermoleküle erst oberhalb 1000V gedehnt werden können, was bedeutet das die Diode mindestens 1000V in Sperrrichtung aushalten können sollte (denke ich mal, es sei denn der Durchbruch ist erwünscht). Die Diode 1N1198 die Stanley Meyer u. a. vorschlägt gibt es in den unterschiedlichsten Spannungen bis zu 1200V, ich schätze mal das er auch diese verwendet hat. Leider gibt es diese nicht so einfach zu kaufen, bei www.Reichelt.de könnte man z.B. eine ebenfalls schnellschaltende BY329/1200V/8A bestellen.

FIG. 2 shows a perspective of a "water capacitor" element used in the fuel cell circuit.

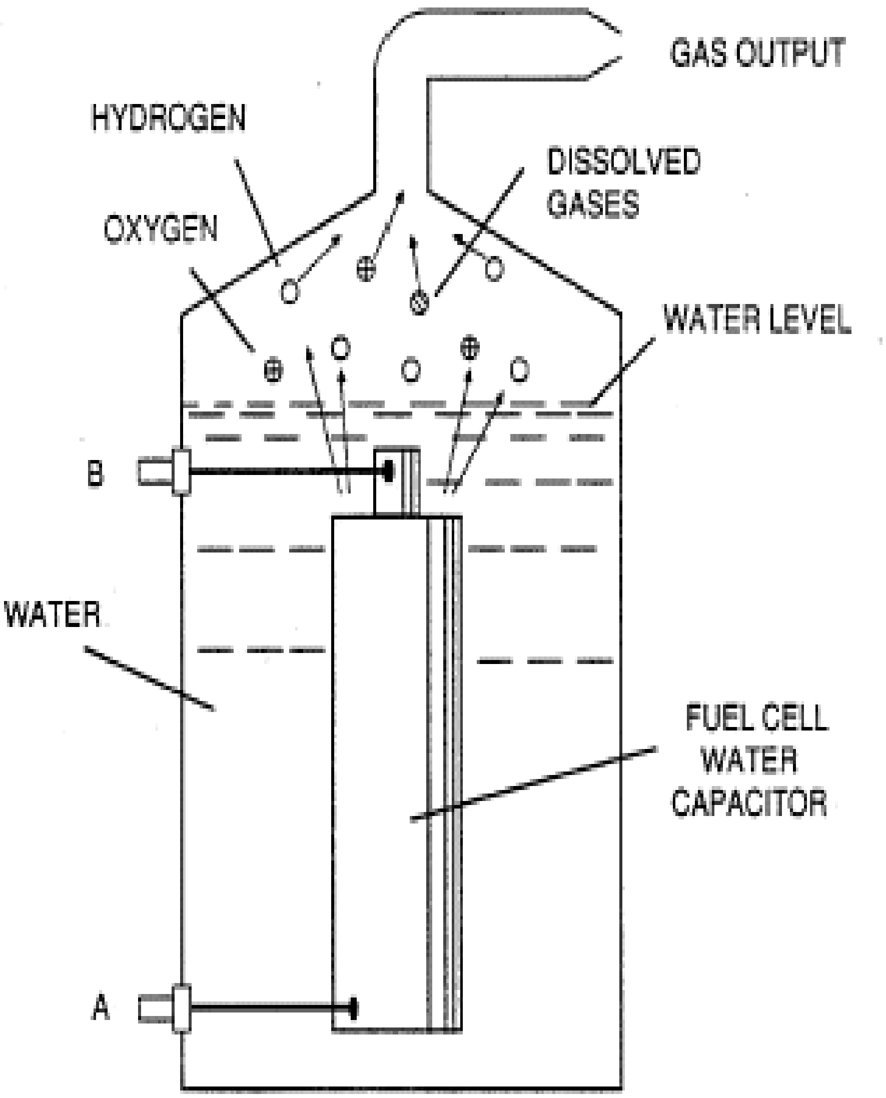

FIGS. 3A through 3F are illustrations depicting the theoretical bases for the phenomena encountered during operation of the invention herein.

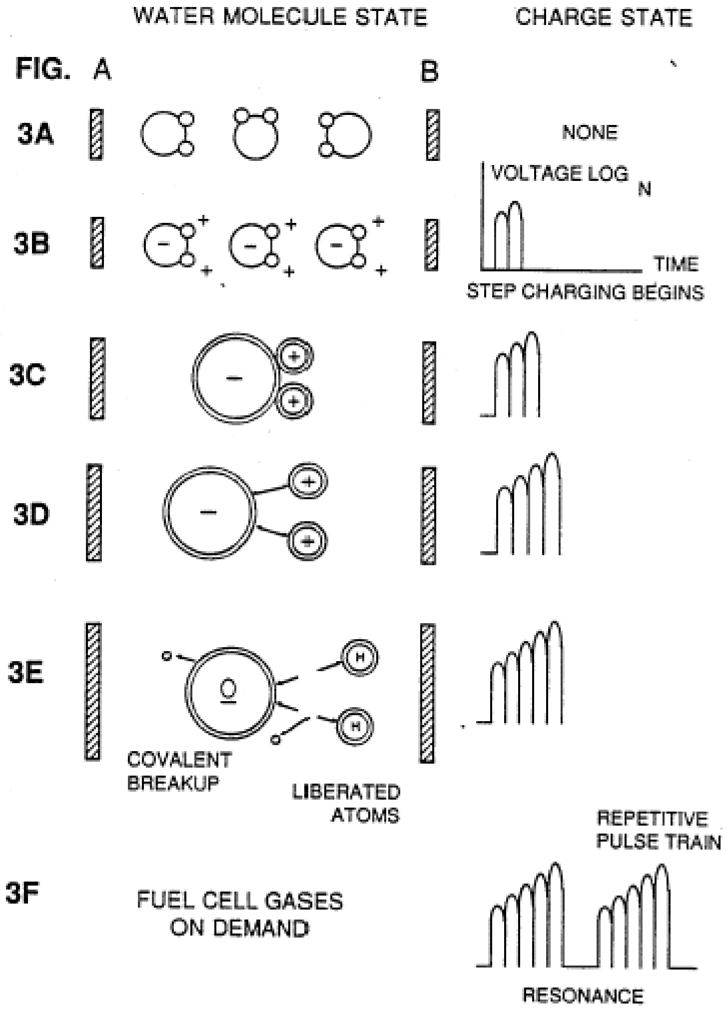

Description of the Preferred Embodiment:

In brief, the invention is a method of obtaining the release of a gas mixture including hydrogen on oxygen and other dissolved gases formerly entrapped in water, from water consisting of:

(A) providing a capacitor, in which the water is included as a dielectric liquid between capacitor plates, in a resonant charging choke circuit that includes an inductance in series with the capacitor;

(C) further subjecting in said capacitor to said pulsating electric field to achieve a pulse frequency such that the pulsating electric field induces a resonance within the water molecule;

(D) continuing the application of the pulsating frequency to the capacitor cell after resonance occurs so that the energy level within the molecule is increased in cascading incremental steps in proportion to the number of pulses;

(E) maintaining the charge of said capacitor during the application of the pulsing field, whereby the co-valent electrical bonding of the hydrogen and oxygen atoms within said molecules is destabilized such that the force of the electrical field applied, as the force is effective within the molecule, exceeds the bonding force of the molecule, and hydrogen and oxygen atoms are liberated from the molecule as elemental gases; and

(F) collecting said hydrogen and oxygen gases, and any other gases that were formerly dissolved within the water and discharging the collected gases as a fuel gas mixture.

The process follows the sequence of steps shown in the following Table 1 in which water molecules are subjected to increasing electrical forces. In an ambient state, randomly oriented water molecules are aligned with respect to a molecule polar orientation.

They are next, themselves polarized and "elongated" by the application of an electrical potential to the extent that covalent bonding of the water molecule is so weakened that the atoms dissociate, and the molecule breaks down into hydrogen and oxygen elemental components.

Engineering design parameters based on known theoretical principles of electrical circuits determine the incremental levels of electrical and wave energy input required to produce resonance in the system whereby the fuel gas comprised of a mixture of hydrogen, oxygen, and other gases such as air were formerly dissolved within the water, is produced.

TABLE 1

Process Steps:

The sequence of the relative state of the water molecule and/or hydrogen/oxygen/other atoms:

A. (ambient state) random
B. Alignment of polar fields
C. Polarization of molecule
D. Molecular elongation
E. Atom liberation by breakdown of covalent bond
F. Release of gases

In the process, the point of optimum gas release is reached at a circuit resonance. Water in the fuel cell is subjected to a pulsating, polar electric field produced by the electrical circuit whereby the water molecules are distended by reason of their subjection to electrical polar forces of the capacitor plates.

The polar pulsating frequency applied is such that the pulsating electric field induces a resonance in the molecule. A cascade effect occurs, and the overall energy level of specific water molecules is increased in cascading, incremental steps.

The hydrogen and oxygen atomic gases, and other gas components formerly entrapped as dissolved gases in water, are released when the resonant energy exceeds the covalent bonding force of the water molecule. A preferred construction material for the capacitor plates is stainless steel T-304 which is non-chemical reactive with water, hydrogen, or oxygen.

An electrically conductive material which is inert in the fluid environment is a desirable material of construction for the electrical field plates of the "water capacitor" employed in the circuit.

Once triggered, the gas output is controllable by the attenuation of operational parameters. Thus, once the frequency of resonance is identified, by varying the applied pulse voltage to the water fuel cell assembly, gas output is varied.
By varying the pulse shape and/or amplitude or pulse train sequence of the initial pulsing wave source, final gas output is varied. Attenuation of the voltage field frequency in the form of OFF and ON pulses likewise affects output.

The overall apparatus thus includes an electrical circuit in which a water capacitor having a known dielectric property is an element. The fuel gases are obtained from the water by the disassociation of the water molecule. The water molecules are split into component atomic elements (hydrogen and oxygen gases) by a voltage stimulation process called the electrical polarization process which also releases dissolved gases entrapped in the water.

From the outline of physical phenomena associated with the process described in Table 1, the theoretical basis of the invention considers the respective states of molecules and gases and ions derived from liquid water. Before voltage stimulation, water molecules are randomly dispersed throughout water in a container.

When a unipolar voltage pulse train such as shown in FIGS. 3B through 3F is applied to positive and negative capacitor plates, an increasing voltage potential is induced in the molecules in a linear, step like charging effect.

The electrical field of the particles within a volume of water including the electrical field plates increases from a low energy state to a high energy state successively is a step manner following each pulse-train as illustrated figuratively in the depictions of FIG. 3A through 3F.

The increasing voltage potential is always positive in direct relationship to negative ground potential during each pulse. The voltage polarity on the plates which create the voltage fields remains constant although the voltage charge increases. Positive and negative voltage "zones" are thus formed simultaneously in the electrical field of the capacitor plates.

In the first stage of the process described in Table 1, because the water molecule naturally exhibits opposite electrical fields in a relatively polar configuration (the two hydrogen atoms are positively electrically charged relative to the negative electrically charged oxygen atom), the voltage pulse causes initially randomly oriented water molecules in the liquid state to spin and orient themselves with reference to positive and negative poles of the voltage fields applied.

The positive electrically charged hydrogen atoms of said water molecule are attracted to a negative voltage field; while, at the same time, the negative electrically charged oxygen atoms of the same water molecule are attracted to a positive voltage field.

Even a slight potential difference applied to inert, conductive plates of a containment chamber which forms a capacitor will initiate polar atomic orientation within the water molecule based on polarity differences.

When the potential difference applied causes the orientated water molecules to align themselves between the conductive plates, pulsing causes the voltage field intensity to be increased in accordance with FIG. 3B. As further molecule alignment occurs, molecular movement is hindered.

Because the positively charged hydrogen atoms of said aligned molecules are attracted in a direction opposite to the negatively charged oxygen atoms, a polar charge alignment or distribution occurs within the molecules between said voltage zones, as shown in FIG. 3B. And as the energy level of the atoms subjected to resonant pulsing increases, the stationary water molecules become elongated as shown in FIGS. 3C and 3D. Electrically charged nuclei and electrons are attracted toward opposite electrically charged equilibrium of the water molecule. As the water molecule is further exposed to an increasing potential difference resulting from the step charging of the capacitor, the electrical force of attraction of the atoms within the molecule to the capacitor plates of the chamber also increase in strength. As a result, the covalent bonding between which form the molecule is weakened --- and ultimately terminated. The negatively charged electron is attracted toward the positively charged hydrogen atoms, while at the same time, the negatively charged oxygen atoms repel electrons.

In a more specific explanation of the "sub-atomic" action the occurs in the water fuel cell, it is known that natural water is a liquid which has a dielectric constant of 78.54 at 20 degrees C. and 1 atm pressure. [Handbook of Chemistry & Physics, 68th ed., CRC Press (Boca Raton, Florida (1987-88)), Section E-50. H20(water)].

When a volume of water is isolated and electrically conductive plates, that are chemically inert in water and are separated by a distance, are immersed in water, a capacitor is formed, having a capacitance determined by the surface area of the plates, the distance of their separation and the dielectric constant of water.

When water molecules are exposed to voltage at a restricted current, water takes on an electrical charge. By the laws of electrical attraction, molecules align according to positive and negative polarity fields of the molecule and the alignment field. The plates of the capacitor constitute such as alignment field when a voltage is applied.

When a charge is applied to a capacitor, the electrical charge of the capacitor equals the applied voltage charge; in a water capacitor, the dielectric property of water resists the flow of amps in the circuit, and the water molecule itself, because it has polarity fields formed by the relationship of hydrogen and oxygen in the covalent bond, and intrinsic dielectric property, becomes part of the electrical circuit, analogous to a "microcapacitor" within the capacitor defined by the plates.

In the Example of a fuel cell circuit of FIG. 1, a water capacitor is included. The step-up coil is formed on a conventional toroidal core formed of a compressed ferromagnetic powered material that will not itself become permanently magnetized, such as the trademarked "Ferramic 06# "Permag" powder as described in Siemens Ferrites Catalog, CG-2000-002-121, (Cleveland, Ohio) No. F626-1205". The core is 1.50 inch in diameter and 0.25 inch in thickness. A primary coil of 200 turns of 24-gauge copper wire is provided and coil of 600 turns of 36 gauge wire comprises the secondary winding.

In the circuit of FIG 1, the diode is a 1N1198 diode which acts as a blocking diode and an electric switch that allows voltage flow in one direction only. Thus, the capacitor is never subjected to a pulse of reverse polarity.

The primary coil of the toroid is subject to a 50% duty cycle pulse. The toroidal pulsing coil provides a voltage step-up from the pulse generator in excess of five times, although the relative amount of step-up is determined by preselected criteria for a particular application. As the stepped-up pulse enters first inductor (formed from 100 turns of 24 gauge wire 1 inch in diameter), an electromagnetic field is formed around the inductor, voltage is switched off when the pulse ends, and the field collapses and produces another pulse of the same polarity i.e., another positive pulse is formed where the 50% duty cycle was terminated. Thus, a double pulse frequency is produced; however, in pulse train of unipolar pulses, there is a brief time when pulses are not present.

By being so subjected to electrical pulses in the circuit of FIG. 1, water confined in the volume that includes the capacitor plates takes on an electrical charge that is increased by a step charging phenomenon occurring in the water capacitor. Voltage continually increases (to about 1000 volts and more) and the water molecules starts to elongate.

The pulse train is then switched off; the voltage across the water capacitor drops to the amount of the charge that the water molecules have taken on, i.e., voltage is maintained across the charged capacitor. The pulse train is the reapplied.

Because a voltage potential applied to a capacitor can perform work, the higher the voltage the higher the voltage potential, the more work is performed by a given capacitor. In an optimum capacitor that is wholly non-conductive, zero (0) current flow will occur across the capacitor.
Thus, in view of an idealized capacitor circuit, the object of the water capacitor circuit is to prevent electron flow through the circuit, i.e. such as occurs by electron flow or leakage through a resistive element that produces heat.
Electrical leakage in the water will occur, however, because of some residual conductivity and impurities or ions that may be otherwise present in the water. Thus, the water capacitor is preferably chemically inert. An electrolyte is not added to the water.

In the isolated water bath, the water molecule takes on charge, and the charge increases. The object of the process is to switch off the covalent bonding of the water molecule and interrupt the subatomic force, i.e. the electrical force or electromagnetic force, that binds the hydrogen and oxygen atoms to form a molecule so that the hydrogen and oxygen separate.

Because an electron will only occupy a certain electron shell (shells are well known) the voltage applied to the capacitor affects the electrical forces inherent in the covalent bond. As a result of the charge applied by the plates, the applied force becomes greater than the force of the covalent bonds between the atom of the water molecule; and the water molecule becomes elongated. When this happens, the time share ratio of the electron shells is modified.

In the process, electrons are extracted from the water bath; electrons are not consumed nor are electrons introduced into the water bath by the circuit as electrons are conventionally introduced in as electrolysis process. There may nevertheless occur a leakage current through the water.

Those hydrogen atoms missing electrons become neutralized; atoms are liberated from the water. The charged atoms and electrons are attracted to the opposite polarity voltage zones created between the capacitor plates. The electrons formerly shared by atoms in the water covalent bond are reallocated such that neutral elemental gases are liberated.

In the process, the electrical resonance may be reached at all levels of voltage potential. The overall circuit is characterized as a "resonant charging choke" circuit which is an inductor in series with a capacitor that produces a resonant circuit. [SAMS Modern Dictionary of Electronics, Rudolf Garff, copyright 1984, Howard W. Sams & Co. (Indianapolis, Ind.), page 859.]

Such a resonant charging choke is on each side of the capacitor. In the circuit, the diode acts as a switch that allows the magnetic field produced in the inductor to collapse, thereby doubling the pulse frequency and preventing the capacitor from discharging. In this manner a continuous voltage is produced across the capacitor plates in the water bath; and the capacitor does not discharge. The water molecules are thus subjected to a continuously charged field until the breakdown of the covalent bond occurs.

As noted initially, the capacitance depends on the dielectric properties of the water and the size and separation of the conductive elements forming the water capacitor.

EXAMPLE 1

In an example of the circuit of FIG. 1 (in which other circuit element specifications are provided above), two concentric cylinders 4 inches long formed the water capacitor of the fuel cell in the volume of water. The outside cylinder was 0.75 inch in outside diameter; the inner cylinder was 0.5 inch in outside diameter.

Spacing from the outside of the inner cylinder to the inner surface of the outside cylinder was 0.0625 inch. Resonance in the circuit was achieved at a 26 volt applied pulse to the primary coil of the toroid at 0 KHz, and the water molecules disassociated into elemental hydrogen and oxygen and the gas released from the fuel cell comprised a mixture of hydrogen, oxygen from the water molecule, and gases formerly dissolved in the water such as the atmospheric gases or oxygen, nitrogen, and argon.

In achieving resonance in any circuit, as the pulse frequency is adjusted, the flow of amps is minimized, and the voltage is maximized to a peak. Calculation of the resonance frequency of an overall circuit is determined by known means; different cavities have a different frequency of resonance dependent on parameters of the water dielectric, plate size, configuration and distance, circuit inductors, and the like. Control of the production of fuel gas is determined by variation of the period of time between a train of pulses, pulse amplitude and capacitor plate size and configuration, with corresponding value adjustments to other circuit components.

The wiper arm on the second conductor tunes the circuit and accommodates to contaminants in water so that the charge is always applied to the capacitor. The voltage applied determines the rate of breakdown of the molecule into its atomic components. As water in the cell is consumed, it is replaced by any appropriate means or control system.

Variations of the process and apparatus may be evident to those skilled in the art.

Keelynet / Vangard Notes

1N1198 Diode is also a NTE 5995 or a ECG 5994. It is a 40A 600 PIV Diode (the 40A is over kill and may not be needed).

Stainless Steel "T304" is a type of weldable Stainless, but other types should work the same. "T304" is just the more common type of Stainless tubing available.

The outer tube figures out to be 3/4" 16 gauge (.060 "wall") tube (a common size) cut to 4 inch length.
The inner tube figures out to be 1/2" 18 gauge (.049 "wall", this is a common size for this tube, but the actual gauge cannot be figured from this patent documentation, but this size should work) cut to 4 inch length.

You should also attach the two leads to the Stainless, using Stainless solid rod (1/6 dia would do) and USE LEAD FREE SOLDER! (you may want the purified water that is returned to drink some day).

You also need to figure out a way to keep the two tubes separated from each other. This could be done with small pieces of plastic. They cannot block the flow of water into/out of the tubes.
It was not indicated if the inner tube is full of water or not. The guess here is that it is full of water, and this doesn't effect the device at all.

The Patent doesn't say but I would think that insulating the leads with some type of tubing up to the tubes would be electrically correct (and probably wouldn't hurt).
The pulse frequency was not printed, it is estimated from the size of the coils and transformer that the frequency doesn't exceed 50 Mhz. Don't depend on this being fact, it's just a educated guess.

The circuit to do this is not shown, just empty boxes. It's time to get out your SCOPE and try things! Don't forget to share your results with others ! GREED is why this type of thing never gets out into the world to do some GOOD. If you want to make some money, make something PRACTICAL that WORKS and that PEOPLE can use in their every day lives, then sell it! Holding onto information like this only hurts ALL OF US !!

4.0.2.0. Leach Sam Leslie;

Water vapour was injected into a reaction chamber and exposed to **ultraviolet radiation** of a specific wavelength, which ionises the hydrogen and oxygen.

Apparently, the radiation is re-emitted by the atomic gases and so upholds the separation process.

His goal was another method of separating water into hydrogen and oxygen by ionisation through strong ultraviolet radiation.

According to a York Times Special of 20 April 1979, **Sam Leslie Leach**, a professional inventor with several basic patents in the field of optics, has obtained two patents for an invention that he says accomplishes the economic separation of hydrogen and oxygen gases from water.

The process, as described in the article, subjects water vapour injected into a reaction chamber to ultraviolet radiation of a specific wavelength, which ionises the hydrogen and oxygen atoms. Apparently, the radiation is re-emitted by the atomic gases and so upholds the separation process in a self-sustaining way, as long as more water vapor is supplied.

Information in the article is scant of technical detail. No contact address was given.

It appears that Leach ran into a lot of skepticism from scientists contending that his process “could not possibly work”. But for us, it seems it works very well.

4.0.2.2. Electric arc plasma steam generation;

USP #: 4,772,775; September 20, 1988

An electric arc plasma steam generator includes a pair of electrodes for generating the arc plasma, and a housing for enclosing the arc plasma. Jets of water are directed into the arc plasma to convert the water into steam and to ionize the hydrogen and oxygen components of the steam. Arrangements including coils and water jackets are provided for circulating water in proximity to the arc plasma and for super-heating the water contained in the water jacket and/or the coils, which are preferably mounted within the housing. An expansion chamber is connected to receive both the super-heated water, and also the superheated steam from the arc plasma, as the hydrogen and oxygen recombine to form steam once again. The arc plasma in one embodiment may be formed by electrical conduction through a spray of water containing an electrolyte; and in another embodiment electrodes may initially form the arc plasma in air or other gas, and as the electrodes are consumed, they may be advanced by a suitable mechanical arrangements including threads on the electrodes, keyway slots on the electrodes, and stepping motors which serves to advance the electrodes as needed.

FIELD OF THE INVENTION

This invention relates to steam generation.

BACKGROUND OF THE INVENTION

Steam generation is normally accomplished using boilers, and heat transfer tubes with the heat supplied either within or outside of the tubes, and water to be heated on the other side of the walls of the tubes. Steam generation boilers are relatively inefficient, and a principal object of the present invention is to provide a simpler, more efficient system and method for generating steam.

SUMMARY OF THE INVENTION

In accordance with a broad aspect of the present invention, steam is generated by the injection of water, preferably jets of water, into an electric arc plasma. The gas plasma may be formed by ionizing a water spray containing an electrolyte to increase the conductivity of the water. A substantial electrical potential is employed to initiate ionization and to maintain the resultant gas plasma in its ionized state. Water jets may be directed into the plasma arc, thereby reducing the arc temperature, vaporizing the water, and ionizing the hydrogen and oxygen atoms. The partially cooled plasma is directed adjacent heat exchange arrangements, such as coils, through which water is directed, and this water is rapidly super-heated. The super-heated water is then directed to an expansion chamber where the super-heated water expands and becomes steam. In accordance with another embodiment of the invention the arc plasma may be established between two metallic electrodes, and the water jets may be directed into the arc plasma. The electrodes may be very slowly consumable and may be mechanically advanced to maintain the desired arc spacing. As mentioned above, the arc plasma, following some reduction in temperature from the impinging water jets, may come into heat transferring proximity to one or more coils of metal tubing carrying water; and the channel carrying the plasma arc and ionized gases may be enclosed by a water jacket. The flow of water through the jets and through the coils of metal tubing and the water jacket or jackets, are at a rate so that the plasma has cooled to become steam at the remote end of the channel.

With regard to the embodiment of the invention using water containing electrolyte to form the gas plasma arc, the system may include a tank containing a saturated solution of electrolyte in water, and arrangements for diluting the electrolyte solution before spraying it into the active unit, and a sump for collecting electrolyte which has not been converted into steam, and for recirculating the electrolyte into the spray to the arc plasma generator. As another facet of the invention, additional energy may be supplied to the steam generation process by the oxidation of electrode material, or of material which may be added in suspension to the injected water.

It is further noted that the electrodes may be advanced by a mechanism including an elongated electrode which is threaded and provided with an external slot or keyway. The electrode may be either threaded internally and may be rotated by a stepping motor coupled to a gear engaging the keyway; or alternatively, the electrode may be externally threaded, and held against rotation by the keyway while it is advanced by a gear member threaded internally to mate with the external electrode threads, with the gear member having external spur gear teeth which are driven by a stepping motor provided with a drive gear. Other objects, features and advantages of the invention will become apparent for a consideration of the following detailed description, and from the accompanying drawings.

BRIEF DESCRIPTION OF THE DRAWINGS

FIG. 1 is a diagrammatic showing of an electric arc plasma steam generation system illustrating the principles of the present invention; FIG. 2 is a cross-sectional showing of an alternative embodiment of the invention illustrating the principles thereof; FIG. 3 is a diagrammatic showing of the arc plasma and the water injection portion of the system of FIG. 2; FIG. 4 is a diagrammatic showing of one arrangement for advancing the electrodes in the system of FIG. 2;

FIG. 5 is an exploded view of a number of the components of FIG. 2; FIG. 6 is an exploded view showing additional components of the system of FIG. 2; and FIG. 7 is a partial cross-sectional view of a further alternative embodiment of the invention.

DETAILED DESCRIPTION

Referring more particularly to the drawings, the system of FIG. 1 is an electric arc plasma generation system wherein the high voltage electrodes 12 and 14 may be mounted approximately 48 inches apart and may provide an energizing voltage in the order of approximately 2500 volts. A spray of a very dilute solution of water and an electrolyte such as sodium sulphate is supplied from the ceramic member 16 which has a large number of very small diameter holes extending through it from top to bottom. A saturated solution of the sodium sulphate may be maintained in the tank 18 and is supplied through the pipe 20 by the input electrolyte pump 22. The concentrated electrolyte is brought into the section 24 of the input compartment above the spray member 16. Water to dilute the concentrated electrolyte is brought into the chamber 26 in this upper compartment and is mixed with the concentrated electrolyte by use of the mixing plates 28 and 30 which are provided with a series of angled holes to provide thorough mixing of the water with the concentrated electrolyte. Accordingly, by the time the electrolyte reaches the chamber 34 immediately above the spray member 16, it is at a relatively dilute concentration desired for spraying into the chamber 36 where the arc plasma will be formed. Once the arc plasma is formed, the sprayed water will be converted to steam, and the steam will in turn have its components ionized so that the electric arc plasma will include the normal air present in the chamber, and hydrogen and oxygen ions from the water and steam. The very high temperature ionized gases will then flow through the opening 38 into the chamber 40, as a result of the presence of the output pipe 42, coupling chamber 40 with the steam expansion chamber 44 which appears to the right in this FIG. 1 of the drawings. The arc plasma which is formed raises the temperature of the gas to a very high level, in the order of 50,000 to 100,000 degrees Fahrenheit, and these very high temperature ionized gases will be directed vigorously through the opening 38 down the center of the chamber 40.

Water jets are then directed through the nozzles 46 into the center of the plasma. This will have the effect of instantaneously converting the input jets of water into steam, and in many cases into ionized gas particles, and also will have the collateral effect of cooling down the plasma as it passes from left to right through the chamber 40. It may be also noted that the chambers 36 and 40 are provided with water jackets, 48 and 50, respectively through which water flows and is heated. Following flow through the water jackets 48 and 50, water is directed by the metal pipe or tubing 52 to the front turn 54 of the coil 56, serving the function of further heating the water supplied to coil 56, and of further cooling the ions and steam present in the chamber 40 and flowing from left to right therein. By the time the water flowing in coil 56 reaches the output of pipe 58 coupling it to the steam expansion chamber 44, it is at a very high temperature, in the order of a few thousand degree Fahrenheit. Accordingly, when the super-heated water from pipe 58 is permitted to enter the expansion chamber 44, it immediately turns to steam. Concerning other points relative to the system of FIG. 1, it may be noted that the cold water or ambient temperature water is supplied to the system at input of pipes 62 and 64. It may also be noted that the pipes 66 and 68 supply water to jets which spray in toward the center of the chamber 40 from the near side thereof, and similar jets are provided on the rear of the chamber 40, so that water is sprayed into the chamber at least from 8 points, as shown in FIG. 1, and a larger number of input radially directed jets may be employed if desired. Concerning another point, a sump 70 is provided below the electrode 14, with the pump 72 returning the reclaimed electrolyte to the tank 18 including the saturated solution of electrolyte.

A conventional mechanical base 74 and supporting the framework 76 is provided for the unit; and a thick layer of high temperature insulation 78 encloses the entire apparatus, to reduce thermal losses, due to the very high temperatures which are present within the unit. Steam from the expansion chamber 44 is supplied through the large diameter steam delivery channel 82 to power turbines or the like. Steam pressure gauges 83 measure the pressure in chamber 44. Insulation material 85 is provided around the expansion chamber 44 and conduit 82, to reduce heat losses. In the foregoing description of FIG. 1, the system was described wherein the arc is initiated between two electrodes with a spray of water containing a dilute solution of an electrolyte being directed between the two electrodes. In the embodiment of FIG. 2 a different configuration of electrodes is employed, in which a plasma arc is initiated in air or gas between metallic electrodes, and arrangements are provided for advancing the electrodes, as they are consumed or erode. Referring now in detail to FIG. 2, it includes the two electrodes 102 and 104 between which an electric arc plasma is established, by the application of high voltage on the input conductors 106 and 108. The arc between the electrodes 102 and 104 may initially be started as a result of the breakdown of air of other gas present within the chamber 112, with the air or gas being supplied through a conduit 114. Once the electric arc plasma is initiated between electrodes 102 and 104, jets of water are sprayed into the volume 112, from a series of jet spray orifices 116 which are supplied from the input cold or ambient water pipe 118. The input jets of water from the orifices 116 provide the water which is immediately converted to steam and then to ionized gas, principally oxygen, hydrogen and electrons, within the chamber 112. From an overall standpoint, the system is comparable to the system of FIG. 1, in that various heat exchangers are provided to transfer the heat from the electric arc plasma to water from enclosing water jackets and from coils upon which the ionized gases impinge. Finally, the super-heated water is coupled to an expansion chamber (not shown) through the output pipe or tubing 122, while the steam from the main chamber is routed to the expansion chamber through the outupt conduit 124. The foregoing arrangements provide a vigorous left to right flow of the ionized hot gases from the electric arc plasma generation zone 112. Now, considering the water flow in greater detail, it starts from the input pipe or conduit 118 and flows to the water jacket 128 which surrounds the main plasma arc chamber 112, and directs water to each of the jet orifices 116 which open from the water jacket 128. From the water jacket 128, the cooling water flows through the conduit 130 to a water jacket 132 which is coupled to the pipe 130 at the fitting 134. From the water jacket 132, the water is coupled at point 136 to one end of the coil 138. From the end of the coil 138 at point 140, the water flows into an inner water jacket 142, and is coupled by the fitting 144 to conduit 146 which directs the water to water jacket 148 toward the output end of the system of FIG. 2. The tapered or conical coil 150 receives water from the water jacket 148 by the short curved section of tubing 152 leading through the axis of the coil to the front end of the tapered coil 150. The output from the right-hand end of coil 150 is coupled to the output tube 122 leading to the expansion chamber of the type shown in FIG. 1. Radially extending, tapered support vanes 154 support the conical tapered coil 150 in its desired axial position, while permitting free passage of the gases from the arc discharge, now at least principally converted back to superheated steam. These vanes 154 may be made of a machinable ceramic material as noted below.

FIG. 3 is an enlarged diagrammatic showing of the critical electric arc plasma generation zone 112 of the system of FIG. 2. The nozzles 116 by which jets of water are sprayed into the electric arc plasma zone from four directions, are also clearly shown in FIG. 3 of the drawings. In the embodiment as shown in FIG. 3 of the drawings, the exterior surfaces of the electrodes 102

and 104 are threaded, and are also provided with a slot for preventing their rotation. In operation, referring to electrode 104, a stepping motor 122 rotates the spur gear 124 which is turn rotates the mating spur gear 126 which has internal threads in the inner collar 128 which mesh with the exterior threads 130 on the electrode 104. The stationary block 132 has an inwardly extending rib which extends into a longitudinally extending recess (not shown) on the electrode 104, to prevent the rotation of electrode 104, and to constrain the movement of electrode 104 to the linear, axial direction, as the motor 122 is actuated and the gear assembly 126 is rotated. In a similar manner, actuation of the motor 136 associated with the electrode 102 causes the axial forward movement of electrode 102 to compensate for erosion which occurs at the outer end thereof.
Incidentally, when the electrode is formed of iron or an alloy containing substantial quantities of iron, the particles of iron which are oxidized provide additional energy to the system, conforming to the exothermic reaction whereby iron becomes iron oxide.

IG. 4 shows an alternative arrangement for advancing the electrodes in which the electrode 142 has internal threads 144 which mate with the external threads on a fixed threaded member 146 which does not rotate. The collar 148 is provided with a rib which extends into a slotted keyway 150 in the side of the electrode 142, so that the electrode 142 rotate with the spur gear 152 which is secured to the ribbed collar 148. With the spur gear 154 in meshing engagement with the gear 152, when the stepping motor 156 is actuated the electrode 142 will rotate and will be advanced to the right, as a result of its internal engagement with the fixed, non-rotating threaded shaft 146. Of course, the motor 156 and its associated gears 154 and 152, together with the ribbed collar 148 secured to the gear 152, do not move axially with respect to the entire apparatus, but only the electrode moves to the right, as indicated in FIG. 4. In operation, the internally threaded electrode 142 of FIG. 4 operates in substantially the same manner as the externally threaded electrode 104 of FIG. 3, in that, as the motors are energized, the electrodes are advanced.

FIG. 5 shows the water jackets and the water coils, in greater detail, and in a partially exploded view, as compared with the showing of FIG. 2. In general, the parts as shown in FIG. 5 carry the same reference numerals as in FIG. 2. However, certain parts which were unnumbered in FIG. 2 include the input collar 162 which directs ionized gas through the central opening 164 into a heat conducting relationship with the coil 138 and the water jacket 132. Similarly, the outer housing 166, toward the right-hand end of the unit, was not previously mentioned in connection with FIG. 2, nor was the end closure member 168.

FIG. 6 is another exploded view, showing some of the remaining parts of FIG. 2, which were not previously described separately. In FIG. 6, the parts bear the same reference numerals as those used in FIG. 2. Pertinent parts which appear in FIG. 6 which were not specifically mentioned in connection with the description of FIG. 2 will now be identified. The input electrode 102 is enclosed within the stainless-steel bellows 172 to more positively seal the unit against the escape of the high pressure and high energy gases from the arc plasma. Further, the electrode bellows assembly 102, 172 is mounted within the metal cylinder 174 which is closed by a sealing end plate 176. Similarly, the electrode 104 and its associated assembly is mounted within the stainless -steel bellows 178, which is in turn mounted within the transversely extending housing 180 with its enclosing end plate 182. The unit 186 having the enclosing water jacket 128 and having the central electric arc plasma discharge region 112 is also shown separately in FIG. 6. In addition, the ends of unit 186 are shown in an upper end view the inner cylindrical member 190 from which the orifices 116 provide water jets into the zone 112, is also shown separately in FIG. 6. In addition, the ends 192 and 194 are shown in separate views. Finally, to the right in FIG. 6 is shown the heat exchange cylinder 166 which includes, for example, the water jacket 132.

Referring now to FIG. 7 of the drawings, FIG. 7 is a showing of a further alternative input arc discharge assembly which may be employed in the implementation of the invention. The embodiment of FIG. 7 is somewhat similar to that of FIG. 1 in that a dilute electrolyte is sprayed as indicated at reference numeral 202 through apertures 204 in the ceramic block 206. Unlike the arrangements of FIG. 1, however, in FIG. 7 a ring-shaped ceramic member 208 is provided with apertures 210 for spraying dilute electrolyte upward in a somewhat converging conical spray 212, toward the downwardly directed spray 202. The center of the lower ceramic member 208 is open so that the ionized gases from chamber 214 may expand downwardly into zone 216 where appropriate heat exchangers are provided, of the types shown to the right in each of FIGS. 1 and 2.

Massive insulated input conductors 218 and 220 supply power to the electrodes 222 and 224, respectively, with the electrode spacing being in the order of 48 inches, and the power being supplied at a voltage in the order of 2500 volts.

Relatively concentrated electrolyte is supplied to the unit of FIG. 7 through conduits 218 and 222, and dilution is accomplished by water supplied through pipes 224 and 226 so that good mixing is accomplished prior to spraying from the apertured ceramic members 206 and 208, respectively.

The result is a vigorous electric arc discharge in the center of the chamber 214, with the resultant ionization of the sprayed water, and a downward flow of the stream of ionized gases into chamber 216 as indicated by the arrows toward the lower zones in

FIG. 7. cooling water is supplied to the cooling jacket 232 from input conduit 234. The cooling water flows upward through the jacket 232 and enters the very thin peripheral opening 236 and is permitted to flow down the inner surface of the side walls 238 of the chamber 214. The water serves to protect and cool the walls 238, and the water is converted to steam and then ionized as it is exposed to the intense heat and the ionized gases resulting from the arc discharge at the center of chamber 214. Instead of flowing down the side walls as discussed above, the slot 236 may be made very narrow, and direct a spray "curtain" of water adjacent the side walls 238 of the enclosing chamber.

With regard to certain other aspects of the apparatus disclosed hereinabove, the matter of materials which may be used deserves at least passing consideration. The principal materials which are used include a machinable electrically insulating ceramic material, and stainless steel. The machinable ceramic material, which may be "Marcor", available from Corning Glass Co., is employed adjacent the electrodes, to prevent an electrical discharge across to the walls of the chambers, and is used for example, for parts 206, 208, and 238 in FIG. 7. The main portion of the units in each case, away from the arc discharge electrodes, is formed of stainless steel; and the heat exchange coils, such as the coils 56 in FIG. 1 and 138 and 150 in FIGS. 2

and 5, for example, are formed of stainless steel tubing. The units may be enclosed in ceramic wool insulation, for example. The alumina type known as KaoWool, available from Babcock and Wilcox, is indicated at 78 in FIG. 1. The water supplied to the units is insulating, pure, distilled water, for control purposes and to avoid flow of electricity. Instead of using a strong electrolyte tank, and then diluting it, fine powder dispensers for the electrolyte may be provided adjacent the point of use or of spraying of the electrolyte and water solution to provide closer electric current flow control. In the foregoing description, it was mentioned that, with an electrode spacing in the order of 48 inches, a voltage in the order of 2500 volts could be used. With lesser electrode spacings, for example about seven inches, a voltage of about 200 to 240 volts may be employed, with the power being in the order of 200 kilowatts, in order to implement a smaller unit.

Now that the detailed description of the present invention has been completed, reference is made to certain prior art articles relating to electric art plasma technology. These include an article entitled "Production Experience with Plasma Technology in Metallurgical Processing", by Hans G. Herlitz, reprinted from "Iron and Steel Engineer" August 1985; and Technical Report, dated January 1984, entitled "SKF Steel's Plasma Technology" by Hans G. Herlitz. These publications describe the application of electric are plasma technology to steel industry fields of interest.

In conclusion, the accompanying drawings and the foregoing detailed description relate to illustrative embodiments of the invention. It is to be understood, however, that the invention is not limited to the precise structure as shown in the drawings and as described in detail hereinabove. Thus, by way of example, and not of limitation, the formation of steam using electric arc plasma generation, can take somewhat different configuration. Thus, the electrode configuration may be in the form of concentric rings, instead of the linear electrodes as shown in the two embodiments of the invention, and the water jackets and cooling coils from which super-heated steam is obtained may be arranged in different configurations both as to their geometry, and to their flow paths. Further, the output from the main arc plasma envelope need not be directed to the steam expansion chamber to which the super-heated water is applied but may be used directly in cases where such direct use of the steam is advantageous or desirable. It is also to be understood that additional valving may be employed where desired, in order to control the flow of spray water into the electrode area in the case of FIG. 1, and into the electric arc plasma zone in the case of the embodiments of both FIGS. 1 and 2. In addition, the unit of Fig. 2 may be provided with selective sump or drain arrangements, to insure that there is not an undesirable collection of water in zone 112 at start-up. Accordingly, the present invention is not limited to that as shown and described in detail hereinabove.

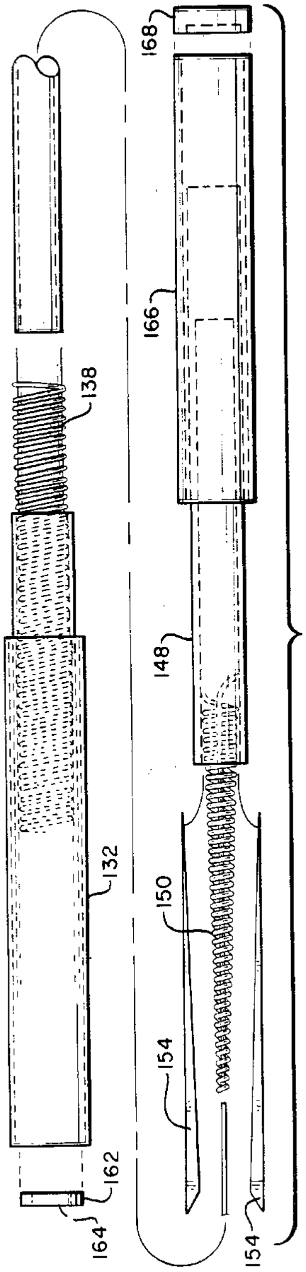
168
166
138
148
132
150
154
162
164
154

FIG. 5

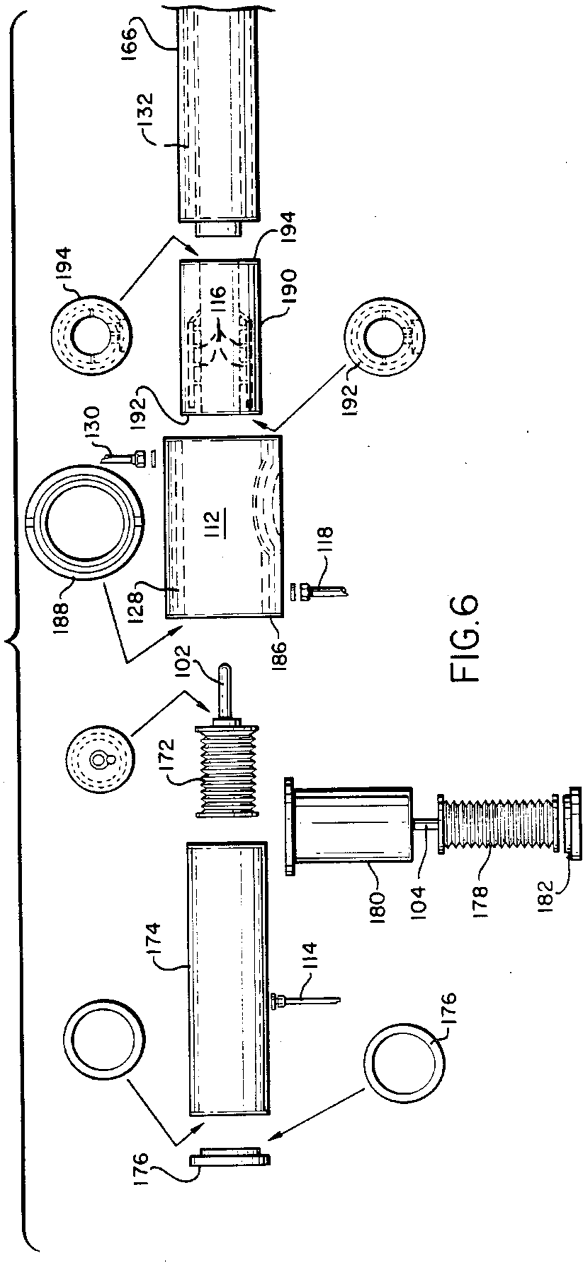
166
132
194
194
116
190
192
192
130
112
118
128
188
186
102
172
180
104
178
182
174
114
176
176

FIG. 6

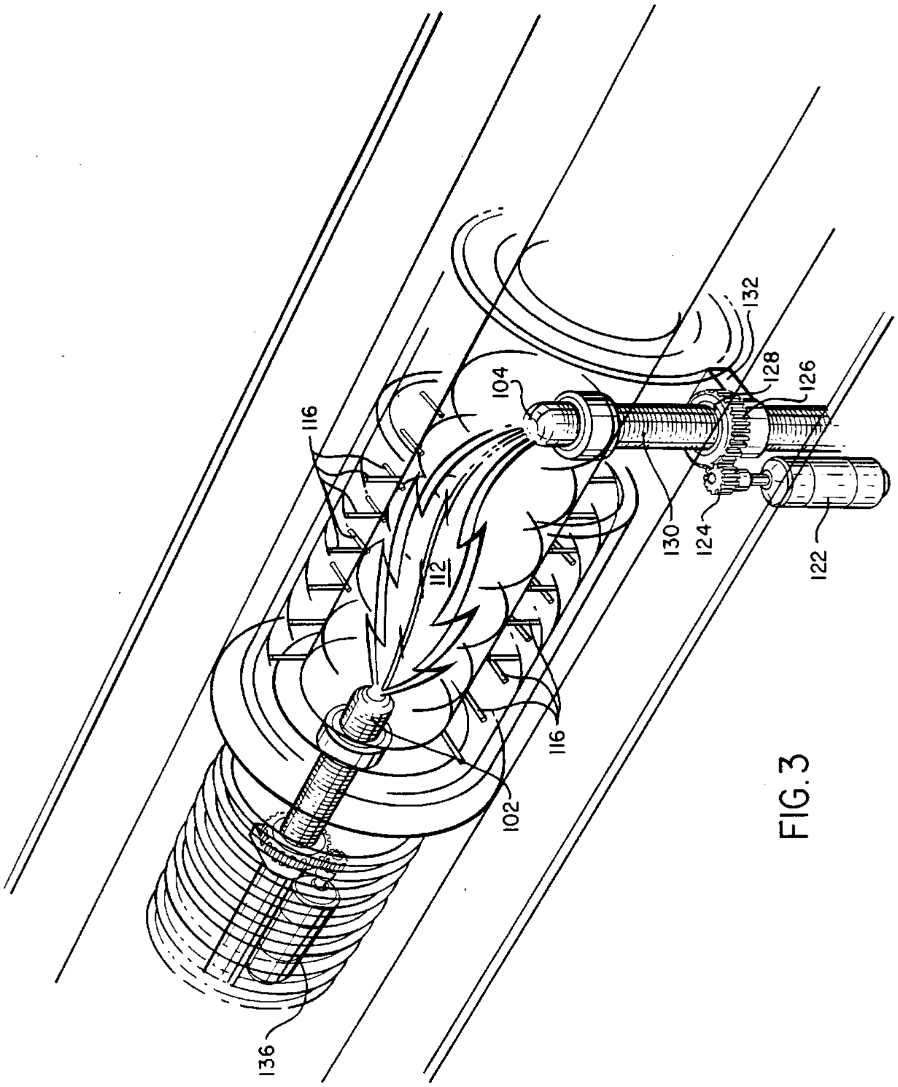

FIG. 3

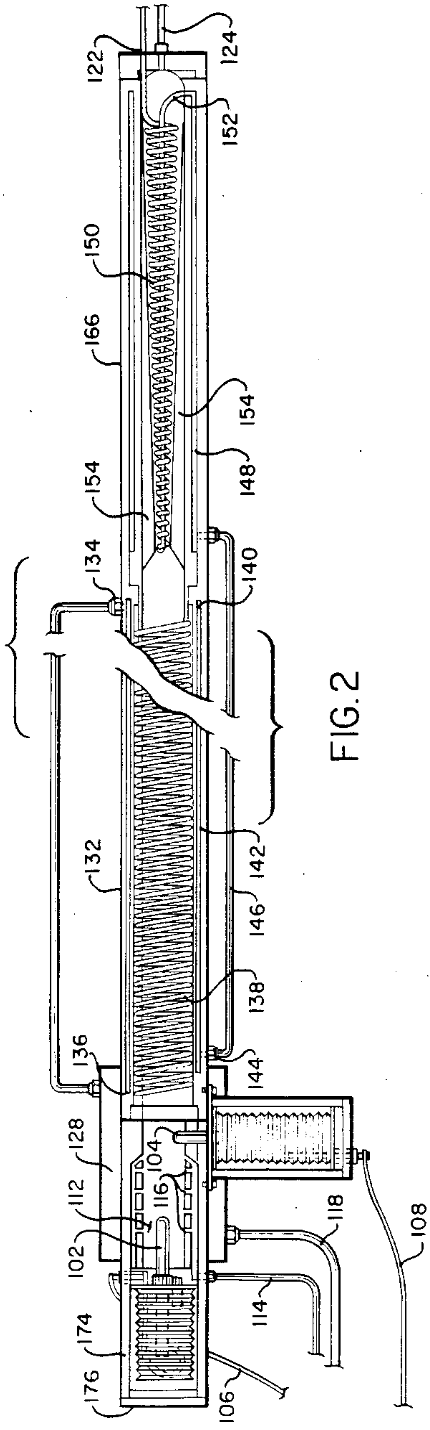
122
124
152
150
166
154
154
148
134
140
142
132
146
138
136
144
128
104
116
112
118
102
108
114
174
176
106

FIG. 2

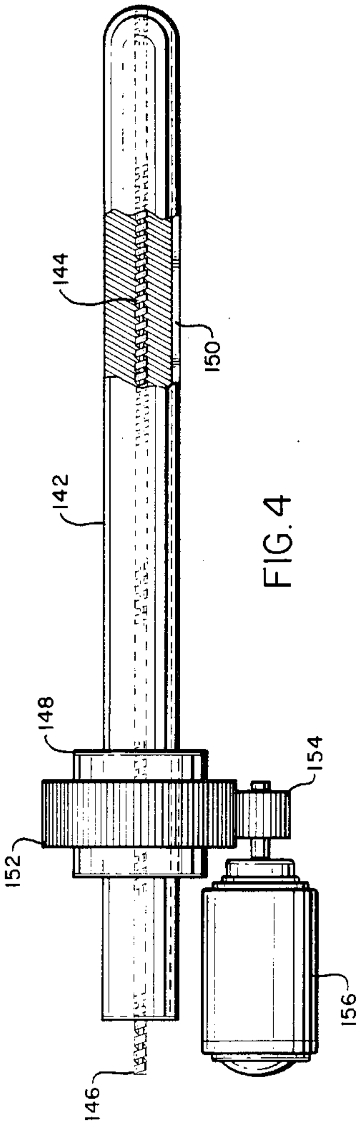
144
150
142
148
154
152
156
146

FIG. 4

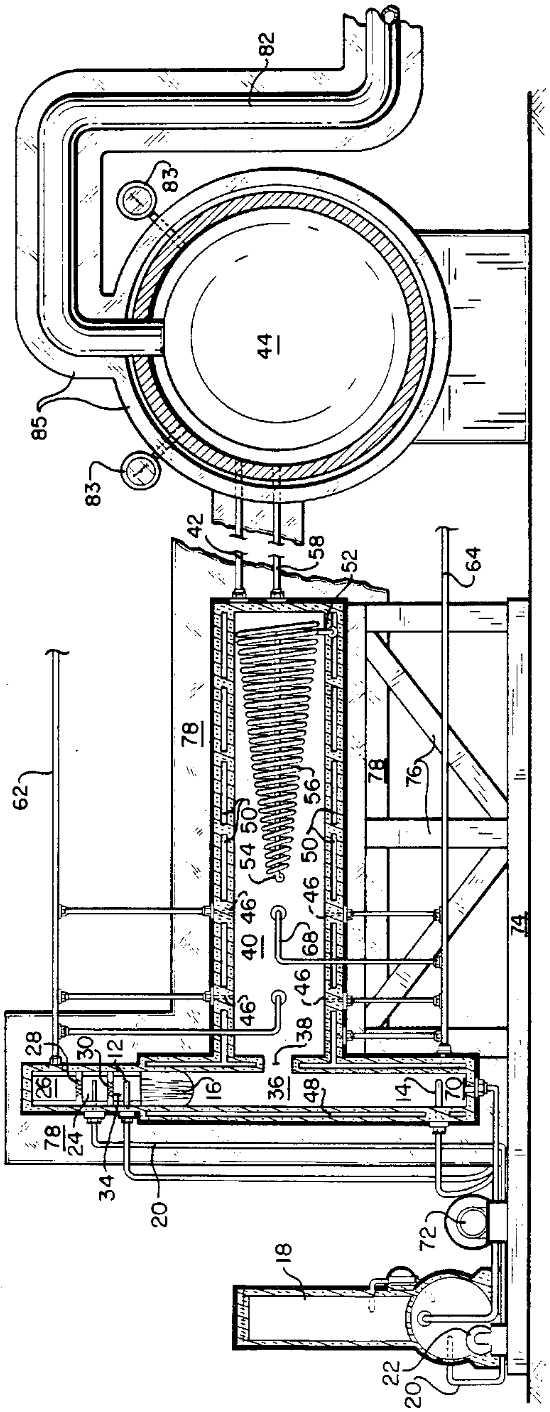
82
83
44
85
83
42
58
52
64
62
78
78
76
56
50
54
50
46
46
40
68
46
46
38
28
30
12
16
36
48
14
70
26
78
24
34
20
74
72
18
22
20

FIG. 1

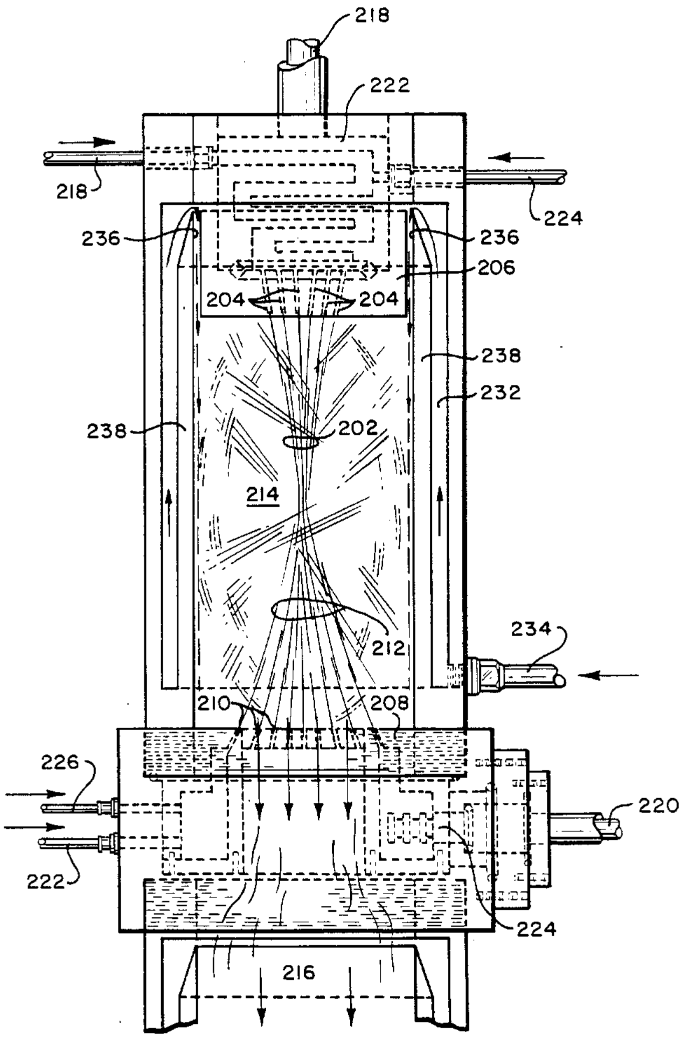
218
222
218
224
236
236
206
204
204
238
232
238
202
214
234
212
210
208
226
220
222
224
216

FIG. 7

4.0.2.4. Energy conservation technique; Leach; US # 4,272,345; June 9, 1981

Pebble Beach, CA

Waste heat which would otherwise be lost up a stack or chimney may be employed to generate hydrogen or hydrogen peroxide through the use of special equipment including a heat exchange structure associated with the stack or chimney. Through one heat exchange structure, water is formed into steam. Then, in one or more additional heat exchangers, the steam is converted into hydrogen gas and/or hydrogen peroxide. The active material in the additional heat exchanger arrangements may include both (1) a metal oxide, such as manganese oxide, which successively sequesters oxygen from water vapor, and then as the pressure is reduced in later portion of the cycle, releases the captured oxygen; and may also or alternatively include (2) host and sensitizer material for shifting the output radiation into one of the absorption bands for water vapor. Additionally, through the very high intensity infrared radiation which is applied in a concentrated manner to the steam, further dissociation of the water vapor by the phenomenon of multiphoton absorption, is obtained; and suitable resonant cavity and high pass filtering film arrangements may be employed to shift the frequency of radiation applied to dissociate the water vapor into the ultraviolet frequency range.

RELATED PATENT APPLICATION AND PATENTS

This patent application is a continuation-in-part of my U.S. patent application Ser. No. 065,188, filed Aug. 9, 1979; the said patent application Ser. No. 065,188 being a continuation-in-part of U.S. patent application Ser. No. 879,226, filed Feb. 21, 1978, now U.S. Pat. No. 4,193,879; which is in turn a continuation-in-part of Ser. No. 790,320, Apr. 25, 1977, now U.S. Pat. No. 4,113,589, and Ser. No. 834,682, filed Sept. 19, 1977, now U.S. Pat. No. 4,148,701.

BACKGROUND OF THE INVENTION

This invention relates to arrangements for generating hydrogen and/or hydrogen peroxide from waste heat, such as that passing up an industrial stack or chimney. A recent book which has generated much interest in Washington, DC and throughout the country is entitled, "Energy Future", and was edited by Robert Stobaugh and Daniel Yergin. This authoritative book includes the following quotations: "There is a source of energy that produces no radioactive waste, nothing in the way of petrodollars, and very little pollution. Moreover, the source can provide the energy that conventional sources may not be able to furnish. To be semantically accurate, the source should be called conservation energy to remind us of the reality--that conservation is no less an energy alternative than oil, gas, coal or nuclear. Indeed, in the near term, conservation could do more than any of the conventional sources to help the country deal with the energy problem it has." "As two prominent analysts, Lee Schipper and Joel Dormstadter, have expressed it: `The most impelling factor in encouraging conservation action is the cost of not conserving`." "It is well known that vast amounts of energy are radiated up industrial stacks into the air--or into lakes, rivers or oceans. This is called waste heat/energy." "At a typical electric utility generating plant, up to two thirds of the fuel's potential energy is lost as discharged waste heat. Meanwhile, industrial waste heat has been estimated at 20 percent of total national energy consumption."In the same book it is stated that the energy consumption in the United States in 1977 when converted into equivalent barrels of oil per day, is equal to approximately 36.7 millions of barrels per day, with each one million barrels of oil per day being equivalent to approximately 2.12.times.10.sup.15 BTUs per year. Using the figure of industrial waste heat being in the order of 20 percent of the total national energy consumption, this means that we are wasting in this one area along, approximately 7 or 8 million barrels of oil per day equivalent, and this corresponds to about 15.times.10.sup.15 BTUs per year. Assuming a conservative cost of about $2.00 per million BTUs, the annual loss is more than $3.times.10.sup.10 or over 30 billion dollars for the year 1977. Although various proposals have been made for utilizing the waste heat lost going up the stacks of chimneys, up to the present time commercial efforts to recover this waste heat and to convert it efficiently and economically into useful forms of energy have not justified the investment. Accordingly, a principal object of the present invention is to provide an economical manner of directly recovering the wasted heat and providing the recovered energy in a useful form which may be readily and conveniently employed.

SUMMARY OF THE INVENTION

In accordance with the present invention, apparatus operating on the general principles outlined in my U.S. Pat. Nos. 4,113,589 and 4,148,701 may be employed to utilize waste heat from industrial processes and to directly generate hydrogen gas and/or hydrogen peroxide. More specifically, in accordance with the present invention, heat exchanging arrangements are oupled to a stack or chimney in a streamlined manner to avoid introducing undue back pressure into the stack or chimney; steam is generated from the waste heat; and then the steam is dissociated to form hydrogen gas and hydrogen peroxide. The dissociation step is accomplished by an oxygen sequestering step, and/or by the application of high intensity radiation within the absorption band or bands of water through the use of special host and sensitizer materials which absorb radiation from the walls of the heat exchanger directly or indirectly and re-radiate the desired frequencies at exceedingly high intensities.

In accordance with one aspect of the invention, the heat exchangers may take the form of pipes which extend through the walls of the chimney or stack, in an open configuration to absorb some portion of the waste heat without creating any significant back pressure retarding the flow of gases. A small portion of the available heat absorbed by the heat exchange structure may be used to convert water into steam or water vapor, and the greater portion of the space within the heat exchanger may contain material, such as a suitable metal oxide, and/or host and sensitizer material, for the sequestering and radiation steps mentioned hereinabove. Additional aspects and features of the invention include the following: (1) A metal oxide is selected which will absorb oxygen from water vapor at the ambient temperatures provided by the stack;

(2) Host and sensitizer materials are selected which will absorb energy at the ambient temperature and which will radiate energy within the absorption band or bands of water vapor or other gases to be dissociated. (

3) A series of units may be provided in a single stack operative at progressively lower temperatures so that a larger proportion of the waste heat may be recovered;
(4) Any desired portion of the generated hydrogen and/or hydrogen peroxide may be routed back to the main process or to directly raise the temperature of the heat exchanger containing the metal oxide, so that the hydrogen or hydrogen peroxide may be continuously employed to reduce the total amount of energy input;

(5) The system external to the stack may include a heat exchanger in which the hot hydrogen and/or hydrogen peroxide as it is formed warms the input water which is subsequently converted to steam;

(6) A negative pressure tank is provided to withdraw oxygen either alone or as carbon dioxide, as it is disproportionated from the metal oxide reactant;

(7) Arrangements may be provided for passing carbon monoxide from the waste gases in the stack over the metal oxide to facilitate the disproportionation of the oxygen;

(8) The heat exchange structures within the stack or chimney may be a series of spaced pipes extending generally vertically or in the direction of gas flow to minimize back pressure;

(9) Each unit may include a series of heat exchanging reaction chambers operated sequentially, to continuously generate hydrogen or hydrogen peroxide;

(10) The heat exchange tubes may be coated internally with host and sensitizer material to directly irradiate the steam in a continuous process; and

(11) Suitable resonant cavities and a high pass filtering film may be provided to shift the radiation applied to the water vapor into the ultraviolet spectrum. An important advantage of the present invention is its applicability to existing facilities, as a "technical fix" to significantly increase the efficiency of the many industrial plants which now radiate and waste vast quantities of heat energy. Other objects, features, and advantages will become apparent from a consideration of the following detailed description and from the accompanying drawings.

BRIEF DESCRIPTION OF THE DRAWINGS

FIG. 1 is a diagrammatic showing of an industrial plant including a stack equipped with a series of units coupled to the stack to generate hydrogen from the waste heat;

FIG. 2 is a diagrammatic showing of one illustrative unit for converting waste heat to hydrogen gas and/or hydrogen peroxide;

FIGS. 3 and 4 are side and top views, respectively, of another form of heat exchanger shown mounted in a stack or chimney;

FIG. 5 is a cross sectional view through one of the heat exchanger tubes as shown in FIG. 2, 3 or 4; FIGS. 6 and 7 show an alternative form of heat exchanger which may be employed in place of that shown in FIG. 2 or in FIGS. 3 and 4;

FIGS. 8 and 9 are showings of alternate reaction material arrangements which may be contained in the heat exchanger structures shown in earlier figures of the drawings; FIG. 10 is a cross sectional view of an alternative form of heat exchange pipe and water dissociation arrangement which may be employed in a continuous process using the heat exchange configurational arrangements shown in any of the prior figures of the drawings;

FIGS. 11, 12 and 13 show another alternative continuous flow embodiment of the invention, in which ultraviolet radiation is applied to the water vapor; and FIGS. 14 and 15 are a block diagram and an exemplary installation, respectively, of another embodiment, using several sequentially operated reaction chambers.

DETAILED DESCRIPTION

Referring more particularly to the drawings, FIG. 1 shows an industrial building 12 which is provided with a stack or chimney 14. In the normal course of operation of the industrial facility, substantial heat is lost through the chimney 14 in the form of hot gases which pass up the chimney 14. In accordance with the present invention, a series of waste heat energy recovery units 21 through 24 are provided to convert the waste heat to burnable fuel, such as hydrogen gas or hydrogen peroxide.

FIG. 2 is a detailed showing of one illustrative implementation of one of the units 21 of FIG. 1. The units such as 21 include two principal sets of equipment, one of which is located within the chimney or stack structure 14, and the other being immediately adjacent and external thereto. Within the chimney 14 is an open heat exchanging conduit configuration 28 and a cup-shaped member 30 for absorbing heat or heated gases passing up the stack 14. Steam to be dissociated to form hydrogen gas is supplied to the reaction chamber within tubing 28, through the conduit 32. Gases are withdrawn from the tubing 28 through the conduits 34 and 36. Heat or heated gases picked up by the cup-shaped element 30 are brought out from the stack 14 through conduit 36. The major components external to the stack 14 include a source of input water 42, a heat exchanging tank 44 within which the input water is stored, and through which the output hydrogen and/or hydrogen peroxide passes within the coiled conduit 46, thereby cooling the hydrogen gas and providing initial heating for the water within tank 44. From the tank 44, the water is routed to the steam generation unit 48. Incidentally, the steam generation unit 48 may be implemented by a few turns of metal tubing within the stack 14, rather than by an external unit as shown in FIG. 2. Also shown in FIG. 2 is the vacuum pump 50 and the reduced pressure tank 52. Hydrogen and/or hydrogen peroxide, formed in the reaction conduits 28, are stored in the tank 54. The burner 56 indicates schematically the utilization of the hydrogen gas which has been stored in tank 54. In practice, the gas may be directed back to a furnace or other utilization equipment 60 in FIG. 1, to reduce the input fuel requirements for the industrial facility 12. The process may be carried out cyclically through the use of the valves 62 as shown in FIG. 2. These valves may be either cam actuated, or they may be implemented by electromagnetic valve actuators. In connection with the implementation and operation of the apparatus of FIG. 2, reference is again made to my prior U.S. Pat. Nos. 4,113,589 and 4,148,701, and the contents of these two prior patents are hereby incorporated by reference into the present specification. In this connection, reference is made to FIG. 5 of U.S. Pat. No. 4,113,589 in which cam actuated arrangements for a similar apparatus are disclosed; and to FIG. 7 of U.S. Pat. No. 4,148,701, in which the staggered cyclical operation of a related unit is graphically analyzed. It is noted in passing that the apparatus of U.S. Pat. Nos. 4,113,589 and 4,148,701 were not associated with, and did not involve, the formation of hydrogen from waste industrial heat. The present invention does so relate, and involves the recognition that the heat which would otherwise be lost up an industrial stack or chimney can be reclaimed through the generation of fuel, such as hydrogen or hydrogen peroxide in a simple, convenient and efficient manner. In addition, the present invention involves significantly different structural arrangements and configurations from those shown in the prior patents, and have been designed to implement the waste heat recovery system. Turning for the moment to FIG. 5, this is a cross-sectional view through a pipe 72 of high temperature resistant material which may be employed to implement the conduit 28 as shown in FIG. 2, or similar structures shown in other embodiments of the drawings. Within the conduit 72 is a mass of finely divided material such as manganese oxide 74 and additional material, such as the spherical metal balls 76 and the stainless steel metal turnings 78, which increase the void volume within the conduit 72 and permit freer flow of gas through the conduit 72. The size of the manganese oxide particles may be in the order of one hundredth of an inch in their largest dimension, or about 0.010 inch. Now, when steam is supplied to the conduit 72 and passed over the manganese oxide, with the oxide at an elevated temperature, the manganese oxide is further oxidized to a higher oxidation state, and the oxygen in the water vapor is thereby sequestered. The reaction is substantially as follows, in one of a number of alternative modes: The foregoing reaction occurs at a temperature above atmospheric pressure and this can range from a few pounds per square inch above atmospheric pressure to many atmospheres, depending on the desired output pressure of the hydrogen.

Subsequently, the pressure within the heat exchanger is reduced, to atmospheric pressure or less, preferably in the order of about 1/10th atmospheric pressure, and the oxygen is disproportionated from the manganese oxide and it returns to its lower oxidation state as follows: Incidentally, for the above reactions to go forward in the indicated manner, the temperature of the reactant should be substantially above 535 degrees C., which is the temperature at which MnO.sub.2 will dissociate to Mn.sub.2 O.sub.3. Accordingly, it is desirable to operate at temperatures well above 535 degrees C., and satisfactory sequestering and disproportionating operation has been achieved at temperatures from 600 degrees C. to 950 degrees C., by way of example.

In some cases, it is convenient to facilitate the disproportionation of oxygen from the metal oxide by the reaction set forth in equation (3) set forth below. This may be accomplished when the waste gases passing through the stack of 14 have a high carbon monoxide content. Referring back to FIG. 2 the cup 30 is employed to pick up some of the waste gases containing carbon monoxide from stack 14 for utilization in the reaction set forth at (3) above.

As indicated by Equation (1) and Equations (2) or (3), the process as described hereinabove is implemented in two successive stages, with the first stage involving the dissociation of steam and the second stage involving the disproportionation of oxygen from the metal oxide, such as Mn.sub.2 O.sub.3. This cycling may be accomplished through the use of the valves 62 as shown in FIG. 2. For convenience in following brief description, the valves 62 are referred to by their reference letters A through F. Initially, it will be assumed that the manganese is in its lower oxidation state as Mn.sub.2 O.sub.3, and that steam is to be admitted to the reaction coils 28 containing the manganese oxide. Under these conditions, the valve 62F is open supplying pressure to move the water through the steam generator 48. Output steam from unit 48 passes through the open valve 62D through the T-junction 82 and into the reactant filled coils 28. With valve 62B open and valve 62C closed, the generated hydrogen passes through the T-junction 84, the cooling coil 46, and through valve 62B to the hydrogen storage tank 54.

Subsequently, during the disproportionation of the oxygen from the manganese oxide in accordance with Equation (2) or Equation (3), the valve 62C is open, and 62B is closed, so that the manganese oxide in the higher oxidation state in the heat exchanger 28 is subjected to reduced pressure whereby the oxygen is drawn off. In addition, if desired, with the valve D being closed, waste gas may be drawn through the check valve 88, from cup 30 so that both equation (2) and equation (3) are implemented concurrently.

Incidentally, concerning valve 62A, when it is desired to draw off some hydrogen from the storage tank 52 and burn it at the burner 56, or utilize it elsewhere, the valve 62A is opened.

FIGS. 3 and 4 show an alternative arrangement for implementing the heat exchanger portions, such as the conduit 28 in FIG. 2, and the similar structures in units 21 through 24 of FIG. 1. More specifically, in FIGS. 3 and 4, the chimney or stack 14 includes four two-turn heat exchange conduits 91 through 94 and a fourth two-turn conduit 96 which is of smaller diameter and which serves to generate steam. As in the case of the arrangements shown in FIGS. 1 and 2, the system of FIGS. 3 and 4 includes the stack 14, and also includes a pickup funnel or duct 98 to receive exhaust gases for the implementation of equation (2) and equation (3), as discussed hereinabove.

The system shown in FIGS. 3 and 4 was designed to produce approximately 15 cubic feet of hydrogen gas per minute, or approximately 900 cubic feet per hour, corresponding to 292,500 BTUs per hour. The amount of loosely filled reactant in the four tubes 91 through 94 is approximately 693 cubic inches. Incidentally, as a matter of interest, the weight of reactant is approximately 49 grams per cubic inch. Using a 1 ½ inch diameter tube, between 32 and 33 feet of conduit are required. This means that each of the four tubes is in the order of 8 to 81/2 feet in length. A two-turn coil, with the outer diameter in the order of 20 or 21 inches, and the inner turn in the order of 14 or 15 inches in diameter, gives the approximate length which is required. To avoid undue back pressure within the stack, the coils 91 through 94 may be laterally spaced apart from one another by approximately 2 inches or more.

It may be noted that the axis of the turns is horizontal, and this is preferred rather than having the reactant lying in a conduit which extends generally horizontally. If such latter construction were employed, it would be possible that the reactant would settle to some extent so that the steam or water vapor would by-pass the reactant, thereby possibly avoiding dissociation.

FIGS. 6 and 7 show an alternative arrangement in which a somewhat different configuration of conduits containing reactant is employed. Specifically, in FIGS. 6 and 7 a series of vertically extending pipes are assembled to extend around the inner periphery of a predetermined section of the vertically extending stack 14. As shown in FIGS. 6 and 7, a short section of several pipes or conduits 102 are employed to generate steam, and the major section of the vertically extending assembly of pipes 104 is used in the main reaction. The heat exchange structure 104 may be subdivided into four sections to correspond to the arrangement of FIG. 4, or may be a single longer conduit more similar to that shown in FIG. 2 of the drawings. The heat exchange structure may be secured in position by any suitable means, such as by fasteners 106.

In addition to the formation of hydrogen by the sequestering of oxygen from water vapor, the present invention also contemplates the dissociation of water vapor by irradiation of the water vapor within the absorption bands of water vapor, and also through the phenomenon of multiphoton absorption by the water vapor. With regard to this phase of the invention, attention is directed to my prior U.S. Pat. No. 4,148,701, in which the portion of the specification starting in Column 13 is particularly pertinent. A brief summary of the concepts which are involved will be repeated here.

Initially, it is noted that the theory of MASERS and LASERS form a background for this portion of the specification. The word LASER is an acronym which stands for Light Amplification by the Stimulated Emission of Radiation. The maser/laser type of acronym may also be applied to another system termed "HASER", an acronym for "Heat Amplification by Stimulating Emission of Radiation". As will be developed below, the term "amplification" is not used in the sense of increasing signal strength, but in the sense of amplifying the effectiveness of heat energy.

The Haser application depends not as much on coherence or monochromaticity per se, but rather on the unprecedented energy per unit area. This radiated energy is a by-product of the coherence of the radiation, and can be many orders of magnitude greater in energy than normal incoherent thermal radiation. To understand why this is possible, it is necessary to review briefly a few of the basic differences between the incoherent radiation produced by an ordinary bright source and the coherent light (radiation) produced by a laser or maser.

In a conventional source the atoms of a solid (or a gas) are agitated either thermally or electrically to higher energy states. When these atoms return spontaneously to their lower levels, they radiate some of their excess energy as light. Since each atom behaves indecently at this state, its emission is at a random time and in a random direction with a random polarization.

It follows that the light radiated in a single direction is the complex sum of all the light from the individual atoms. The phases of any two atoms will tend to cancel their radiation in some directions and enhance it in others. The total energy of the source will be on the average be radiated uniformly in all accessible directions, and the amount of energy observed in a given direction will be proportional to the solid angle subtended by the observing device. In the Haser interior the observing device is either a water-vapor molecule (or other feedstock) or another particulate of reactant. The maximum total energy that can be radiated by a given source depends on two factors: the surface area of the source and the maximum temperature to which the source has been heated. Therefore, in practice, the only way to increase the power output from an ordinary source beyond the limitations imposed by the source material is to increase the surface area of the source. Power output, however, is only half the solution. Concentrated power is much more important than power itself. A 40-watt fluorescent lamp, for example, produces more light than a 40-watt incandescent lamp, but the fluorescent lamp is not nearly as effective as the incandescent light source for a spotlight. Now, in a laser or maser, the energy is also emitted when atoms drop from a higher energy level to a lower one; however, in this case the atoms are triggered and emit radiation (to a large percentage) in unison. In the case of the Haser, the atoms are triggered to emit radiation in unison by phonon/photon waves within the unit cavity or cell interor. Enough of the energy previously generated is retained within the mass of particulates to maintain emission in a compatible phase, polarization and direction. This phonon wave interacts with the excited atoms and causes them (to a large degree) to emit their excess energy in phase with the stimulating wave before they have a chance to do it randomly. As a result, the Haser generates a good percentage of its radiated energy so that it travels in synchronism with the standing phonon waves, therefore concentrating the energy emitted as photons. In effect, the radiated photons from the Haser particulates are all relatively concentrated, monochromatic, and therefore, relatively coherent energy sources. This results in an excellent energy density even though the photons are traveling in practically an infinite number of directions, due to the fact that the particulate sources number in hundreds of millions. The photons moving from particulate to particulate impact and are absorbed by other particulates. Then this STORAGE, BUILDUP, AND RELEASE of the "phase and amplitude of radiated energy", combined with the fine particulate geometry of the Haser power (energy) source, which provides surface area to emit a concentrated array of photons, allows a "maximum efficiency utilization" of the radiated energy within the Haser cavity. The act of controlling the spectral emissions to most effectively dissociate (for example) water vapor, by sensitizing the host compound properly is another very important point. The monochromatic waves may become distorted in passing through substances, so that harmonic waves are generated at two or more times their original frequency.

Infrared wavelengths may be converted into visible light into ultraviolet waves. This new system utilizes fine (small) particulates of solid comprised of oxides which are predetermined by design and within which some host atoms are replaced by other frequency sensitive atoms also predetermined by design, which provides stimulated absorption and emission at predetermined wavelengths.

The waste heat passing up the stack heats the conduits to thereby provide the original energy to liberate a massive volume of photons at the frequency range which will activate the sensitive atoms included in the host compound; the fine multi-faceted particulates absorb the photons which normally proceed as phonons through the particulate to generate and provide large numbers of cavity resonances which stimulates emission with each internal excursion; therefore, again, the gain by this regenerative amplifier when driven by the thermal noise fluctuations from the cavity walls, can be significant. In the case of the HASER, the principle emissions of radiation designed and produced to dissociate the chemical product may be emitted from coatings on the material and walls around the open spaces or cavities in the conduits in FIGS. 5, 8, and 9 for example. As the reactive mass reaches temperature levels which excite the molecules and atoms to a radiating level of energy, phonons and photons evolve which distribute the thermal energy within the mass. Incidentally, relative to the use of the terms "photon" and "phonon", when a phonon traveling through space impinges on a solid, the resultant wave in the solid is termed a "phonon". The ability of `atoms` to store energy has to do with the electrons within the individual atoms. The electrons exist as a cloud of negative charge around the positively charged nucleus. Each election occupies a state of energy and angular momentum that cannot be occupied by any other election. Therefore, the electrons tend to fill stable shells surrounding the nucleus. The electrons of the outermost shell are the ones most easily affected by outside forces because of their accessibility. These outer electrons can be moved to higher energy states, but they always tends to return to their lowest energy state. Electrons at certain levels decay (fall to a lower state) more easily than electrons at other levels. Each excited electronic state of the atom has a characteristic lifetime that indicates the average time it takes an electron to fall to a lower level and therefore radiate a photon. Most excited states have lifetimes of about 10.sup.-8 second. There are some excited states or levels in all atoms in which the electron cannot decay easily by giving up a photon. Such atoms must therefore wait for other means of giving up their energy, such as colliding with other atoms or with the walls of the system. Electrons in this state of energy tend to stay there for relatively long periods of time (0.001 second or more), and are referred to as being in metastable states. This is an important part of the storing of energy, which can then be retrieved in the excitation process by stimulation.

The normal radiative decay from a higher electronic state to a lower one is termed spontaneous emission. As discussed earlier, processes exist that can force an atomic electron to a higher state or stimulate it to jump to a lower state. An example of forcing, as discussed earlier, is provided when a photon collides with an atom and excites the outer electron to a higher level, which can happen when the energy or wavelength of the photon corresponds exactly to the difference in energy between the state the electron is in and some higher possible state. This process is known as absorption because the photon (energy) is actually absorbed by the atom and all the photon's energy goes into raising the electron to a higher state. Similarly, as discussed earlier, the stimulated electron can move to a lower level, provided that such a level exists and that the difference between the two levels corresponds to the energy of the incoming photon exactly. The energy given up by the electron in jumping to a lower state goes into creating an additional photon with the same characteristics as the colliding photon. A large number of atoms can provide an increase in the radiated energy at the desired frequency or energy level, if the population of electrons in the excited states of the atoms is suitably arranged. Consider two excited levels of a system of identical atoms with the electrons divided between the upper and lower levels. If a radiated photon having a wavelength corresponding to the difference in energy between the two levels is allowed to pass through the system medium, it will be amplified if there are more atoms with electrons in the upper state and absorbed if there are more atoms with electrons in the lower state. The condition of having more atoms in the upper state is called a "population inversion" (because it goes against the normal processes of nature, which tend to keep more electrons at lower energies than at higher energies). The search for new Haser "systems" is therefore not easy, because one is working against the natural tendencies of the electrons. Another important consideration is the actual `lifetimes` of the ion energy levels of the impurity atoms involved in the population inversion. The upper level of a two-level system with a population inversion radiates energy corresponding exactly to the difference between the two levels. The electrons that have thus yielded energy by radiation, end up at the lower level. If they remained there, the situation would result wherein there would be more atoms at the lower level than at the upper level, and as discussed earlier, there would be absorption instead of gain. For continuous operation, one must find impurity atoms with combinations of levels such that the lower level has a short lifetime and the upper level is preferentially populated. This necessity rules out the ion ground state as a possible Haser level, since all ion ground states are metastable. The pair (or more) of ion energy levels which will provide amplification must be energetically above the ground state but still below the metastable states. Although the original gas laser utilized electrical excitation of electronic transitions, later versions used vibrational transitions in molecules such as carbon dioxide, and the excitation mechanism may involve electrical or chemical excitation, or the burning of fuel. In the chemical laser, atomic species such as hydrogen and fluorine can be reacted to produce molecules in an excited vibrational state which in turn yields amplification or oscillation. An entirely new excitation process was announced by Garry in 1970. In this, the gas dynamic laser, an appropriate fuel is burned to produce carbon dioxide and nitrogen at high temperature and pressure. When released through a nozzle into the optical resonator region, the gas cools rapidly in terms of its kinetic or translational energy, but the population of the vibrational energy levels of the carbon dioxide molecules becomes inverted since the lower level of the laser transition relaxes more rapidly. In addition, the vibrationally excited nitrogen molecules are in near resonance with the upper laser state of the carbon dioxide and transfer energy with high efficiency to maintain the inversion. This type of `laser` has produced continuous powers as high as 60 Kw.

The HASER phenomenon as utilized in the present invention, actually uses a thermochemical excitation mechanism. The energy from waste heat prepares the reactant material within the reaction chamber by bringing the material to photon emitting temperatures.

With reference to FIG. 5, suitable host and sensitizer material to be identified below, may be coated on the inner wall of conduit 72 and on the inert spacer elements 76 and 78, to thereby radiate into the adjacent spaces or cavities. Similarly, in the fragmentary views of FIGS. 8 and 9, the hollow metal screen cells 112 (FIG. 8) and the hollow ceramic tubes 114 (FIG. 9) in the conduits 72, are surrounded by metal oxide 116, and the entire mass is heated to elevated temperatures through the walls 72. Included in the structure of the cells 112 (or coated on them), and included in the ceramic tubes 114 is the host and sensitizer material, tailored to absorb input heat energy and to radiate energy at the desired output frequency within the absorption bands of the water vapor. When water vapor is introduced into the arrangements of FIGS. 1 and 8, for example, the excited billions of photons emitted and traveling between particulates, strike the sensitized "Cavities" with a barrage of photons designed to provide frequency, amplitude, and steric factor impact adequate to dissociate the H.sub.2 O molecules. On dissociation, the 2H.sub.2, and O.sub.2 molecules are vibrating at very high temperatures and pressures which are compatible with recombining these molecules through the "activated complex" mechanism into their (high temperature) preferential H.sub.2 O.sub.2 +H.sub.2 molecules, which incidentally evolves more than 33 KCal/mole heat energy. As the steam enters and traverses the cavity, an amount of the steam (depending upon the design of the contents of the reaction chamber and the relative amount of reactant, manganese oxide or other similar metal oxide, and the host/sensitizer material), combines with the reactant, which raises the oxidation level through the process of oxidation; and this of course, evolves heat energy (because this is an exothemic reaction), which, broadcasts more photons of energy throughout the cavity interior, to react with the sensitizers and activators; and this in turn creates massive amounts of new photons of energy to dissociate the water vapor and to help maintain the reaction temperatures within the host materials. Referring again to FIG. 8, the cavities 112 can be fabricated of very fine mesh woven wire, which is cut into small sections, stamped, folded, and the outer edges of the wire mesh are secured together to form a hollow cell. The wire, of a diameter approximately equal to 0.002 inch, is made up of the elements, compounds, and a metal carrier (inert to the process), and is initially woven and formed into the cells as described above. It is then transformed into the desired host and sensitizer materials through oxidation in an atmospherically controlled furnance or kiln.

Instead of the wire mesh cells 112 as shown in FIG. 8, the preferred form of Haser cavity is shown in FIG. 9 in which a large number of ceramic tubes 114 are present. These tubes are preferably extruded from mullite, which is a common clay having the approximate chemical structure of 2Al.sub.2 O.sub.3.SiO.sub.2 with a range to 3Al.sub.2 O.sub.3.2SiO.sub.2. Suitable quantities of host and sensitizer materials, as described below, are added to, and thoroughly mixed with the mullite prior to extrusion. Subsequent to extrusion the tubes are fired in a suitable kiln or furnance. The tubes may suitably have a diameter of about 1/4 inch or 1/2 and be from 1/2 inch to 4 inches in length. The sidewalls may be suitable from 1/32 to 1/16 of an inch in thickness, but none of the foregoing dimensions are critical. After firing, the tubes 114 may be provided with filters in both ends. The filters may be of any suitable structure, for example, several layers of metal gauze, to prevent the intrusion of the reactant 116 which may, for example, be manganese oxide. In practice the ceramic tubes 114 may be initially placed in one of the heat exchanges conduits; and then powdered metallic manganese or manganese oxide may be poured in and the entire unit vibrated and rotated until the manganese oxide 116 as shown in FIG. 9 fills all the space around the ceramic tubes 352. With this arrangement, of course, the water vapor is present within all of the ceramic tubes 114 and radiation from the host/sensitizer combination forming part of the ceramic walls 352 radiates intense coherent energy in one or more of the absorption bands of water vapor; and this intense radiation serves to dissociate the hydrogen and oxygen atoms making up the water vapor molecule.

In the tabulation, which is set forth below, suitable host materials and sensitizers for applying radiation to water vapor will be set forth. In this tabulation the chemical symbols for the elements will be employed, and the host materials will be listed first followed by the sensitizer material. In each case the absorption band for the host material will initially be given and then the emission wavelength of the sensitizer will be set forth.

(a) Ca WO.sub.4 : Nd.sup.3+ Where Absorption = 0.74 microns-0.76 microns Ca, (Calcium) Emission = 1.065 microns W, (Tungsten) Nd, (Neodymium) (b) Ca WO.sub.4 : Nd.sup.3+ Absorption = 0.87 microns-0.89 microns (Same) Emission = 1.3372 microns (c) Y.sub.3 Al.sub.5 O.sub.12 : Er.sup.3+ Where Absorption = 0.46 microns-0.47 microns Y, (Yttrium) Emission = 1.6602 microns Al, (Aluminum) Er, (Erbium) (d) Y.sub.3 Al.sub.5 O.sub.12 : Er.sup.3+ Absorption = 0.52 microns-0.54 microns (Same) (e) CaF.sub.2 : U.sup.3+ Where Absorption = 1.2 microns-1.3 microns Ca, (Calcium) Emission = 2.5111 microns-2.613 F, (Fluorine) microns U, (Uranium)

In the foregoing tabulation it may be noted that there are only three separate combinations of host and sensitizer materials which are being employed. More specifically, the combination of calcium tungstate and neodymium produce output radiations both at 1.065 microns and also at 1.3372 microns as set forth in examples (a) and (b). It may be noted that the absorption wavelengths for the two output emissions differ correspondingly. The combination tabulated in examples (c) and (d) set forth above include yttrium aluminum oxide as the host material and erbium as the sensitizer. In this case, the emitted radiation for both (c) and (d) is at 1.6602 microns; however, the absorption for the two examples is at different frequencies. The final example (e) using calcium floride as the host material and uranium-3 as the sensitizer was mentioned above absorbs at 1.2 to 1.3 microns, and radiates at 2.5111 and at 2.613 microns.

With regard to the matching of the emitted radiation from the sensitizers with the absorption bands for water vapor as a feedstock, reference is made to U.S. Pat. No. 4,148,701 in which a full discussion is presented. Three additional host-sensitizer combinations which are applicable to water vapor are yttrium aluminum oxide with holmium; calcium tungstate with erbium; and calcium fluoride with dysprosium. These are tabulated below with their absorption and emission wavelengths in microns (f) Y.sub.3 Al.sub.5 O.sub. 12 : Ho.sup.3+ Absorption: 0.44-0.46 microns (1) 1.13-1.17 microns (2) 1.88-1.93 microns (3) Emission: 2.0975 microns (1) 2.0914 microns (2) 2.1223 microns (3) (g) CaWO.sub.4 : Er.sup.3+ Absorption: 0.2-0.28 microns (1) 0.46-0.47 microns (2) 0.52-0.54 microns (3) Emission: 1.612 microns (1), (2), (3) (h) CaF.sub.2 : Dy.sup.2+ Absorption: 0.8-1.0 microns Emission: 2.36 microns

Incidentally, the visible spectrum ranges from about: 0.400 microns to about 0.700 microns (4,000 Angstrom units to 7,000 Angstrom units) so the 0.46 to 0,47 micron absorption region is in the blue band of the visible spectrum, and most of the emission wavelengths are in the infrared band.

With regard to the relative quantities of the host and sensitizer material in the mullite, the quantity of host material should be approximately 25 to 1,000 times greater than the amount of associated sensitizer material. A ratio of approximately 0.5% of sensitizer of the amount of host material is the general order of magnitude which should be employed. In addition, the quantity of each particular category of host and sensitizer material such as those set forth in the tabulation of combinations (a) through (h) set forth above, should be proportioned to the absorption bands of the feedback which is being irradiated. Thus, in the particular example under consideration, where the host/sensitizer combination (e) using calcium floride and uranium-3, is matched to a broad absorption band of water vapor, a larger quantity of this host/sensitizer combination should be employed as compared with combination (a),(b) and combination (c), (d). Thus, in the making of the ceramic tubes, the material which is being prepared might include approximately 88% by weight of mullite, 8% by weight of the host/sensitizer combination (e), and 2% by weight of each host/sensitizer combinations (a), (b) and (c), (d). Similarly, in the event that the wire mesh is employed, the host sensitizer/sensitizer combinations may be added in the same proportions to stainless steel wire and the combination material drawn into wires and formed into mesh. Alternatively, after the preparation of the stainless steel wire cells, mullite together with the host sensitizer combinations could be applied in several bands in the plastic state around the stainless steel wire mesh cells, and then fired, to produce the desired result. This result, as mentioned above, involves the provision of spaces throughout a body of material constituting a heat reservoir, and locating host/sensitizer combinations around the boundaries of these spaces or voids in the material. The chemical formula for mullite was given above, and it is again noted that mullite includes aluminum oxide AL.sub.2 O.sub.3 and silicon dioxide SiO.sub.2 in certain proportions noted above. In order to enhance the "HASER" action and increase the energization of the host/sensitizer combinations (a) through (e) set forth above, a material such as chromium, which acts as a sensitizer in cooperation with the aluminum oxide in mullite which acts as the host material, may be added. The chromium-aluminum oxide, sensitizer-host combination produces strong output radiation at a number of wavelengths, including output radiation centered ar 0.6934 microns, when the AL.sub.2 O.sub.3 is absorbing energy at 0.5 microns. The radiation centered at 0.6934 is broadened at the high temperature operating conditions so that the radiation extends from 0.6 or 0.65 to 0.75 or 0.8 microns, thus providing supplemental input energy to example (a) set forth hereinabove, which involves absorption at about 0.74 to 0.76 microns. The AL.sub.2 O.sub.3 /Cr combination may also directly apply energy to the feedback when the output radiation is of the proper frequency and may also pump other host/sensitizer combinations. When chromium is used it will be present in quantities in the order of five percent by weight or less of the mullite employed as the basic material of the tubes 114 shown in FIG. 9. The primary requirements for potential solid-state Maser/Haser materials are, first, that the composition should fluoresce with a suitably high intensity at elevated temperatures by means of thermal energy alone and, second, that the matrix should be transparent or has no absorption transition at the operation frequency; it should also be chemically stable and have no caustic characteristic. Preferably, the terminal level of the Haser transition of the active ion should be far enough above the ground state so that three or four-level operation is possible and at elevated temperatures. The lifetime of the metastable level from which the Haser transition orginates should be, insofar as possible, equal to the lifetime for spontaneous emission with no constraints imposed by competitive dissipation to the matrix. In

four-level operation the lifetime of the terminal of the transition must be smaller than that of the metastable level; otherwise, a suitable excess populetion in the upper level cannot be maintained.
This condition is generally obtained when the terminal level lies in the phonon absorption region, preferably between 6,000 and 19,000 cm sup.-1. In addition, it is helpful for the excited active ion to be unable to absorb photons corresponding in energy to the Haser transition. Where such absorption into a higher level or band is possible, the photon/phonon flux in the particulate cavity is reduced and the metastable level depleted. that there will not be a multiplicity of spectra. When these ions are in completely unique sites, the emissions spectrum has the minimum detail and line width consistent with the site symmetry, the crystal field, and the active-ion concentration. In general, the higher the site symmetry the more degenerate the electronic state of the active ion. Therefore, fewer distinct transitions should be observed in fluorescence and, on the average, each emission transition should fluoresce a greater portion of the absorbed energy. However, there are also fewer distinct absorption transitions, and certain emission transitions may be favored in a low-symmetry environment. As long as the emission transitions are few in number, the low symmetry environment may prove to be advantageous by virtue of a broader absorption coverage.

Different classes of active ions seldom find optimum environments in the same host structure. Different activator ions are best accommodated in oxides or fluorides, where the cations of the matrix are approximately equal in size to the activator. AL.sub.2 O.sub.3, MgO, MgFL.sub.2, and ZnF.sub.2 are typical matrices for transitional ions, CaF.sub.2 is particularly useful for divalent rare-earth ions, and CaWO.sub.4, LaF.sub.3, and Y.sub.2 O.sub.3 are best suited for trivalent rare-earth ions for lasers. Y.sub.3 AL.sub.5 O.sub.12 can readily accommodate both trivalent rare-earth ions and trivalent 3d transitional-metal ions. Certain crystals have conveniently disposed matrix absorption bands and these can be used to absorb pumped radiation over a broad spectrum. Other factors to be considered in selecting suitable host and sensitizer materials are set forth in my prior U.S. Pat. No. 4,148,701, mentioned above. An electromatic radiation, (such as radiowave, light, and X-ray) can be characterized by its particular wavelength, LAMBDA, (measured in cm or A), or by its wave number, NU, (the reciprocal of the wavelength), .nu.=a/.lambda., commonly expressed in reciprocal centimeters, cm.sup.-.

ach unit of radiation (a photon) corresponds to a quantum of radiant energy, E, which is directly proportional to a wave number. Since chemical calculations are founded on a mole basis, in discussing the relationship between radiant energy and chemical processes (responsive activators and hosts) it is convenient to express radiant energy in kcal/mole of photons. We can do with this accepted relationship; the radiant energy in 1 mole of photons, with=350 cm.sup.-1, is equal to 1 kcal. Therefore, we can obtain the energy (expressed in kcal/mole) for photons of a given number simply by multiplying the value of .nu. expressed in cm.sup.31 1 by the conversion factor: ##EQU1##

For example, the energy of light photons with .nu.=20,000 cm.sup.-1 is: ##EQU2## and the energy of a single photon of .nu.=20,000 cm.sup.-1 is: ##EQU3## The wave number, .nu. and the energy, of electromagnetic radiations varies within an extremely wide range .nu.=10.sup.14 cm for the .gamma.-rays emitted in nuclear reactions to .nu.=10.sup.-6 cm for radiowaves. In between these two extremes, there is a continuum of radiations of intermediate wave numbers--the "visible region", which extends approximately from 27,000 cm.sup.-1 to 13,500 cm.sup.-1.

In general, when white light strikes a substance, part of the light is absorbed and part is transmitted (if the substance is transparent) or part is reflected (if the substance is opaque). A substance may absorb preferentially the light photons of one (or more) regions of the spectrum, so that the transmitted light or the reflected light is relatively richer in the radiation of the remaining regions.
The combined effect of these remaining radiations is observed as a particular color (when it is in the visible spectrum). For example, a substance that, when exposed to white light, absorbs almost all photons in the entire yellow--to violet region (say from 17,000 to 27,000 cm.sup.-1) will "appear red", because only the radiations in the red region of the spectrum (13,500 to about 17,000 cm.sup.-1), which are not absorbed, remain to be observed. Similarly, a substance that "appears yellow" absorbs photons of both the green-to-violet region (from 19,000 cm. sup.-1 to 27,000 cm.sup.1) and the red region (from 13,500 to 16,000 cm.sup.-1) of the visible spectrum.

Since light (radiation) is energy, the absorption of radiation is absorption of energy; it is well known, that, if a substance absorbs light, the corresponding absorbed energy may be used to promote certain atoms, ions, or molecules of a substance from "ground-state" to an "excited state". For example, an atom, ion, or molecule which absorbs a photon of a given wave length takes on a `quantun` of energy that may serve to promote one electron from a lower energy orbital to a higher (available) energy orbital. In general, different electronic transitions involve the absorption of different quanta of energy.

SPECIFIC EXAMPLES

Some underlying principles involved in the selection of Haser systems have been set out hereinabove and a preferred embodiment has been described which involves water vapor as a feedstock and the generation of hydrogen and/or hydrogen peroxide. It is to be understood that the Haser concept is not limited to the specific embodiment described herein but has more general applicability in the conversion of broadspectrum heat energy or radiation to particular frequencies which lie within the absorption band or bands of any selected feedstock. Further, the feedstock may be gaseous or liquid or even a slurry.

In the following examples, a number of reactions are set forth and these are followed by an identification of a host and sensitizer material which will concentrate the broader spectrum heat energy to one of the absorption bands of the feedstock. Incidentally, in the following examples, in addition to the standard symbols for the elements, the following abbreviations are used: Et for ethyl, C.sub.2 H.sub.5 ; Ph for phenyl, C.sub.6 H.sub.5 ; Pr for propyl, C.sub.3 H.sub.7 ; and Bu for butyl, C.sub.4 H.sub.9. In addition to the host and sensitizers shown in each of the following examples, Al.sub.2 O.sub.3 in mullite and Cr. sup. +3 may advantageously be used (absorption at 0.5 microns; emission centered at 0.6934 microns). As noted above, the mullite may conveniently be employed to physically support the host and sensitizer materials. In the actual examples set forth below, the host and sensitizer materials implement the HASER concept by shifting the radiation, and concentrating it within the absorption bands of the materials being acted upon. However, in most cases no steam is involved and no sequestering of oxygen occurs. Accordingly, with regard to the implementing apparatus, that disclosed below in connection with FIG. 10, for example, is employed within the heat exchanger apparatus.

Incidentally, in FIG. 10 the arrows directed inwardly toward the outer surface of the conduit 122 indicates schematically the waste heat which is continually applied to the conduit, from the gases passing up the stack or chimney. FIGS. 11, 12 and 13 represent yet another embodiment for the possible use of waste heat in forming hydrogen and in other chemical reactions, with the embodiment of FIGS. 11 through 13 being at present in the experimental developmental stages. More specifically, the structure of FIG. 11 shows an outer stainless-steel conduit 132 having an inner layer of host/sensltizer material 135 and two inner concentric perforated metal cylinders 136 and 138. The cylinder 136 in aperture in a manner indicated generally in FIG. 12 of the drawings. FIG. 13 shows the composite structure of the cylindrical wall 138, which has apertures 140 spaced less frequently than the apertures in the cylindrical wall 136, and covered with a very thin composite film of silver and aluminum. In the schematic showing of FIG. 13, the substrate 142 is a very thin layer of rolled silver, and it is provided with a vapor deposited coating of aluminum 144 which is applied to the layer of silver 142 after it has been secured in place on the screen 138 by epoxy glue or the like. A silver layer is rolled very thin in a manner similar to gold leaf, and may be only a few Angstrom units thick. It is known that a very thin layer of silver will transmit most ultraviolet radiations shorter than about 3100 Angstroms; however, it is known that deposited aluminum layers do not transmit significant amounts of radiation until the wavelength is significantly shorter than 2,000 Angstroms and then transmits freely below 1000 Angstrom units. The use of a very thin rolled silver layer for support of the vapor deposited aluminum layer 248 is a convenient technique for obtaining the desired transmission qualities, emphasizing the transmission through the cylinder 138 of ultraviolet radiations of high intensity, which are well within the ultraviolet absorption band of water vapor at which it readily dissociates.

As shown in FIG. 11, radiation such as that indicated by the line 148, which originates from the host/sensitizer layer 134, will pass through some of the apertures in the cylinder 136, and will be subject to multiple reflections between the two stainless steel cylinders 136 and 138 until the radiation finally passes through one of the openings in cylinder 138, as indicated by the arrowhead 150. The two stainless steel cylinders 136 and 138 form a resonant cavity into which progressively more energy is fed by the radiation from the host/sensitizer layer 134 passing through the openings in cylinder 136. As more and more energy is pumped into the resonant cavity, its energy content increases, as the energy cannot escape, and finally the energy reaches such a high level that the frequency is shifted upward and the contained energy is "dumped" at the higher frequency levels through the selective transmission fill. Incidentally, this frequency shift phenomenon is similar to that which occurs in a kiln, as more and more energy is supplied to it and the temperature within the kiln increases from the infrared to a bright red and finally to white heat, radiating progressively higher frequencies as the energy within the kiln or reservoir increases. The "wave-compression" or frequency increase is accomplished in resonators where electromagnetic fields can exist whose distributions of amplitudes and phase reproduce themselves upon repeated reflections between mirrored surfaces. These particular electromagnetic field configurations comprise the transverse modes of a passive resonator. The "wave-compression" may be calculated by means of Schroedinger equations involving the Infinite Square-Well Potential. The "Infinite Square-Well Potential" analysis approach is often used in quantam mechanics to represent a condition in which a particle/wave duality moves in a restricted region of space under the influence of forces which hold it in that region. Although this simplistic potential loses some details of the motion, it retains the essential feature, which is binding a wave particle to a region of a certain size, by means of forces of certain characteristics. The resonator as shown in FIG. 11, with the output filter of FIG. 13, is clearly analogous to the physical systems which have been previously been analyzed using the square-well potential approach. More rigorous mathematical analysis reaching the same conclusions may be accomplished using square-well potential theory and Schroedinger's equation, following the approach set forth in the text entitled, "Quantum Physics of Atoms, Molecules, Solids, Nuclei, and Particles", by Robert Eisberg and Robert Resnick, Copyright 1974 John Wiley & Sons, Inc., pages 226 through 239, and Appendix G, pages G1 through G6.

The action of the high pass filter, including the aluminum and silver layers 142 and 144 associated with the perforated cylnder 138, is similar to the cavity dumping principles employed in lasers. More specifically, it may well be compared to the well-known laser system known as "pulse-transmission mode Q-switching" which is a means for generating extremely short (time) Q-switched laser pulses by Q-switching a laser with 100% reflective mirrors on both ends of the oscillator cavity, and then at the peak of accumulated stored energy, rapidly switching the output mirror from 100% to a very low percent reflection, or high transmission. This allows a very rapid dumping of the accumulated optical energy from within the cavity. As noted above, the effect of the composite screen 142, 144 is very similar in that, as the frequency of the radiation builds up to the ultraviolet levels, it is immediately permitted to radiate through the composite screen and into the central reaction zone within the cylinder 138 to dissociate water vapor therein.

Referring now to FIGS. 14 and 15 of the drawings, the disclosed apparatus is similar in many respects to those shown in FIGS. 1 through 5 of the drawings. More particularly, the apparatus as shown in block diagram form in FIG. 14 includes four reservoirs, 162, 164, 166 and 168 for water, steam, hydrogen and hydrogen peroxide, and finally, the low pressure or vacuum tank 168. In FIG. 14, the block 170 shown in dashed lines represents the space within the stack or chimney from which the waste heat is being derived. Within the stack 170 are located the heat exchanger 172 which is employed to turn water from tank 162 into steam and supply it back to the reservoir 164; and the four combined reaction chamber and heat exchange units 174, 176, 178 and 180. Associated with each of the units 174, 176, 178 and 180 are three valves designated S, H and V. The four reaction chamber units are operated sequentially so that hydrogen or hydrogen peroxide is generated continuously. Regarding the cycle for each one of the individual units, initially the input valve designated "S" is opened to admit steam; and the output valve designated "H" is opened to the hydrogen and hydrogen peroxide storage tank 166. After a predetermined period of time, when most of the reactant in the reaction chamber, such as 174, has been oxidized to a higher oxidation state, the hydrogen valve designated "H" is closed, and the valve "V" leading to the low pressure or vacuum chamber 168 is opened to disproportionate the metal oxide at a lower pressure. The sequential mode of operation is disclosed in greater detail in my prior patents cited hereinabove.

Also shown in FIG. 14 is the vacuum pump 184 and the torch or burner 186 which is shown to indicate a useful load. Suitable check valves 188 may be provided as indicated, and elsewhere in the system, such as in association with the "H" valves leading from each reaction chamber to the hydrogen and hydrogen peroxide reservoir 166. The valve designated "E" indicates the exhaust from the vacuum pump 184.

FIG. 15 shows a pilot plant implementation of the system diagrammatically shown in FIG. 14. In FIG. 15, the stock 170 is shown at the upper left, and encloses the small diameter piping 172 wherein the steam is formed, in addition to the reaction chamber--heat exchanger assemblies 174, 176, 178 and 180. The conduits generally indicated by reference numeral 192 interconnect the heat exchanger components with the remainder of the apparatus located outside of the stack, and including the four reservoirs 162, 164, 166 and 168. The cyclic operation of the four heat exchanger--reaction chamber units is controlled by the cams 194 which operate the valves S, H, and V associated with each of the four reaction chambers. The cam shaft is driven by a small electric motor 196. The remaining components shown in FIG. 15 generally carry the same reference numerals as the corresponding parts shown in the diagram of FIG. 14.

It may be noted in passing that each of the heat exchanger--reaction chamber units 174, 176, 178 and 180 includes a series of vertically oriented conduits of relatively large diameter, interconnected by smaller diameter conduits at the top or the bottom, so that flow through the larger diameter upright conduits is maintained from one end of the first large diameter conduit to the end of the last one. In practice, the small diameter horizontal tubes interconnecting the larger diameter conduits, are empty; but the larger diameter vertically extending conduits contain metallic oxide, such as manganese oxide, having a cross sectional configuration somewhat like that shown in FIG. 5. When the oxide containing reaction chambers are vertically oriented, there is little opportunity for the water vapor to by-pass the oxide material, unlike a horizontal configuration, for example, wherein the oxide might fall away from the upper wall and permit unhindered flow of the steam through the system without dissociation. Concerning the mode of forming spaces within the metal oxide, such as manganese oxide, one possible arrangement has been discussed hereinabove in connection with FIG. 5. In another alternative embodiment, the metal oxide may be initially mixed up in a batch interspersed with a material which will be driven off at higher temperatures but below the operating temperature of the unit. In one case, a substantial quantity of very thin spaghetti was employed, and the result after driving off the spaghetti through heating to elevated temperature, was porous and channeled so that good flow of steam via a circuitous path through the metal oxide was achieved.

Incidentally, the preferred metallic oxide, manganese oxide has several oxidation state. At atmospheric pressure MNO.sub.2 disproportionates to MN.sub.2 O.sub.3 at 535 degrees centigrade, which corresponds to approximately 995 degrees Fahrenheit and about 808 degrees Kelvin. Also, MN.sub.2 O.sub.3 disproportionates to MN.sub.3 O.sub.4 at approximately 1,080 degrees Centigrade, corresponding to approximately 1,976 degrees Fahrenheit or 1,353 degrees Kelvin. With an assumed stack temperature in the order of 1,200 degrees Kelvin, or about 927.degree. C., or 1,701 degrees Fahrenheit, the disclosed system will absorb oxygen and disproportionate between MNO.sub.2 and MN.sub.2 O.sub.3, under normal conditions. However, when temperatures above 1,080 degrees C. are present in the stack, additional oxidation and sequestering of the oxygen may take place to include the MN.sub.3 O.sub.4 oxidation state of manganese. ow, turning to a consideration of temperatures and radiation frequencies, operation at a temperature in the order of 1000 degrees Kelvin will be briefly considered. Initially, it is noted that 1000 Kelvin is in the order of 727 degrees Centigrade, and this in turn is in the order of 1340 degrees F. As noted hereinabove, the temperature for the dissociation of MnO.sub.2 to Mn.sub.2 O.sub.3 at atmospheric pressure is approximately 535 degrees C. Accordingly, at the higher temperature of 1000 degrees Kelvin or 727 degrees C., such dissociation at a reduced pressure of perhaps 1/10th atmosphere will go forward rapidly. At lower temperatures, even below 535 degrees C., the process may still be operated, but with oxides other than manganese oxide. Other metals and oxides thereof which may be used, are mentioned in column 37 of my prior U.S. Pat. No. 4,113,589, and these include antimony, cesium, barium, iron, manganese, chromium, iridium, nickel, and thallium, and eutectics or alloys of these metals and their oxides. Specific oxides which may be used and their minimum temperatures include lead oxide having a critical disproportionation temperature of 370 degrees C., nickel oxide having a critical temperature of about 600 degrees C., potassium peroxochromate having a critical temperature of only 100 degrees C., Strontium oxide, having critical temperature of 215 degrees C., and telurium oxide having a critical temperature of about 400 degrees C. If desired, the units 21, 22, 23 and 24 may include different oxides, with the cooler gases toward the upper portion of the stack being uitilized to work with some of the oxides which disassociate at atmospheric pressure at temperatures below manganese oxide, for example. Alternatively, if the stack gases remain at a reasonably high temperature as they pass the heat exchange units 21 through 24, or in the event that arrangements such as those shown in FIGS. 3 and 4 are employed, a single oxide such as manganese oxide may be employed.

It may also be noted with regard to the radiation inward from the walls of the pipes which are exposed to the exhaust gases, that a temperature of 1000 degrees Kelvin will produce radiation in a "black body" which will peak at a wavelength of approximately 2 microns, as shown in FIG. 15 of U.S. Pat. No. 4,113,589 cited hereinabove, and the radiation will extend to a significant degree into the lower frequency end of the visible spectrum. In this connection it may be useful to note that the visible spectrum extends from about 0.4 to 0.7 microns, corresponding to 400 to 700 millimicrons, and the equivalent band expressed in Angstrom units is 4,000 to 7,000 Angstrom units. With an ambient temperature in the order of 1000 degrees Kelvin, ample excitation for the host/sensitizer combinations as set forth hereinabove is available. In the event of somewhat lower exhaust gas temperatures, supplemental heating from the generated hydrogen may be employed locally at the individual heat exchange units, or may be supplied to the main process to further increase its temperature, and both of these possibilities are indicated by the feedback conduit 152 as shown in FIG. 1. In closing, it is to be understood that the foregoing description and the drawings merely refer to one illustrative embodiment of the invention. Thus, by way of example and not of limitation, the heat exchange arrangements may have any suitable configuration which enhances heat transfer and minimizes back pressure, and these may be other than those shown in the drawings; the dissociation of the water vapor may be accomplished by (a) the sequestering of oxygen from water vapor by metallic oxides, (b) the generation of suitable frequencies within the absorption bands of water vapor by suitable host and sensitizer combinations, (c) by appropriate multiphoton absorption processes, and (d) any combination of the foregoing including the further dissociation of water vapor by high excitation photons or particles; and other filtering materials may be employed which are different from those disclosed in connection with FIG. 13 of the drawings. Accordingly, it is to be understood that the present invention is not limited to the embodiments precisely as described hereinabove and as shown in the accompanying drawings.

U.S. Patent Jun. 9, 1981 Sheet 1 of 6 4,272,345

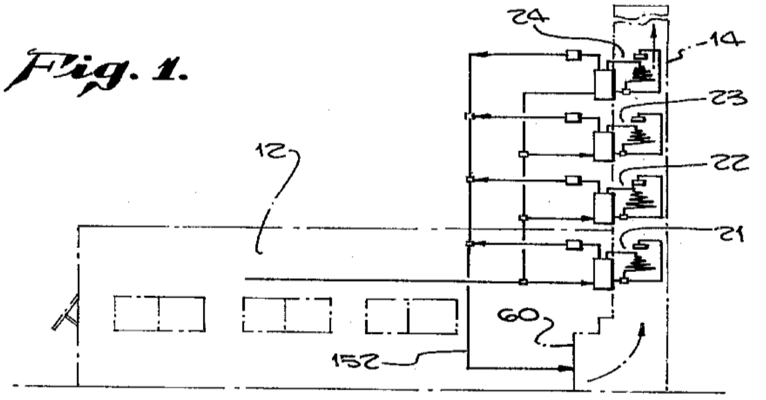
Fig. 1.

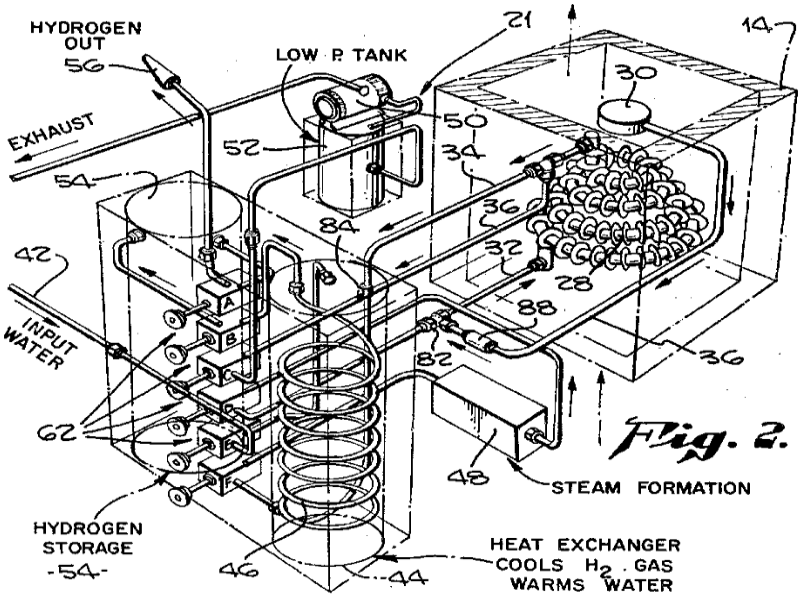
Fig. 2.

4.0.2.5. Method for chemical reactions using high intensity radiant energy and system

US Patent #: **4,247,379;**

An apparatus for accomplishing photochemical reactions includes a series of reaction chambers and a heat exchanger. When the apparatus is employed for the production of hydrogen and hydrogen peroxide from water or water vapor, cold water is initially passed through the heat exchanger to cool the output gases; and then the water is further heated and turned to steam, prior to supplying it to the reaction chambers. The elongated photochemical reaction chambers are connected in series, with the water vapor being coupled to pass successively up one elongated reaction chamber, down the next and so forth. Each reaction chamber is provided with a central gas discharge device for producing characteristic output radiation at various lower frequencies. Enclosing the elongated gas discharged tube is a reaction zone or reaction chamber; and between the gas discharge tube and the reaction zone are arrangements including a metallic film, such as aluminum, which is highly transmissive to short wave - length but which reflects the lower frequencies initially radiated by the gas discharge tube. Various arrangements including resonant cavities, a slotted shield, or coherent radiating material may also be provided to facilitate shifting of the lower frequencies from the gas discharge device to higher frequencies which will pass through the metallic coating, to irradiate the reactant with ultraviolet radiations.

REFERENCE TO RELATED PATENT APPLICATIONS

This patent application is a continuation-in-part of U.S. patent application Ser. No. 879,226, filed Feb. 21, 1978, now U.S. Pat. No. 4,193,879.

This invention relates to photochemical reaction techniques and apparatus.

BACKGROUND OF THE INVENTION

As disclosed in my prior U.S. Pat. No. 4,148,701, granted Apr. 10. 1979, and in my subsequent U.S. patent application cited hereinabove, and in the references cited therein, it has previously been proposed to dissociate gases by irradiating them with coherent radiation from laser apparatus; and mercury vapor gas discharge tubes have previously been proposed for use in the implementation of photochemical reactions.

In many cases, however, the reactant has high absorption to frequencies in the ultraviolet frequency band when high levels of radiation are present. Up to the present time it has not been practical to obtain very high intensity ultraviolet radiation on a commercial scale and at a reasonable cost. Accordingly, a principal object of the present invention is to provide a relatively simple apparatus for the production of high intensity, high frequency ultraviolet irradiation for use in ionizing gases, in photochemical processes, and particularly for the dissociation of water vapor to form hydrogen and hydrogen peroxide.

SUMMARY OF THE INVENTION

In accordance with one aspect of the present invention, it has been determined that the output radiation from gas discharge tubes such as mercury vapor, sodium vapor, and other similar tubes, which have a large portion of the output energy at relatively low frequencies, can be raised to the higher energy ultraviolet range by the use of films such as thin metallic films of copper or silver, to permit the transmission only of the higher frequency ultraviolet wavelengths. In cooperation with these selective transmission films, the apparatus includes other arrangements such as high frequency cavities bounded by reflective material, or laser-type material capable of harmonic generation, for facilitating the frequency shift.

Other features include arrangements for preheating the input water in a heat exchanger which cools the output gases, such as hydrogen or hydrogen peroxide; feedback arrangement for supplying limiting amounts of hydrogen or hydrogen peroxide back to each of the reaction chambers to increase the kinetic energy of the ongoing photochemical reaction; gas discharge pulsing arrangements for successively initiating chain reactions in the various reaction chambers included in a single system; and "flow through" arrangements for supplying the reactant from one end of the first of several parallel elongated reaction chambers, back through in the opposite direction in the adjacent reaction chamber and so forth throughout the entire series.

In one structural arrangement, a slotted reflecting cylinder encompasses the gas discharge tube, a series of reflectively coated laser rods are spaced around the slotted reflector, and the outer coating on each of the laser rods is cut away where it is adjacent an associated slot, to receive pumping energy from the gas discharge tube. With the outer coating on the laser rods being of aluminum or other frequency selective transmission material, only the harmonic radiation from the laser rods is radiated into the enclosing reaction chamber.

In another embodiment, a series of elongated resonant chambers are spaced around the gas discharge device, and have reflecting walls except for one slot for receiving radiation from the gas discharge device and additional openings for radiating higher frequency energy through a selective transmission film, into an outer reaction chamber. As more and more energy is pumped into the resonant chamber, the energy content increases, as it cannot escape, and finally the energy reaches such a high level that the frequency is shifted up ward and the contained energy is "dumped" at the higher frequency levels through the selective transmission films. Incidently, this frequency shift phenomenon is similar to that which occurs in a kiln, as more and more energy is supplied to it and the temperature within the kiln increases from the infrared to a bright red and finally to white heat, radiating progressively higher frequencies as the energy within the kiln or reservoir increases.

In accordance with another embodiment of the invention, the entire space within and surrounding the gas discharge device may be formed into a resonant cavity with selected areas of the special transmittance film to radiate into the reaction chamber in accordance with the cavity dumping phenomenon mentioned hereinabove.

From a somewhat different aspect, the invention involves the intense irradiation of relatively concentrated gas molecules by photons having a higher energy content than that required to fully ionize the molecules; so that the resultant energetic particles, and subsequent energetic and powerful photons generated upon recombination of atoms and electrons, will provide further ionization of the gas molecules. Under conditions of relatively high gas molecular concentrations, wherein the ionization reaction is "caged" or "imprisoned" by other gas molecules, and under other conditions for precluding significant dissipation of energy, successive stages of ionization and finally of dissociation may be obtained from a single high energy ionization of a molecule by high energy photons. Further, when the reaction chamber is flooded with such high frequency photons, the direct, the indirect, and chain-produced ionization, all supplemented by multiphoton absorption, will produce high yields of the desired output gases.

Other object, features and advantages of the invention will become apparent from a consideration of the following detailed description and from the accompanying drawings.

DETAILED DESCRIPTION

Referring more particularly to the drawings, FIG. 1 is a sideview of a photochemical apparatus illustrating the principles of the present invention. More specifically, the system of FIG. 1

includes as its major components, the heat exchanger 14 and a series of six reaction chambers 21 thru 26. A central gas discharge lamp, which may for example be a mercury vapor lamp, extends for most of the length of each of the reaction chambers 21 thru 26, and is centrally located in each of them, as will be disclosed in greater detail below. The electrical cables 28 and 30 extend from the electrical switching timing and power supply unit 32 to the individual terminals at the top and bottom of the gas discharge devices.

When the apparatus of FIG. 1 is employed to dissociate water, and to form hydrogen and hydrogen peroxide, water is initially supplied to the input metal tubing 34, is circulated through the coil 36 within the heat exchanger 14, and the warmed water is drawn off through another conduit 38. From conduit 38, the water is supplied to a conventional steam generator 40 and is returned to the apparatus as water vapor, through the metal tubing 42. It is supplied to the lower end of the reaction chamber 21, and is coupled by the tube 44 to the upper end of the next successive reaction chamber 22. After traversing the length of the chamber 22 to its bottom, it is coupled by the metal tubing 46 to the bottom of the next adjacent reaction chamber 23. Similarly, the water vapor and resultant product gases are interconnected from reaction chamber to reaction chamber by the metal tubing sections 48, 50 and 52, and the hydrogen and hydrogen peroxide product gases from reaction chamber 26 are coupled to the left-hand end of the manifold 54 and then connected by the larger metallic conduit 56 to the lower end of the heat exchanger 14. The cooled gases are shown off from the upper end of the heat exchanger 14 through the conduit 58, and are supplied to storage tank 57 through check valve 59.

Extending from the hydrogen manifold 54 are a series of metal tubes 60 which connect to the individual reaction chambers through separate check valves 62 which only permit unidirectional flow from manifold 54 to each of the reaction chambers to allow feedback flow of hydrogen or hydrogen peroxide gas carrying kinetic energy into the reaction chambers. Also the feedback paths facilitate the smooth flow of gases by passing pressure surges in the manifold back to the reaction chambers.

FIG. 2 shows a partially broken away rendition of one of the reaction chamber assemblies 21. In FIG. 2 the outer wall 64 may be formed of stainless steel or aluminum, and centrally mounted within the reaction chamber is a gas discharge tube 66. This gas discharge tube may for example be a mercury vapor tube, but other gas discharge devices including sodium vapor or other known elements could be employed. When the gas discharge devices are in the order of three feet in length, the envelope would be approximately one-half inch in diameter; and when longer units such as four or five foot units are employed, a larger diameter such as one inch might be employed for the discharge device 66. Surrounding the gas discharge device 66 is a slotted stainless - steel cylinder 68. Around the outside of the stainless steel member 68, are a plurality of longitudinally extending cylindrical structures 70 which are useful in converting the relatively lower frequency radiation from the gas discharge tube 66, to flood the interior of the reaction chamber, between the wall 64 and the elements 70, with high intensity ultraviolet radiation. The cylindrical elements 70 may be in one of several forms, as discussed hereinbelow.

FIG. 3 is a cross-sectional view taken along lines III--III of FIG. 2, and FIG. 4 is an enlarged cross-sectional view showing one of the elements 70 and its association with the slotted cylinder 68 in greater detail. As shown in FIG. 3, the central gas discharge tube 66 is spaced from the enclosing slotted stainless - steel cylinder 68, and the longitudinally extending members 70 are mounted adjacent the successive slots 72 in the element 68. As shown in greater detail in FIG. 4, the rods 70 may be of laser material such as suitably doped aluminum oxide, used in the ruby laser, or other known laser materials. To enhance laser action, and the generation of harmonic frequencies, the outer surface of the cylindrical laser member 74 may be coated with a film 76 of aluminum or other suitable material having high reflection at visible wavelengths but low reflectance and high transmissivity for frequencies in the ultraviolet spectrum. For completeness, FIG. 9 shows these properties for an evaporated film of silver and of aluminum. The plots of FIG. 9 are from an article in the Physical Review, Volume 55, page 1064, 1939, authored by J. B. Sabine. The film 76 is removed from that portion of the cylinder 74 which is mounted immediately adjacent the slot 72, so that pumping radiation may readily be received by the laser material 74 from the gas discharge pumping source.

Concerning the mode of operation of the laser elements 70, the diameter of the rods 74 is preferably an even multiple of half wavelengths at the lasing output frequency of the material which is employed. In this connection, the fundamental radiation wavelength of a ruby laser is just under 7000 angstrom units. As shown in FIG. 9, the aluminum layer would reflect substantially all of this fundamental frequency. However, at frequencies above the fourth harmonic (wavelength equal to approximately 1,750 angstrom units), the reflectance of the aluminum layer decreases rapidly, so that the radiation of the higher harmonics of the fundamental lasing output will be greatly enhanced. In place of the laser rods 70, the frequency of the radiation transmitted into the reaction chamber portion of the system may be raised through the use of resonators 82 as shown in FIG. 5. The cylindrical resonators 82 are spaced around the slotted cylinder 68 and are located to receive radiation from the gas discharge tube through the slots 72. The structure of the resonator 82 includes three stainless steel elements 84, 86 and 88 which together make up the greater portion of a cylinder which effectively has a first slot 90 facing the slot 72 to permit the entry of radiation into the resonator 82, and additional output slots 92 and 94. Enclosing the greater portion of the stainless steel sections 84, 86 and 88, is the partial cylinder 96, which may be made of a suitable material having high transmission qualities for ultraviolet radiation, and good high temperature strength. One such material is aluminum oxide sold under the trademark "MACOR" by Corning Glass Company. The portion of the cylinder 96 near the slots 72 and 90, is cut away to permit direct juxtaposition of the slot 90 with the slot 72. On the inner surface of the plastic cylinder 96 is a very thin metal coating 98 of material which is reflective to visible light, but which transmits ultraviolet radiation, so that the reaction chamber may be irradiated by ultraviolet radiation through the slots 92 and 94. Although the metal coating 98 need only be at the location where the slots 92 and 94 are present, for convenience, the major portion of the internal surface of the plastic cylinder 96 may be so coated.

Instead of using the cylinder 96 of insulating material, sheet silver may be rolled down to a few Angstroms in thickness, secured across the slots 92, and the aluminum layer may be vapor deposited on to the roller silver substrate.

The mechanism by which the relatively lower frequencies entering the resonator 82 with its highly reflecting sidewalls becomes converted to high frequency ultraviolet radiation which passes through the slots 92 and 94 is relatively complex. It involves the absorption of more and more energy into the resonator 82 until finally, when very high levels of energy storage obtain within chamber 82, frequency conversion takes place, and the resultant higher frequencies are gated or "dumped" through the selective transmission windows 98. More precise mathematical analysis becomes somewhat complicated but may be accomplished by treating the resonator as an "infinite square well potential" phenomenon. In a more simplistic manner, and as mentioned above, the resonator may be analogized to a kiln or other heat sink, which, as more and more energy is supplied to it, gradually increases in its output radiation frequencies. Thus, when heat is initially supplied to a furnace, the furnace gets hot, reaches the infrared range, and a dull red heat, then increases to white heat, and finally at very high temperatures after much additional heat has been supplied to it, reaches the higher blue heat temperature range. Similarly, as more and more energy is supplied to the resonator 82, it eventually reaches a very high energy level at which the generated ultraviolet radiation is "dumped" out through the slots 92 and the ultraviolet frequency transmissive windows 98.

FIGS. 6 and 7 illustrate one arrangement for mounting the resonators 82 about the gas discharge tube 66 and the slotted stainless-steel cylinder 68, for use with the system of FIG. 1. In the arrangement of FIG. 6, only 10 cylinders are employed to enclose the slotted sleeve 68, whereas in the arrangement of FIG. 2, 12 cylinders were employed. Of course, either the laser rods, or the passive resonators may be employed in either the arrangement of FIG. 6 or the arrangement of FIG. 2. The arrangements for supporting the three stainless steel elements 84, 86 and 88 which form a principal part of the resonator 82, are shown in FIGS. 6 and 7. With reference to FIG. 7, it may be noted that plugs 102 having an outer diameter equal to the inner diameter of the resonator are employed at each end of each of the resonator assemblies. The plugs 102 are provided with an orientation extension 104 which fits into corresponding recesses 106 in the resonator mounting block 108. In practice, the plugs 102 may be provided with protrusions or pins 110 aligned with the orientation extensions 104, to properly align the elements 84, 86 and 88, with the slot 90 as shown in FIG. 5 adjacent the slot 72 in the stainless-steel cylinder 68. Following assembly of the three elements 84, 86 and 88 to the plugs 102, the cylinder 96 with its inner layer 98 may be slid over the assembly, with the slot 90 between elements 84 and 88 left exposed, and the entire assembly may be mounted as shown in FIG. 6. Incidentally, the hollow insulating elements which are employed in the mounting of the gas discharge tubes at each end thereof, (see elements 112 and 114), for example, should be made of high quality insulating material of good mechanical strength, such as Macor ceramic, available from Corning Glass Company. The gas discharge tubes are preferably mercury arc discharge tubes of the type available from the "Volt Arc" Company.

FIG. 8 shows another alternative arrangement to implement a passive resonator structure between the outer wall 65 of the reaction chamber and the gas discharge tube 66 at its center. More specifically, in FIG. 8, a plastic cylinder 116 is provided with a heavy coating of reflecting material 118 on its inner surface, whereby a passive resonator is formed immediately around the gas discharge tube 66. At spaced intervals around the inner surface of the cylinder 116 there are provided zones 120 where the only reflecting coating is a very thin layer of aluminum or other selective transmission coating of the type discussed hereinabove with reference to other figures of the drawings and in connection with the plot of FIG. 9. By way of example, the inner reflecting layer 118 may be made up of an initial coating on the inner surface of the cylinder 116 of aluminum; and then after masking the areas 120, a heavy coating of chromium or other uniform high reflectivity coating may be superposed on the inner surface. Then, the resonator would have the advantage of very high reflectivity throughout the visible spectrum and on into the ultraviolet except at the areas 120, and then generated higher frequency radiation is transmitted through the slots or regions 120 in the far ultraviolet frequency range, as indicated by the characteristic of aluminum in FIG. 9. Of course, other suitable materials and coatings may be employed to implement the configuration shown in FIG. 8. FIG. 9, shows plots of the percent reflectance of evaporated films of silver and aluminum, plotted against the wavelength in angstrom units. As indicated by the heavy vertical line and the arrow and legend, the visible band of frequencies extends from approximately 4,000 angstrom units, up to about 7000 angstrom units, with the color blue being at the shorter end of the wavelength spectrum, and red being at the longer end. As indicated by the plots for silver and aluminum in FIG. 9, the reflectivity of silver is very high in the visible spectrum but drops off rapidly in the near ultraviolet band. On the other hand, aluminum has moderately high reflectance down to about 2000 angstrom units, and then, in this frequency band in the far ultraviolet, its reflectance drops off rapidly until it transmits virtually all of the incident radiation at wavelengths shorter than about 1000 angstrom units. FIGS. 10, 11, and 12 are drawn from my prior U.S. patent application Ser. No. 879,226, cited hereinabove. In FIG. 10, the envelope of the gas discharge tube 66 is designated by this reference numeral, and a series of spheres 126 are mounted on its outer surface. The spheres 126 are provided with an outer reflecting coating 128 of selective transmitting material, such as an evaporated film of aluminum as discussed hereinabove, see FIG. 11. The spheres 126 are secured to the glass discharge envelope by frit 130, which is made of suitable material so that the pumping radiation 132 from the gas discharge device is not impeded in its path into the laser material 126. This phenomenon is shown more diagrammatically in FIG. 10 in which the ionized gas of molecules or atoms 134 of mercury or other suitable material are shown directing the radiations 132 through the envelope 66 and into the spheres 126. In FIG. 10 the reactant is shown on the other side of the envelope 66 and includes large molecules of water 136, smaller molecules representing atoms of oxygen 138, and the smaller circles 140 which represent hydrogen atoms or molecules. With the construction as shown in FIGS. 10 and 11, the pumping radiation from the gas discharge tube 66, which may be in the visible range, pumps the ruby laser material, aluminum oxide suitably doped, to the excited state, and laser operation is initiated. With substantially total reflection from the outer coating 128 in the visible spectrum where a ruby laser normally operates, higher harmonics will be generated and harmonics such as the fifth or higher will be readily transmitted through the aluminum coating 128 and radiate into the reaction chamber surrounding the discharge tube 66. This dissociates water vapor molecules such as those indicated at 136 in FIG. 10 to form hydrogen gas and oxygen, which recombine to form hydrogen peroxide in many cases. FIG. 12 is a greatly enlarged showing of a filament of 142 of laser material provided with an outer coating 144 of suitable reflecting qualities such as aluminum, as shown in FIG. 9. As in the case of other embodiments employing laser material, the distance 146 between reflecting surfaces should be an integral number of half wave lengths at the lazing frequency of the laser material This would of course also be true of the diameter of the spheres 126 of FIGS. 10 and 11. Also, the output radiation from the filament 142 of FIG. 12 would primarily be in the far ultraviolet frequency region. Now that the basic structure of the present apparatus has been described, certain background and associated information will be set forth. In this connection and by way of background, attention is directed to the May 1979 Scientific American, in which the article entitled, "Laser Chemistry" starting on page 114 and extending through page 128 is noted. FIG. 13 is a showing similar to that of FIG. 12, but with the packets of incident waves shown in more diagrammatic manner. Specifically, the radiation from the discharge tube within the envelope 66 is represented by the line 152 and the superposed relatively low frequency sine wave 154 associated therewith. The laser sphere 126 is provided with an outer coating of copper 128 which substantially fully reflects relatively low frequencies such as the incoming wave 152. However, after repeated reflection from the surface 128, harmonic energy is generated and this higher frequency energy is radiated out through the coating 128 as indicated by the arrow 156 and the associated higher frequency sine wave 158. FIG. 14 shows an alternative arrangement of passive resonator for use with the gas discharge tube 66 and the reaction chamber 64, as shown in FIG. 2. More specifically, FIG. 14 shows a thin coating 160 directly on the outer surface of the quartz envelope for the gas discharge tube 66. This coating 160 is of the high frequency transmissive type such as the aluminum layer, the characteristic of which is shown in FIG. 9 of the drawings. In addition, a thicker coating 162 of a fully reflecting metal is laid down on top of the coating 160, but with slots permitting radiation to pass through at a number of points around the periphery of the tube 66. On the other hand, even when radiation passes through the layer 160, if it is in the vicinity of the thicker fully reflecting layer elements 162, it cannot pass through, but is reflected back into the space within the discharge tubes 66. Finally, after numerous reflections within the gas discharge envelope 66, as indicated by the characteristics 164, certain higher frequency radiations which have been generated pass through one of the slots in the layer 162 and enter the space 166 between the coated envelope 66 and the peripherally extending slotted conductor 168 interposed radially between the central discharge tube and the main reaction chamber region 170. The purpose of the slotted reflector 168 is to cause further reflections back and forth within the region 166, finally permitting even higher frequencies, having correspondingly more energetic photons, as indicated by the wave packet 172, to pass out into the reaction zone 170. FIG. 15 shows a somewhat different structure following similar principles as the arrangements of FIG. 14 and certain earlier embodiments of the invention. In FIG. 15, between the centrally located gaseous discharge tubes 66 and the outer walls 64 of the reaction chamber, are included the quartz or aluminum oxide tube 176 which is coated with a thin aluminum layer 178, and the reflecting heavy metal cylinder 180 which is provided with angled slots 182. The higher frequencies which pass through the aluminum coating 178 are reflected back and forth between the reflecting surface of the cylinder 180 and the layer 178, until the higher frequency radiations finally impinge on one of the slots and are transmitted through, as indicated by arrows 184, into the reaction chamber 186. Now that the principal elements of structure which are included in the system have been described it is appropriate to mention some of the background factors which lead to the structures which have been described. Initially, in the following tables, the energy required for molecular dissociation is set forth in Table No. I, and the energy required for ionization at the lowest levels, both for atoms and molecules is set forth in Table II, as follows:

It is evident that, for the ionization of a molecule of water vapor by a single photon, it is necessary that it have a wavelength less than 984.1 angstroms, or a higher frequency. At lesser energy levels involving longer wavelengths and lower frequencies, multi-photon absorption is required for the ionization of water vapor. Further, if a single molecule vapor is hit with a large number of high energy photons in a short period of time, even where each of the photons could have ionized the molecule by itself, the energy may still be absorbed by the molecule with the result that highly energetic output products are produced.

In the present system as shown in FIG. 1, each of the mercury vapor arc lamps is capable of emitting approximately 10,000 joules of radiated energy, and the set of six therefore produces the order of 60,000 joules. For mercury vapor, this energy is emitted in the form of 13 principal spectral lines. While other fainter or weaker output frequencies are present, these 13 principal lines are more important ones and were accepted for design calculations. None of these radiations are acceptably effective at the wavelength as emitted, as they do not couple strongly with the absorption bands of water vapor and are accordingly relatively ineffective. In the present examples, the wavelengths are compressed, on the average, to about 25% of the normal emissions. Of course, the corresponding increase of the frequencies is approximately 400%.

The wave compression is accomplished within the passive resonators by restraining and containing all input radiation within the resonator cavities until the compression level reaches the design point at which all the radiation energy contained in the resonator cavities is "dumped" automatically in an action called "cavity-dumping". The energy emitted by the resonators, except for some heat losses, is nominally the same amount of energy which entered the resonators. Of course, the characteristics are entirely different, and the differences may be studied by comparing

In considering the foregoing tables, it may be noted that the sum of the power of the 13 frequencies from the mercury vapor lamps is 60,000 joules, and the sum of the power in the four representative frequencies indicating the nature of the higher frequency radiation, is also equal to 60,000 joules. Incidentally, Table IV is derived in part from FIG. 9 and is based on the use of an aluminum film as the filter at the ouput of the resonator.

The wave compression action reduces the number of photons to about 24% or 25% of the original number of photons comprising the "pumping energy". However, ignoring the nominal heat losses from convection, the amount of energy carried by these fewer numbers of photons is still approximately equal to the 60,000 joules which were initially present. Each individual (averaged) photon leaving the resonators is carrying about 415% more (redistributed) energy than the individual photon entering the resonators. The resonators restrain the wavelengths to those wavelengths between about 600 angstroms to about 1500 angstroms. With resonators employing films having different cutoff frequencies or wavelengths, the frequency could be shifted higher, with correspondingly shorter wavelengths to reduce the wavelengths to below 200 angstroms.

A crude analogy to this optical wave compression may be found in a simple high temperature ceramic kiln as mentioned hereinabove. The heating elements are continually pumping the kiln with long-wave infrared radiation. The insulation contains the energy, and the temperatures climb upward. As the radiated infrared energy continues to irradiate the kiln interior from the heating elements, the color of the kiln interior changes from dull red, to bright cherry red, to orange-red, to orange, to yellow, to white, and finally to blue-white. These color changes reflect the "wave compression" of the radiated energy contained within the kiln cavity. More rigorous mathematical analysis reaching the same conclusions may be accomplished using square well potential theory and Schroedinger's equation, following the approach set forth in the text entitled, "Quantum Physics of Atoms, Molecules, Solids, Nuclei, and Particles", by Robert Eisberg and Robert Resnick, copyright 1974 John Wiley & Sons, Inc., pages 226 through 239, and Appendix G, pages G1 through G6. Incidentally, the beating together of two or more radiations, such as those of 1500 and of 1100 Angstrom units wavelength, in the presence of media discontinuities, such as the feedstock, in the reaction chamber, will produce additional higher frequency radiation, as a result of the sum and difference frequencies (particularly the sum frequencies) which are generated. Now, returning to the drawings, FIG. 16 indicates diagrammatically some of the phenomena which occur within the reaction chamber. In connection with FIG.

16, attention is particularly directed to Table I which shows the energy required for molecular dissociation, Table II indicating the energy required for the ionization of various atoms and molecules, and Table IV which indicates the energy levels present in the high frequency radiations from the resonant chambers. It is also noted that, with the geometry employed in connection with the present structures, the water vapor supplied to the reaction chambers is flooded with very high frequency and high intensity radiation having energy content adequate for dissociation and ionization. Under these conditions, the phenomenon of "multiphoton absorption" in which a single atom or molecule absorbs a large number of photons within a short interval of time, also frequently takes place. It is also noted that the ionization reaction in each atom and molecule is surrounded, or "caged" by large numbers of un-ionized water vapor molecules so that the energy generated, both in terms of the kinetic energy of electrons and positive ions, as well as the generated photons, will impinge on these other water vapor molecules and ionize or dissociate them, in turn. In the showing of FIG. 16, the reaction starts with the impingement of a large number of high energy photons 192 on the water vapor molecule 194 in a multiphoton absorption process involving the arrival of the photons 192 within a very short interval such that they are all absorbed by the water vapor molecule 194. Now, referring back to Table IV, we will assume, for simplicity, that all of the incident photons 192 have energy equal to 20 electron volts, making a total of 160 electron volts, which is substantially instantaneously absorbed by the water molecule 194. With only about 2.51 electron volts being required for the molecular dissociation of water vapor, and with only 12.6 electron volts being required for the ionization of the atoms and molecules of water vapor, the applied 160 electron volts will "blast" the molecular structure apart. In addition to fully dissociating and ionizing the hydrogen and oxygen atoms included in the water vapor molecule, very large amounts of kinetic energy are supplied to the resultant charged particles, including the electrons and atomic nuclei. The dashed lines 196 and 198 extending from the water vapor molecule 194 indicate the high velocity particles emanating from the original location, in this simplistic showing of FIG. 16. The ejected electrons are instantly subject to "recapture" by any proton nucleus. In the electron-ion recombination "capture" process, the electron must go from a free (positive energy) state, to a bound (negative energy) state, and the electronic energy of the system must be reduced. Also, in a positive ion-negative ion recombination, a similar reduction in electronic energy must be achieved in order for the electron to transfer from the negative ion to the positive ion, thereby neutralizing the system. Then, in both cases, the electronic energy which is released in the course of a recombination event, must be transmitted from this location; this energy may appear in the form of electromagnetic radiation, internal modes of vibration, or rotation if molecules are involved, or translational kinetic energy of any particles participating in the capture process.

In the qualitative diagram of FIG. 16, a pair of recapture events is shown at 200 with the resultant high energy ultraviolet photon being indicated at 202, impinging on an additional pair of water vapor molecules 204, and ionizing each of them in the next step of the chain event. It may also be noted that, during the successive stages of recombination, photons of radiated energy are emitted comprised of the specific frequencies that are characteristic of the atomic structures. Such radiations are indicated by the reference numerals 206. These radiations may vary widely in their frequency and their energy content, and may include, for example, both radio frequency and infrared radiations. Through the phenomenon of multiphoton absorption, many of these radiations will impinge on other molecules or atoms substantially simultaneously with other incident radiations on the same molecule or atom, and cause dissociation or ionization through this multiphoton absorption process. Successive additional steps of ionization of further water vapor molecules is indicated, going from the bottom to the top of FIG. 16, by the row of four water vapor molecules 208 in the third level, and in the row of eight water vapor molecules 210 in the fourth stage.

Quantum Physics indicates that the captured electrons in each case can have only discrete energies corresponding to atomic energy levels detailed in the technical literature. As the newly bound electrons seek the lowest energy level, the successive downward transitions release precise quantized packets of radiations as photons, with clearly defined spectral lines that are superposed at precise frequencies on the spectrum of continuous radiation. The downward cascade of the captured electron, within the quantized ladder of bound energy levels, leads first to the emission of extremely long wavelengths from levels high within the atom. Then, infrared radiation is emitted. This is followed by visible and an abundance of ultraviolet radiation of very short wavelengths.

Returning to FIG. 16, by the time that the photons strike the eight water vapor molecules 210, the energy level is insufficient for ionization, so the phenomenon merely involves dissociation at the two upper levels, where the sixteen water vapor molecules are designated by the reference numeral 212, and the final thirty-two reaction products by the reference numeral 214.

In the diagram of FIG. 16, thirty-three water vapor molecules have been dissociated. Further, this all originated with a single molecule 194 which was powerfully and energetically ionized by the original incident packets of high frequency energy.

Some of the points to be noted from the diagram of FIG. 16 are first, that merely because a number of photons are absorbed by a single water vapor molecule, this does not mean that the excess energy is lost. Instead, this excess energy is re-radiated and utilized in further dissociation and ionization reactions. Secondly, the very high intensity levels of radiation which are present in the reaction chambers of the invention contributes to the multiphoton ionization and dissociation which in some cases over-excites molecules; and in other cases, when the individual photons could not dissociate or ionize alone, the convergence of several photons on the single molecule or atom will cause such action. In addition, the moderately high concentration of water vapor molecules will "cage" the radiation which occurs immediately adjacent the sources of radiant energy, so that the excess energies are appropriately utilized.

Turning to another phase of the invention, it is important to note that the chain reaction mechanism is initiated by radiation supplied from the central discharge tubes, outside of the reaction chamber per se. This input of primary radiation can be supplied either continuously or in a pulsed sequence according to design. Either continuous or pulsed radiation of appropriate wavelength as input to the reaction chamber will initiate large numbers of working chains. As indicated in FIG. 16, product atoms and molecules carry away both internal and kinetic energy. These "excited atoms", both hydrogen and oxygen, can be manipulated, quenched, controlled, or combined into desirable product molecules.

Incidentally, returning to FIG. 1, the system is designed to minimize the size of the electrical component associated with the unit by energizing the mercury vapor tubes associated with the successive reaction chambers sequentially, for discrete intervals. At present, a duty cycle for each tube of one second is contemplated with the successive tubes being fired in order, and the initial tube being energized for another one second interval, every six seconds.

Returning now to the Figures of the drawings, FIGS. 17 through 21 of the drawings show a further alternative arrangement. More specifically, with reference to FIG. 17, this diagram is a simplistic showing of the use of a series of three apertured conductive members 232, 234 and 236, with the screens 232 and 234 defining a first resonator therebetween, and the screens 234 and 236 defining a second resonator. In addition, associated with each of the screens 234 and 236 would be a high frequency short length wave filter element for permitting the transmission of very high frequencies in the ultra violet band but not frequencies in the visible or near ultraviolet frequency bands.

In the schematic showing of FIG. 17, radiation from the discharge lamp is indicated as arriving at arrow 238, and this would be longer wavelength and lower frequency energy. Following processing in the two resonators and passing through the high frequency transmission filters associated with the reflecting surfaces 234 and 236, high frequency and high intensity ultraviolet radiation is transmitted into the reaction chamber as indicated by the arrow 240. FIG. 18 is a more accurate view of the perforated screen which would make up each of the reflectors 232, 234 and 236. It could, for example, be made of a relatively thick self-supporting layer of aluminum, stainless steel, or other high reflectivity materials. FIG. 19 is a greatly enlarged cross-sectional view of the screen 234 showing the solid portion 242 and one of the many holes or apertures 244. The filter for permitting the transmission of far ultraviolet radiations and for reflecting visible light and near ultraviolet radiations may take the form of a two-layer film including a substrate 246 of rolled silver and a vapor deposited coating of aluminum 248, which is applied to the thin rolled layer 246 of siler after it is secured in place on the screen 234 by epoxy glue or the like. The silver layer is rolled very thin in a manner similar to gold leaf, and may be only a few angstrom units thick. With reference to FIG. 9 of the drawings, it may be noted that the silver layer will transmit most ultraviolet radiations shorter than about 3100 Angstroms; however, the aluminum layer does not transmit significant amounts of radiation until the wavelength is significantly shorter than 2000 Angstroms, and then transmits freely below 1000 Angstroms. Accordingly, the use of the very thin rolled silver layer for support of the vapor deposited aluminum layer 248 is a convenient technique for obtaining the desired transmission qualities. In addition, the diagram of FIG. 19 may represent other earlier embodiments of the invention described hereinabove in which 244 would be a slot in one of the cylindrical members 242, and the laminated film 246, 248 would cover these slots. FIGS. 20 and 21 indicate diagrammatically the incorporation of the three reflecting surfaces 232, 234 and 238 into a structure enclosing a gas discharge device 252 and providing high frequency radiation as indicated by the arrow 240 into the outer reaction chambers shown in the earlier embodiments of the invention.

GENERAL CONSIDERATIONS

Any oscillator can be turned into an amplifier by providing a suitable type of feedback. In the present oscillator/resonator, "feedback" is provided by means of highly reflective mirrored surfaces at both ends of an optical path traversing the oscillator cavity. The energy that starts the oscillation enters the cavity through the optical windows facing the gas discharge device in the arrangements of FIGS. 14 and 15 for example. FIGS. 17 through 21 show alternative similar structures using apertures instead of slots. The end mirrored surfaces of a resonator "define" a resonator, and, existing in all resonators are normal modes or resonances . . . field configurations that represent "energy storage within the resonator", and are self-sustaining with the resonator for relatively long periods of time. The modes of an optical resonator are similar to those of a microwave resonator in that they represent configurations of the electromagnetic field that are determined by boundary conditions. It is common to speak of the configuration in the X, Y, directions as the spatial or transverse mode configuration, and quite independently to speak of the Z direction as the longitudinal or temporal mode configuration. In the arrangements disclosed herein, the "Z" direction is radial, perpendicular to the windows and the reflecting walls.

For simplicity we will drop the use of the word "configuration" when speaking further of the resonator modes. The frequencies at which temporal modes can occur are set by the boundary conditions at the reflective surfaces, which determine that oscillation can occur only when there are an integral number of half-wavelength between the reflective surfaces. A basic characteristic of the modes of any resonator is, that they represent energy storage within the resonator as noted earlier. The resonators disclosed herein are (by design) short in the Z direction, unlike normal commercial resonators, also, as compared to the X and Y directions. Short oscillators offer an advantage in that the normal mode separation is quite large, in fact larger than the mean width of the Doppler profile. In this case, stable oscillation in a single mode can be achieved even though the cavity gain is considerably above threshold. Additionally, on an absolute basis, a short resonator/oscillator will experience less distortions per given thermal or mechanical disturbance than a long one. The only known major disadvantage of the short resonator is that its gain per pass is less. In the design of short lasers for single-frequency operation, the length of the resonator/oscillator must be dictated by the Doppler width, as well as gain available and other less important considerations. The short "Z" as used in the present arrangements does not result in (or create) modified energy distribution by diffraction effects as is the case (normally) with long "Z". Near-field and far-field distribution remain the same with short "Z" distance.

In a mode denoted by the notation TEM. sub. mnq, the number "q" denoted the nodes in the electric field between the end reflective surfaces. The number of half-wavelengths in the resonator is then either q or q plus 1, depending in detail on the spatial mode for normal resonators.

If q' is an integer that denotes either q or q plus 1, as appropriate, then the wavelength of the oscillation is given by and the frequency is therefore given by The frequency separation between Modes corresponding to q' and q'+1 is therefore given by where C is the mean speed of light in the medium and L is the length of the optical path between the reflective surfaces.

When the optical path between the reflective surfaces traverses solids as in solid lasers, L becomes an "effective length" by considering possible wavelength changes because of refractive index effects. The quantity C/2L, is therefore fundamental to many details of oscillator operation. Incidently, it is also the inverse of the time required for a radiated signal to travel a complete round trip through the oscillator (or resonator), starting through the entry opening and bouncing between the two reflective surfaces.

When a resonator/oscillator is functioning in many spatial modes as well as in several temporal modes, then the frequency allocations of the various modes become much more complex and will not be treated here.

The accumulated energy is coupled out of the resonator cavity at the desired wavelength/frequency by providing output reflective (mirrors) with transmission T, that is reflective at the optical pump input frequencies and transmitting at the desired output frequencies, as discussed to some extent hereinabove in connection with FIG. 9. This fundamental characteristic can be "predetermined by design", can be structured by means of "narrow band-pass reflectors", which can be produced by the layered combination of suitable materials in discrete multi-element (or multi-compound) assemblies with appropriate thicknesses and stack positions.

The "CAVITY DUMPING SYSTEM" of the present invention can best be described by comparing it to a well-known laser system called "PULSE-TRANSMISSION MODE Q-SWITCHING", which is a means for generating extremely short (time) Q-switched laser pulses by Q-switching a laser with 100 percent reflective mirrors on both ends of the oscillator cavity, and then at the peak of the stored accumulation of energy, rapidly switching the output mirror from 100 percent to a very low percent reflection, or high transmission. This allows a very rapid dumping of the accumulated optical energy from within the cavity.

The present apparatus (like most lasers), uses electrical energy as a source for power. The electrical energy is converted into radiation by means of conventional noble gas, metal vapor discharge lamps or special filament lamps. The selection and use of a particular lamp (pump) is controlled by the type of emissions desired and whether the lamp or pump driver will be operated in a continuous or pulsed mode. The discharge lamps employed in the implementation of the present invention operate at modest current densities and represent a compromise between a monochromatic source and a black body source such as filaments.

The apparatus of the present invention is so structured that all the diverse input wavelengths are combined into a relatively monochromatic narrow band of ultraviolet frequencies. The lamps or optical pumps must be structured of suitable materials so that the lamp envelope is transparent to the desired wavelengths of radiated energy. Available envelope materials (and expense) places very limited parameters on the transmission characteristics of the lamps.

Different materials must be used to make lamp envelopes for different desired wavelength emissions, because the transparency of the available materials to the radiated energy varies from wavelength to wavelength. Glass transmits radiation (light) in the visible region; however, quartz (SiO.sub.2) must be used on the ultraviolet side of the visible spectrum. For practical purposes, quartz is opaque to wavelength much shorter than 2,000 Angstroms, and must be replaced by very expensive SUPRASIL brand quality quartz, which is a very superior grade quartz that does transmit extremely well at 1 mm thickness at 1700 angstroms (85 percent).

Calcium Fluorite (CaF2) may be used (at considerable expense), which transmits well at 1600 Angstroms. Many attempts have been made to find other materials (such as sapphire tubing) to extend the transmission much further down into the vacuum ultraviolet range, which are practical for lamp manufacturing in large quantities and sizes as well as being practical from an economic point of view. No acceptable materials have emerged.

For the purposes of the present invention, we are interested (principally) in the wavelengths from 1,000 down to about 500 Angstroms, with nothing longer than 1500 Angstroms.

Since the commercial lamps that operate as optical pumps actually emit lower frequency broadband radiation by comparison to both lasers and the desired output frequencies for the present invention, we must "accept" these multiple spectral lines into our resonator, combine the multiple spectral lines into a narrow band of substantially monochromatic radiation and then by means of our cavity-dumping system, build up the energy-frequency relationship which shortens the wavelength before we dump the energy from the cavity.

This frequency conversion is a continuous and progressive operation which requires a nominal part of a second for conversion of a photon. It occurs inside a sealed reaction chamber and floods the reaction chamber (photochemical) with large amounts of powerful radiation at selected, predetermined spectral bands.

FREQUENCY/WAVELENGTH/ENERGY RELATIONSHIPS

All electromagnetic radiation can be characterized by its particular wavelength, lambda, lambda. (measured in meters, centimeters, or Angstrom units), or by its wavenumber, nu, .nu. (the reciprocal of the wavelength, .nu.=1/.lambda., commonly expressed in reciprocal centimeters, 1/cm, or cm.sup.-1). Each unit of radiation (a photon) corresponds to a QUANTUM of radiant energy, E, which is directly proportional to the wavenumber, nu.. Since chemical calculations are founded on a MOLE basis, when considering the relationship between radiant energy and chemical processes it is convenient to express radiant energy in Kcal/mole of photons, or Kcal/einstein.

We can do this according to a simple relationship: the radiant energy in 1 mole of photons, with nu. = 350 cm.sup.-1, is equal to 1 Kcal. The derivation of the above simple relationship proceeds as follows: The energy of a photon with a given wavenumber, .nu., is given by the expression:
In this expression, h is Planck's constant h=6.62.times.10.sup.-27 erg.times.sec) and c is the velocity of light (c=3.00.times.10.sup.10 cm/sec), and .nu. is expressed in cm.sup.-1. Therefore, the quantum of energy corresponding to a photon of a given wavenumber is: ##EQU1## We can express this quantum of energy in the Kcal units by using the conversion factor 1 erg=2.39.times.10.sup.-11 kcal, as follows: ##EQU2## and the energy in 1 mole of photons (6.023.times.10.sup.23 photons) is: ##EQU3## The conversion factor between cm.sup.-1 and kcal/mole is: As an example, the energy of photons with .nu.=20,000 cm.sup.-1 is: ##EQU4## And the energy of a single photon of .nu.=20,000 cm.sup.-1 : ##EQU5## Further, physicists normally think in terms of "electron-volts," eV, which is defined as the amount of energy equal to the change in energy of one electronic charge when it moves through a potential difference of one volt. Since the electron-volt is an energy unit, it is in the same category as the foot-pound, the British thermal unit, and the kilowatt-hour. nergies in joules can be converted to electron-volts when divided by e.sub.c =1.60.times.10.sup.-19. In this case (only), the e.sub.c is not a charge but is a conversion factor having the units of joules per electron-volt. It is quite convenient to express photon energies in electron-volts. As an example, we will calculate the energy of 1200 A radiation expressed in electron-volts. ##EQU6## Then, converting from joules to electron-volts: ##EQU7## In the illustrative embodiments of the invention, radiated energy is accepted from the optical pump in all of the different wavelengths which the pump emits. As an example, the pump H15K/77A (mercury vapor) emits 13 different wavelengths that vary from 2420 A to about 10,150 A., and these were set forth in Table III. As mentioned above, the "wave-compression" is accomplished in the resonators where electromagnetic fields can exist

whose distributions of amplitudes and phases reproduce themselves upon repeated reflections between mirrored surfaces. These particular electromagnetic field configurations comprise the transverse modes of a passive resonator. The "wave-compression" was calculated by means of Schroedinger equations involving the Infinite Square-well Potential.

The "INFINITE SQUARE WELL POTENTIAL" analysis approach is often used in quantum mechanics to represent a condition in which a particle-wave duality moves in a restricted region of space under the influence of forces which hold it in that region. Although this simplistic potential loses some details of the motion, it retains the essential feature, which is binding a wave-particle to a region of a certain size, by means of forces of certain characteristics. The resonators employed in the present systems, with their output filter are clearly analogous to the physical systems which have previously been analyzed using the square well potential approach.

The resonator cavities are designed to restrain and retain the input radiation by means of repeated reflections and replications, through a period of wavelength compression. This compression of the wavelength occurs during the "energy (radiated) input period". An accurate analogy is well-known and proven, termed MULTIPHOTON ABSORPTION. This method and means, of raising the energy level of a molecule or atom, within the very limited time parameter of less than 10.sup.-8 second, also raises the frequency in direct relationship with the increase in energy. In other words, the higher the energy, the more numerous are the oscillations and the higher is the wavenumber. The quantum mechanical probability density oscillates more and more as "n" increases. In the limit that "n" approaches infinity, that is for eigenvalues of very high energy, the oscillations are so compressed that no experiment could possibly have the resolution to observe anything other than the average behavior of the probability density predicted by quantum mechanics. Furthermore, the fractional separation of the eigenvalues approach zero as "n" approaches inifinity, so that this becomes a limiting factor in that their discreteness cannot be resolved. We have observed that quantum mechanical predictions actually approach the predictions of classical mechanics in the large quantum number, or high density limit. This is to be expected from the correspondence principle of the old quantum theory.

Reference is also made to my prior granted patents, U.S. Pat. Nos. 4,113,589 and 4,148,701, which are directed to related inventions. More specifically, the efficiency of the apparatus disclosed in the present specification is enhanced, as in the case of the earlier inventions in part as a result of the low energy content gaseous products which are released in the course of the process. These low energy gasous products may include HO and HO.sub.2, which are less well known gaseous products. When these gaseous products are released into the atmosphere, it is believed that they absorb high frequency radiations, and eventually change state, become hydrogen gas, oxygen gas, water vapor, atomic hydrogen and atomic oxygen, with the inputs to the present system including water and oxygen in air. In one sense, therefore, the present system may be considered to utilize solar energy.

It is also noted that the prior copending U.S. patent application Ser. No. 879,226 discloses a number of chain reactions in addition to those of the type shown in FIG. 16. These other types of chain reactions, including gases other than water vapor, could be implemented by the present invention. Some of these reactions included the reaction of hydrogen gas with chlorine to form HCl gas; the reaction of methane with chlorine to form methyl chloride; hydrogenation and olefin formation; the dehydration of alcohols; additional reactions of olefins; and to reactions involving poly-substituted saturated hydrocarbons, benzene, unsaturated hydrocarbons, including the alkyne series, alcohols, carboxylic acids, aldehydes, and ketones.

For completeness, reference is made to certain text material relating to ionization. These include a 1958 text entitled, "Gaseous Conductors" by James Dillon Cobine, Dover Publications, Inc., 180 Varick Street, New York, N.Y., 10014, in which note particularly pages 86 through 91; and "Atom and Ion Sources", by L. Valyi, John Wiley & Sons, London, 1977, in which pages 24 through 45 are of interest.

Also, concerning another aspect of the present invention, in connection with FIG. 9 of the drawings, the matter of coatings which reflect longer wavelength, and which freely transmit wavelengths in the far ultraviolet region, were noted, and the advantages of thin aluminum films was brought out. Other films which could be employed include a film of magnesium on chromium, which has a cutoff frequency in the range between 2000 and 1200 angstroms. Films of iron are also useful for certain applications. It is further noted that successive layers of certain dielectric coatings, either alone or in combination with other layers, have been developed which can be designed to cut off at desired frequencies.

Returning now to FIG. 1, it is noted that the electrical switching and power supply circuit 32 provides sequential energization of the mercury vapor discharge devices within the reaction chambers 21 through 26, with switching circuitry being of conventional configuration, and avoiding the need for a higher capacity power supply. Concerning the feedback tubes 60 from the manifold 54 to the individual reaction chambers 21 through 26, these feedback arrangements may be connected to any desired point along the reaction - chambers and could be connected centrally if desired or to the input point in each of these reaction chambers 21 through 26. It is further noted that, along with the water vapor supplied from the steam generator 40 through the tubing 42, additional oxygen or air may be supplied to each of the reaction chambers through the inlet conduit 42. This would permit the formation of larger quantities of hydrogen peroxide, H.sub.2 O.sub.2, when larger quantities of this output gas are desired.

Incidentally, concerning operating parameters of the system, the six gas discharge tubes may be one inch in diameter and approximately 51 inches long; they may have quartz, pyrex, or lime glass envelopes, and may operate with a voltage of 10,000 volts at about seven amperes, for each tube. Concerning pressures, to avoid condensation of the water vapor the temperature in the reaction chamber should be maintained above 100 degrees C. and could be as high as several hundred degrees. With regard to pressure, it is contemplated that the reaction chambers may operate at from one to several atmospheres pressure. Although the system would be operative at high temperatures and pressures, less problems are encountered at the indicated ranges.

In closing, it is emphasized that the present invention is not limited to the precise structure as illustrated in the drawings and described in the foregoing detailed description. More specifically, other resonator configurations could be employed, both of the passive and active types; the reaction chambers could be operated in parallel rather than in series, either in whole or in part; and the reaction chambers could be if desired, of a more circuitous design, for example, with quartz tubes or helical metal baffles providing longer paths for each of the individual water vapor molecules; and other changes in mechanical, optical, or electrical configuration may be made within the scope of the invention as taught. Accordingly, the invention is not limited to the precise illustrated configurations.

4.0.2.7. High intensity energy transfer technique; US #: 4,113,589;
Septembre 12, 1978 ; (Palos Verdes Peninsula, CA)

An apparatus is disclosed for exothermically obtaining hydrogen or hydrogen peroxide from water vapor. The apparatus includes a mass of reactant which is heated to a high temperature at which it can combine with the oxygen in water vapor exothermically. The separation of the hydrogen and oxygen is accelerated through the use of a combination host and sensitizer material which is present near spaces or voids included in the reactant. The reactant is heated to an elevated temperature such as 1000.degree. K and steam under several atmospheres pressure is applied to the reactant and enters the spaces included in the reactant. The water vapor has certain particular absorption bands in its absorption versus frequency characteristic. Each of the sensitizers which are located adjacent the voids in the reactant, in one embodiment forming part of the walls of small cylindrical tubes, has an energy output in the excited state which is precisely in one of the energy absorption bands in the water vapor characteristic. The host material associated with the sensitizer material absorbs energy from the reactant, which essentially is a high temperature reservoir, and excites the sensitizer material so that it emits energy radiations at the proper frequency for absorption by the water vapor. In addition to the formation of free hydrogen, some hydrogen peroxide is also formed. After the hydrogen and hydrogen peroxide are drawn off, the pressure is reduced, and a vacuum is applied to the reactant, thereby removing oxygen and some residual hydrogen.

RELATED PATENT APPLICATIONS
The subject matter of the present specification is related to that disclosed in the specification of U.S. Pat. application Ser. No. 768,868, filed Feb. 15, 1977 and entitled, "Method and Apparatus for Generating Hydrogen".

BACKGROUND OF THE DISCLOSURE
This invention relates to apparatus and method for increasing the efficiency and amplifying the effectiveness of energy transfer, particularly from a high temperature source of energy. In the specification of the patent application cited above, an apparatus is described in which hydrogen and/or hydrogen peroxide is formed exothermically from water vapor, using a body of material such as manganese oxide raised to a high temperature to sequester the oxygen from the water vapor. The process takes place at relatively high pressure above about 5 atmospheres, and at a temperature in the order of 1000.degree. Kelvin. After the hydrogen is drawn off at relatively high pressure, a check valve closes, and the oxygen is removed from the manganese oxide at a reduced pressure well below atmospheric pressure, by the use of a vacuum for example. As the hydrogen is being drawn off from the reaction chamber, the formation of hydrogen peroxide was disclosed, through the use of a venturi unit by which oxygen from the atmosphere was combined at high temperature with the hydrogen.

SUMMARY OF THE INVENTION
In accordance with one limited and specific aspect of the invention, the breakup of the water vapor molecule, H.sub.2 O, may be accomplished more rapidly and effectively through the use of sensitizer materials and host materials which absorb heat energy from the manganese

dioxide or other reactant and radiate energy which is concentrated in the high absorption portions of the absorption versus frequency characteristic of water vapor to break up the water vapor molecule.

This action is enhanced through the use of small cells which form voids throughout the reactant, and which are provided with the special sensitizer and host material around the periphery of the voids. These voids may be produced by wire mesh cells, or by ceramic cylinders having wire mesh at each end, for example, so that the water vapor may readily pass through the cylinders. The wire mesh or the walls of the cylinders contain the special host and sensitizer materials which apply highly concentrated radiation to the water vapor at precisely the frequency bands at which the water vapor absorbs energy. It is also believed that the atomic radiations from the sensitizer material are coherent and thus apply an unusually high level of concentrated radiation to the water vapor. The nature of the phenomena which are involved and several specific examples of host and sensitizer materials both for water vapor and for other feedstocks to which it is desired that energy be applied, will be considered in detail in the body of the present specification. In addition to accelerating the generation of hydrogen by the application of high levels of energy to water vapor, instead of by sequestering the oxygen in the course of raising manganese oxide to higher oxidation levels, the present apparatus also permits the direct formation of hydrogen peroxide after the water vapor molecule is broken up, as this is the preferred combinational form of hydrogen and oxygen at the elevated temperatures and pressures which are present in the reaction chamber.

In accordance with a broader aspect of the invention, an improved technique is provided for increasing the efficiency of application of radiant energy to a feedstock. This is accomplished through the use of the heat reservoir including a mass of material heated up to an elevated temperature, and the use of special sensitizer material and host material for absorbing energy from the heat reservoir and for applying energy to the feedsock at precisely those bands in the frequency spectrum at which the feedstock has high absorption to radiant energy. In function, the host material absorbs heat energy from the heat reservoir and applies energy at a specific frequency sufficient to raise the sensitizer material to an excited state. The sensitizer is chosen so that, as it shifts from its excited state to a lower or ground energy state, it radiates energy precisely in the absorption band of the feedstock. By choosing a suitable sensitizer, and exciting it to its upper excitation level, a population inversion of atoms of the sensitizer in the excited state is produced, so that, as certain of these atoms drop to their lower energy states this will trigger coherent radiation from large numbers of these sensitizer atoms with the result that very intense and concentrated radiation impinges on the feedstock precisely at the energy levels to which it is most sensitive. One particular advantage of the present invention is the increased speed and higher efficiency of energy transfer which is achieved by the use of the host and sensitizer materials. In the specific case of the water vapor, for example, it is not necessary to sequester all of the oxygen; instead, many of the water vapor molecules are broken up, and hydrogen peroxide is immediately formed. If desired, additional oxygen may be brought into the reaction chamber along with the water vapor to provide more complete conversion of the water vapor to hydrogen peroxide.

In accordance with an advantageous feature of certain embodiments of the invention, the application of energy derived from the heated reactant to the feedstock may be accomplished with the feedstock in thermally conductive relationship, but isolated from the chamber in which the reactant is located, so that the feedstock may be irradiated continuously, while the reactant is (exothermically) sequestering oxygen from water vapor at a high pressure, and subsequently

dissociating the oxygen at a low pressure. The walls of the pipes or other structure for separating the feedstock from the reactant may include the host/sensitizer material, or may be transparent to the radiations being directed from the adjacent host/sensitizer material to the feedstock.
Other objects, features, and advantages of the invention will become apparent from a consideration of the following detailed description and from the drawings.

Initially, before considering the drawings in detail, the relationship between the subject matter of the present case and that set forth in my prior copending case should be noted in greater detail. Specifically, the main difference between the apparatus of the present invention and that of the prior case is that the special sensitizers and host materials are added in the reaction chambers so as to be directly exposed to the water vapor. Additional oxygen may be supplied to the reaction chamber to facilitate formation of H.sub.2 O.sub.2 in the reaction chamber, and the withdrawal of the H.sub.2 O.sub.2 with H.sub.2 from the reaction chamber.

The following description of FIGS. 1 through 8 of the drawings will closely parallel that set forth in my prior copending U.S. patent application Ser. No. 767,868. The portion of the detailed specification which is more closely related to the new host material and sensitizer material subject matter, and to the matching of the radiation characteristics to the absorption versus frequency characteristic of the feedstock will be found in that portion of the specification involving the description of FIGS. 9 through 13, and particularly FIGS. 10 through 13 in the following description.

DETAILED DESCRIPTION

Turning now to FIG. 1, the system of the present invention is generally designated by the numeral 10 and it comprises reaction chambers 12, 14, 16 and 18, heating means generally designated 20, and a hydrogen and hydrogen peroxide reservoir or accumulator 22. Water enters the system at conduit 24, passes through flow control valve 26 and conduit 28 to manifold 30. Water may then be supplied to heat exchange coil 32 through valve 34 and conduit 36, to heat exchange coil 38 through valve 40 and conduit 42, to heat exchange coil 44 through valve 46 and conduit 48, and to heat exchange coil 50 through valve 52 and conduit 54. It will be seen that conduit 36 is the inlet end of heat exchange coil 32, the outlet of heat exchange coil 32 being conduit 56 which is connected to one end of reaction chamber 12. Similarly, the outlet end of heat exchange coil 38 is conduit 58 connected to one end of reaction chamber 14, the outlet end of heat exchange coil 44 is connected to one end of reaction chamber 16 through conduit 60, and the outlet end of heat exchange coil 50 is connected to one end of reaction chamber 18 through conduit 62.
Vacuum is applied to the system, for purposes which will become apparent as the description proceeds, through conduit 64, flow control valve 66, and conduit 68 which is connected to one end of a conventional gas burner 70. It will be appreciated that heating means 20 comprises burner 70 and heat exchange coils 32, 38, 44, and 50, and their respective conduits and valves. it will also become apparent as the description proceeds, hydrogen and hydrogen peroxide generated in the reaction chambers 12, 14, 16, and 18 passes through conduits 72, 74, 76 and 78, respectively and valves 80, 82, 84 and 86, respectively, to manifold 88. The hydrogen and/or hydrogen peroxide then passes through conduit 90 with check valve 92 to hydrogen accumulator 22 where it is then drawn off for use through conduit 94, flow control valve 96, and conduit

98. Conduit 100, flow control valve 102 and conduit 104 are provided to allow atmospheric air to enter the system when and if needed, as will be described more fully hereinbelow.

Before proceeding further with a description of the system, it should be distinctly understood that while the example given herein for purely illustrative purposes includes four reaction chambers, there is, in fact, no limit other than practical considerations of size and weight as to the number of reaction chambers used. In fact, the invention could be practiced with as few as one reaction chamber and as many reaction chambers as desired, there being no reason why a bank of dozens or even a hundred reaction chambers could not be used. For this reason, applicant is not limiting himself to the use of four reaction chambers except for illustrative purposes. Obviously, one skilled in the art would easily be able to include the necessary valve elements and other hardware if he were adding more reaction chambers.

With the foregoing understood, the description of the instant inventive system will proceed. The system runs at about 900.degree. K or 1000.degree. K and may be pre-heated by any well-known electrical heating means such as that described in the parent application. Alternatively, pre-heating can be accomplished by burning hydrogen in burner 70, the hydrogen being the "tailings" left in one or more of the reaction chambers from a previous run of the system. For this pre-heating cycle, flow control valve 26 is opened to allow water to enter the system filling manifold 30. Valves 34, 40, 46 and 52 remain closed during this cycle. Valves 106, 108, 110 and 112 are opened. Vacuum is applied at conduit 64 with valve 66 opened. Thus, it will be seen that vacuum is applied via conduit 68 to burner 70. Since the other end of burner 70 is connected to conduit 114 which, in turn, is connected to manifold 116, manifold 116 is under vacuum. Then, since valves 106, 108, 110, and 112 are open, the vacuum is applied to reaction chambers 12, 14, 16 and 18, respectively, through conduits 118, 120, 122 and 124, respectively. Thus, any residual hydrogen tailings remaining in any of the reaction chambers is drawn into the inlet end of burner 70 to be burned along with any residual oxygen tailings or with atmospheric air drawn in through conduit 100 and valve 102 by the vacuum which also affects this air line. It should also be noted that in event of a "cold" start where there are no hydrogen tailings to be burned, a combustible gas, such as hydrogen, could be drawn in through conduit 100 and valve 102 to provide the initial start-up heat. The burning of hydrogen in burner 70 provides considerable heat which, by radiation and conduction is passed to the reaction chambers which are filled with reactant 126. When the system is pre-heated to a sufficiently high temperature, we are ready to proceed with the generation of hydrogen and hydrogen peroxide.

Valve 34 is opened to allow a predetermined amount of water to enter heat exchange coil 32 which is, in essence, a steam generator. The water is "flashed" to steam and delivered through conduit 56 to the inlet end of reaction chamber 12. The steam enters reaction chamber 12 containing reactant 126 to fill the total void volume and is constrained in this volume because all outlet valves are closed. The residence time, or reaction time, may be controlled from a few seconds (typically about 2 to about 3 seconds) to a rather long time (typically about 60 seconds), depending on the reactant used, the particulate size, the temperature, and the pressure. Valves 108, 110, and 112 are fully opened to allow the vacuum evacuation of all residual gases in the other reaction chambers and their respective heat exchangers and piping. It should be noted that since a predetermined amount of water was to be passed to heat exchange coil 32, valve 34 was opened for just a brief period and then closed.

Steam having entered and permeated reactant 126 in reaction chamber 12, valve 40 is then opened briefly to allow a metered amount of water into heat exchange coil 38, with the steam generated therein then passing through conduit 58 to reaction chamber 14. Valve 40 is then closed. The steam which passes into reaction chamber 14, as with the steam which had passed into reaction chamber 12, is converted into hydrogen and/or hydrogen peroxide and then held restrained in the reaction chamber for the predetermined control time. In the meantime, valve 80 is opened so that the pressure built up in reaction chamber 12 will force the hydrogen to exit through conduit 72 and valve 80 into manifold 88 and then through check valve 92 into the hydrogen accumulator 22. Valve 80 is then closed and valve 106 is opened to allow the vacuum to empty the residual hydrogen and oxygen tailings from reaction chamber 12 and pass it to burner 70 where the mixture is burned using disproportionated oxygen from reaction chambers 12, 16, and 18 along with additional atmospheric oxygen supplied through conduit 100, if necessary. It should be noted that when valve 80 was opened to pass the hydrogen and/or hydrogen peroxide out of chamber 12, and then vacuum was applied by opening valve 106, the oxidized reactant in chamber 12 disproportionated to release the bound oxygen since the temperature in the reaction chamber remained high and the pressure was lowered.

ith valve 106 still open, valve 82 is also opened to allow the hydrogen and/or hydrogen peroxide generated in reaction chamber 14 to flow into the manifold 88 from which it is directed into the hydrogen reservoir 22. In the meantime, valve 46 had briefly opened to allow a metered amount of water into heat exchange coil 44 and then the steam formed in heat exchange coil 44 passes to the inlet end of reaction chamber 16. At this point, valve 84 is still closed. Valves 106 and 112 are still open to allow vacuum to exhaust chambers 12 and 18. Valve 82 then closes and valve 108 opens along with valves 106 and 112 which are also open. Thus, hydrogen and/or hydrogen peroxide and oxygen tailings are being conveyed through valve 108 to burner 70 for combustion with the combustion gases being exhausted through conduit 68.

Then, valve 84 is opened to pass the hydrogen and/or hydrogen peroxide from reaction chamber 16 to manifold 88. Valves 106 and 108 are opened to allow vacuum to exhaust the respective chambers 12 and 14 while valve 52 has been allowed to briefly open to pass a metered amount of water to heat exchange coil 50 with the steam being formed then passing to reaction chamber 18. The steam in reaction chamber 18 reacts with reactant 126 to form hydrogen and/or hydrogen peroxide which is restrained since valve 86 is still closed. Valves 106, 108 and 110 are all open so that the other reaction chambers are being exhausted.

Valve 88 is then opened to relieve the pressure on reaction chamber 18 and allow the hydrogen and/or hydrogen peroxide to pass to manifold 88. At this point, the whole cycle starts again and valve 14 is briefly opened to allow a metered amount of water to pass to heat exchange coil 32, valve 86 is closed, and valve 112 is opened. The whole cycle then repeats.

While the system of the invention is shown schematically, it will be readily understood by one skilled in the art that it can be easily constructed. The valves are all of a mechanical type which are cam operated so that a precise timed sequence of events can be carried out in a predetermined manner, the timing of the opening and closing of the valves being controlled by the size, shape, configuration and speed at which the cams are moving.

The following "steps" are identifiable in the total reaction cycle involving gases and solids:

(1) Supply of the water vapor (steam) in the direction of flow.

(2) Diffusion of this steam into contact with the particulates of manganese oxides or to the reacting interface which may be on the surface, or inside the particulate, depending on the oxidation level of that particular particulate in the gradient (overall).

(3) Interface reaction (intrinsic rate), including sequestering of oxygen and the release of the gaseous product H.sub.2.

(4) Diffusion of product from the interface.

(5) Removal of product, H.sub.2, in the direction of flow.

(6) Concurrently with Steps 2 - 5, the water vapor is also being directly dissociated by photon action, producing both H.sub.2 and H.sub.2 O.sub.2, as described in detail below.

(7) Diffusion of combined oxygen from the interior of the reactant to the interface, and then away from the reactant in the direction of flow of the H.sub.2 and O.sub.2 residual tailings.

8) Combustion of the H.sub.2 and O.sub.2 tailings in the centrally located burner. (9) Removal of products of combustion from the burner in its separate direction of flow.

The instant process in a process in which a relatively small amount of heat-energy input, (in the form of pre-heat for the reactant) provides conditions for the reactant to effect changes of state, during which a gaseous chemical molecule is completely dissociated into its separate gaseous atoms by two distinct phenomena. In the course of one of these phenomena, the solid reactant concurrently effects a "change of state" by means of an exothermic transformation from one oxidation product level to another oxidation product level; and in the course of the second phenomena, to be described in detail below, the H.sub.2 O molecules are directly dissociated by photon energy, forming H.sub.2 and also H.sub.2 O.sub.2, hydrogen peroxide.

It should also be noted that pressure changes play an important part in the system. Specifically, the reactant is heated to a temperature well above the dissociation temperature for oxygen from the metallic oxide of higher oxidation number at room temperature. This temperature for MnO.sub.2 is given in handbooks as 535.degree. C., and at atmospheric pressure this MnO.sub.2 will dissociate to Mn.sub.2 O.sub.3 at temperatures above 535.degree. C. Accordingly, it is desired to operate at temperatures well above 535.degree. C. such as 600.degree. C. to 950.degree. C. In addition, during the hydrogen formation portion of the cycle, the pressure must be well above atmospheric so that the oxygen will be absorbed by the Mn.sub.2 O.sub.3 (the oxide of lower oxidation number), with a pressure of about at least 75 psi or 100 being preferred, and preferably between 100 psi and 150 psi to as high as 200 psi or more. In addition, during the oxygen disproportionation phase, the free oxygen and other gases are removed from the vicinity of the reactant, preferably by a reduction in pressure to less than atmospheric, with about one-tenth atmosphere being successfully employed. As can be appreciated, by using temperatures and pressures well above and below critical levels during the two phases of the cycle, increased speeds of operation may be obtained.

Reference is now made to FIGS. 2 and 3 wherein the heating means 20 is shown in more detail. Heating means 20, as already discussed, comprises burner 70 and heat exchange coils 32, 38, 44, and 50. Burner 70 comprises casing 128 made of any suitable metallic material lined with a porous fire brick insulation 130 which is carved or otherwise formed to fit casing 128 and has an axial hollow core running longitudinally through most of its length. The hollow core is, in turn, filled with a suitble surface catalyst 132 for "burning" hydrogen and oxygen to form steam. Through the center of heating means 30 is a conventional electrical resistance heating element 140 which is used, when necessary, for pre-heating the system for a cold start. At the lower end of heating means 20 as in the drawings, are atmospheric air inlet 104 and residual tailings inlet 114. At the upper end is exhaust line 68.

The next sub-system under consideration is the reaction chambers 12, 14, 16 and 18. For an understanding of the construction of the reaction chambers, attention is directed to FIG. 4 where a single reaction chamber designated generally as 142 is shown. Reaction chamber 142 comprises an outer casing 144 made of any suitable material such as 3/8inch thick stainless steel or as discussed in the aforementioned co-pending application. It is filled with reactant 126 as discussed above and as shown and described below in connection witn FIGS. 8, 11 and 12. Passing axially through the reactant is a conventional electrical resistance heating element 146, this heater being essentially the same as heater 140 in FIG. 22. This may be used for pre-heat in a cold start. As already discussed, however, the exact means used for pre-heating the system is not critical to the invention and any means well-known in the art for accomplishing this end may be used. The reactant 126, including sensitizer and host materials, is placed in casing 144 leaving a space at each end, these spaces being designated in FIG. 23 as 148 and 150. Spaces 148 and 150 essentially serve the function of surge tanks, manifolds, or the like. Steam inlet 152 and vacuum inlet 154 are provided at one end of reaction chamber 142 and hydrogen outlet 156 is provided at the other end. Steam inlet 152 corresponds to conduit 56, for instance, vacuum outlet 154 corresponds to conduit 118, for instance, and hydrogen outlet 156 corresponds to conduit 72, for instance, in FIG. 1.

Turning now to FIG. 5, the preferred configuration of the apparatus is shown along with the subsystem which includes the valves and driving mechanism for the same as well as the "plumbing". It will be seen that the valves which are described above are arrayed in a single line. The valves are of a conventional type which are operated by pushing or releasing a plunger designated, for convenience of illustration, as 158 in conjunction with valve 34. It will be appreciated that while the description of the valves refers to valve 34 and plunger 158 for exemplary purposes, each of the valves operates in the same manner. A variable speed motor 160 turns a drive shaft 162 which is journaled in mounting plates 164 and 166. Fixedly mounted on drive shaft 162 are cams 168, with one cam corresponding to each of the valves and mounted on drive shaft 162 in such a way as to cooperate with plunger 158 of each valve. Thus, as motor 160 turns drive shaft 162 and, in turn, cams 168, the valves are opened and closed in a manner which is predetermined by the positioning of cams 168. This, of course, will be readily understood by one skilled in the art.

Referring further to FIG. 5, it will be seen that the reaction chambers are set vertically in an enclosure that is square in cross-section and are shown in the drawing with reaction chamber 12 in the front left-hand corner, reaction chamber 14 in the rear left-hand corner, reaction chamber 16 in the front right-hand corner, and reaction chamber 18 in the rear right-hand corner.

Heating means 20 is disposed in the center. The enclosure or, more specifically, inner enclosure 170 is preferably made of magnesium oxide packed in a stainless-steel container. This material was chosen because it distributes heat evenly throughout the volume of the enclosure 170. Surrounding inner enclosure 170 is outer enclosure 172 which is made of any suitable material such as stainless steel and filled with a high quality insulation such as alumina fibers. It will be appreciated by one skilled in the art that any high quality, high temperature, insulating material may be used.

Returning to a consideration of the drawings, FIG. 6 is a block schematic drawing showing in a central position the reaction chamber or chambers 202 and an immediately associated steam generator 204. A reservoir of water 206 supplies water to the steam generator 204, which may be of any of the types described in connection with earlier figures of the drawings. In this connection, it may be noted that all of the arrangements shown in FIG. 6 are applicable to the hydrogen generation apparatus shown hereinabove in the present specification.

Steam or water vapor is supplied to the reaction chamber or chambers 202 through line 208 which may of course be internally connected between the immediately adjacent and thermally connected units 202 and 204. Hydrogen from reaction chamber or chambers 202 may be routed through output line 210 to the venturi tube combining unit 212 which is also in intimate heat-conducting relationship with reaction chamber 202 and the steam generator 204. As mentioned above, in connection with manganese oxide the temperature of the entire assembly, including the venturi unit 212, may be in the order of 600.degree. to 950.degree. C.

Hydrogen peroxide may be formed in either of two ways, and the proportion of hydrogen peroxide to hydrogen gas may be controlled by valves 213 and 215. Initially, considering the formation of H.sub.2 O.sub.2 within the reactor chambers, by photon action, valving 215 would be opened while steam is present in the reaction chambers and while the H.sub.2 gas is being drawn off, and oxygen at high pressure, corresponding to the pressure of the reaction chamber is admitted to chambers 202 via conduit 217 from pump 219.

Now considering the subsequent formation of H.sub.2 O.sub.2, valve 215 would be permanently closed, and valve 213 would be open. When hydrogen starts to flow rapidly through the venturi unit 212 the check valve 214 will open and oxygen will be combined with hydrogen to form hydrogen peroxide. This of course absorbs energy which is available from the exothermic reaction occurring within the reaction chamber 202. The hydrogen and hydrogen peroxide is stored in reservoir 216, which is maintained at a relatively high pressure level by the check valve 218 which prevents loss of hydrogen back toward the reaction chamber 202 between the intermittent withdrawing of hydrogen from the reaction chamber 202. Hydrogen and hydrogen peroxide may be withdrawn as needed from the reservoir 216 through an output line 220. By closing both valve 213 and valving 215, the amount of hydrogen peroxide which is generated is severely limited, and the bulk of the output will be hydrogen, rather than H.sub.2 O.sub.2.

Vacuum pump 221 may be employed to speed up separation of oxygen, hydrogen tailings, and other residual gases from the reactant during dissociation or disproportionation.

With regard to the block diagram of FIG. 6, it is to be understood that the components shown in this figure may be employed in connection with any system described hereinabove in the

present specification. Specifically, the various input and output control valves have been, for the most part, omitted from FIG. 25 for purposes of simplicity. Similarly, the precise physical arrangement, with the units 202, 204 and 212, for example, being in intimate heat-conducting relationship with each other, and insulated from the atmosphere, is not shown in FIG. 25, but may be in accordance with disclosures of other units disclosed in the present specification.
FIG. 7 shows a typical pressure versus time cycle for a system in accordance with the present invention using manganese oxide as the reactant, and four reaction chambers. This is, for example, of the type described hereinabove in connection with FIGS. 1 through 5 of the drawings.

The pressure is "gauge" pressure in pounds per square inch (psi). With this pressure scale, atmospheric pressure is of course indicated by zero. Considering the cycles shown from an overall standpoint, the complete cycle for each reaction chamber including both breaking up the water vapor and dissociating the oxygen from the reactant may be 40 seconds. However, the cycles of the reaction chambers are evenly staggered in operation, by 10 seconds in the example so that hydrogen is generated on a substantially continuous basis. The pressure cycle for reaction chamber No. 1 is shown in the lower characteristic, and the pressure cycle for reaction chamber No. 2 is shown in the upper characteristic. The pressure versus time characteristics for reaction chambers Nos. 3 and 4 are substantially the same as those of chambers No. 1 and 2, but are displaced by additional 10 second intervals.

Now, referring specifically to the lower characteristic 230 in FIG. 7, the cycle starts with the opening of the water inlet valve for a couple of seconds at the beginning of the cycle. Steam is promptly generated and fills the first reaction chamber. At about 6 seconds, the hydrogen outlet output valve is opened as indicated by arrow 232. Hydrogen and/or H.sub.2 O.sub.2 continues to flow until about 16 or 17 seconds of the cycle, when the hydrogen pressure drops to the hydrogen reservoir pressure, indicated as equal to 80 pounds by the dash dot line 234. The closure of the hydrogen reservoir check valve 218, as shown in FIG. 6, is indicated by the arrow 236 in FIG. 7. Soon after the closure of check valve 236 the pressure release and vacuum pump valve is opened, as indicated by arrow 238 and the pressure drops along characteristic 240 to the negative pressure of about one-tenth of an atmosphere indicated by line 242. During the interval from about 20 seconds to 40 seconds the disproportionation phase takes place. Then at approximately 40 seconds the water inlet valve is opened again, and the cycle repeats.

The upper characteristic in FIG. 7 shows the same cycle for reaction chamber No. 2 as described above for reaction chamber No. 1. In the upper characteristic the same reference numerals are employed, but primes are employed in place of the unprimed numbers used in connection with the lower plot of FIG. 7. FIG. 8 is a fragmentary view of a portion of a reaction chamber such as that shown in FIGS. 1 and 4 described hereinabove. In FIG. 8 the outer cylindrical wall 252 may for example be made of 1/4 or 3/8 inch stainless steel. Referring more specifically to FIG. 8, in order to expose the manganese oxide powder fully to the space within reaction chamber 258, this chamber is filled with a large number of hollow stainless steel screen elements which may be formed by taking small strips of stainless steel and folding them over upon themselves and welding or otherwise securing them together to form a hollow enclosed space. The chamber 258 is initially filled with these stainless steel, hollow mesh cells 260. Then a large quantity of manganese oxide is poured into the reaction chambers and is shaken down in among the stainless - steel mesh cells to completely fill the entire chamber 258. In Figure 8 a number of these stainless-steel mesh cells designated 560 are shown, and the manganese oxide powder 262 between the cells is also indicated. It is to be understood, of course, that other techniques may be employed for exposing the reactant to the space within the reaction chamber, but the foregoing system has proved eminently satisfactory in at least one 4-reaction chamber apparatus which has been successfully operated.

In addition, the host and sensitizer material may be included in the fabrication of the wire mesh cells 260. With water vapor within these wire mesh cells, this feedstock is fully exposed to the intense radiation from the sensitizer. FIG. 9 shows an improved structural arrangement of the reaction chambers in which the four reaction chambers 302, 304, 306 and 308 are donut-shaped and are stacked up on top of one another in intimate heat conducting and transferring relationship. Each of the four reaction chambers is provided with two manifolds 310 and 312 to supply gases to the reaction chambers and to remove gases therefrom. These input and output manifolds serve the same functions as the spaces 148 and 150 at the top and bottom of the cylindrical reaction chambers as shown in FIG. 4, for example.

Each of the reaction chambers 302, 304, 306, and 308 contain reactant, such as manganese oxide, and voids created by wire mesh cells as described above, or other structure which will be described below, with which the sensitizer and host materials are associated.

A burner 314 extends through the central opening of all of the four donut-shaped reaction chambers. The burner 314 has the general configuration shown in FIG. 3, but is provided with upper and lower apertured plates 316 and 318 for ease in applying the hydrogen and oxygen to the burner and for ease of withdrawing the burned gaseous products from the unit. Although the details of the burner 314 are not shown, it includes the refractory lining and the granular refractory material such as is shown at 130 and 132, respectively, in FIG. 3.

The unit of FIG. 9 is also provided with heavy upper and lower plates 320 and 322, which are bolted together with a series of bolts 324 spaced around the periphery of the plates 320 and 322. With this arrangement the reaction chambers 302, 304, 306, and 308 are rigidly held together in intimate heat conducting relationship, and can withstand very high pressures even at very high temperatures without deformation of the reaction chambers.

The reaction chamber assembly is mounted on any suitable insulating support as indicated by the blocks 326. A lower metal base 328 and lighter gauge stainless steel metal sidewalls 330 are also provided. High temperature heat insulating ceramic wool encloses the reaction chamber assembly and reduces heat radiation to very low levels. The ceramic wool is indicated by reference numeral 332 in FIG. 9. In passing, it may be noted that the use of flat donut-shaped reaction chambers provides a geometry which is superior to the set of five cylinders shown in FIG. 5, in that the reaction chambers are in more intimate heat conducting association with one another and with the central burner, than in the arrangement of FIG. 5.

Apart from the physical arrangement of the four reaction chambers and the central burner, the "plumbing" and mode of operation of the system as described in connection with FIGS. 1 through 8, remains unchanged. A more detailed consideration of the absorption characteristic of water vapor and other possible feedstocks, and the matching of the host and sensitizer materials to the feedstock absorption characteristic will now be undertaken.

In FIG. 10 the relative transmittance and absorption of water vapor at different wavelengths is shown. By way of example, note that at wavelengths of about 2.5 to 2.6 microns, the curve which represents transmittance has a dip designated 342 in FIG. 10. This is in contrast to the peaks 344 and 346 which are centered just above 2 microns, and in the vicinity of 4 microns, respectively. A combined host material and sensitizer which will provide intense coherent radiation in the vicinity of 2.5 and 2.6 microns, and which absorbs energy in the vicinity of 1.2 to 1.3 microns, will be employed as one set of materials for concentrating energy and applying it to water vapor. The particular host material and sensitizer which provides this wavelength of absorbing heat energy and radiating energy is calcium fluoride CaF.sub.2 as the host material, and uranium-3 as the sensitizer. Before considering FIGS. 11 and 12 some background relative to the phenomena which are taking place will now be included. Initially, it may be noted that the theory of Masers and Lasers of course forms a background for the present invention. The word "LASER" is an acronym which stands for the Light Amplification by the Stimulated Emission of Radiation. Although related to some extent to Maser and Laser theory, the present invention does not involve the intense collimated beams of energy characteristic of Masers and Lasers; and of course, Masers and Lasers do not derive their energy from a heat reservoir made up of a body of material at elevated temperatures. Types of Radiation

There are two separate processes by which a material can become a generator (or producer) of radiation energy after absorbing suitable quantities of primary energy. In the first process the absorbed energy is converted (degraded) into a low-quantum-energy heat that diffuses through the material which then emits radiation called thermal radiation. In the second process an appreciable part of the absorbed energy is temporarily localized as relatively high-quantum-energy excitation of atoms or small groups of atoms which then emit radiation called luminescense radiation.

Specifically, "luminescence" is a process whereby matter generates nonthermal radiation which is characteristic of the materials involved and not the temperatures. Sometimes, however, the radiation as generated is also called "luminescence". It is in fact luminescence only when the radiated energy is in excess of the thermal radiation produced by heat.

Thermal radiation from solids is generally a broad continuous spectrum of radiation, especially infrared, which is emitted in increasing amount as the temperature of the solid is increased.

he quality and quantity of thermal radiation depend almost exclusively on the temperature rather than the nature of the emitting solid material. Broadly and objectively speaking, luminescence describes emission of radiation (of subatomic origin) in excess of thermal radiation; that is, luminescence yields photon emission in excess of the photon emission produced entirely by thermal agitation. Luminescence is generally excited by primary photons or charged material particles having individual energies ranging from about 2 ev to over 10.sup.6 ev and affords emitted photons with energies in excess of 1 ev. When luminescence is excited by energy liberated during chemical reactions, the liberated energy per emitting atom or molecule usually exceeds 1 ev. These excitation energies are hundreds to millions of times greater than the energies of individual phonons in solids. A single phonon can increase the energy of an electron or atom in a solid by at most a few hundredths of an electron volt, whereas the individual primary particles normally used to excite luminescence can provide energy increases up to the total amount of energy carried by the primary particle (except for rest-mass energy), that is, tens to millions of electron volts. In order to obtain barely visible emissions of thermal radiation from a solid, the temperature of the solid must be raised above 900.degree. K. to obtain an appreciable probability of getting 1.7 ev (or greater) electronic excitations by the cumulative action of phonons.

The thermal radiations from real solids cannot exceed the emission which would be obtained from a perfect black body at the given temperature and frequency. Most solids emit somewhat less thermal radiation than the maximum which is expressed by: The peak wavelength .lambda.pk of the broad emission band of black body radiation is inversely proportional to T, according to WIEN'S displacement. the TOTAL THERMAL EMISSIVE POWER P.sub.T of a perfect black body increases as T.sup.4, according to the STEFAN-BOLTZMANN LAW:

At room temperature (about 200.degree. K.), .lambda.pk is in the far infrared at 97,000 A, and P.sub.T is only 4.6 .times. 10.sup.5 erg cm.sup.-2 sec -1, so that there is not an appreciable amount of radiation in the VISIBLE region between 4000 and 7000 A.
At the temperature of an incandescent lamp filament (about 2800.degree. K.), .lambda.pk is about 10,000 A, and P. sub. T is 3.5 .times. 10.sup.9 erg cm .sup.-2 sec.sup.-1, so that there is an appreciable emission in the visible part of the spectrum. In the temperature range between about 700.degree. and 1000.degree. K. there is an overlapping of feeble luminiscence and feeble incandescence.
The present invention involves temperatures from a lower limit of about 900.degree. to 1000.degree. Kelvin or about 600.degree. to 700.degree. Centigrade and ranges upward from these temperatures with the upper limit controlled only by the strengths of the materials utilized (1) as the reactant or host/sensitizer, (2) for the reaction chamber, and (3) for the tanks, tubing, etc.

The Haser Concept

The Maser/Laser type of acronym may also be applied to another system termed "Haser", an acronym for "Heat Amplification by Stimulated Emission of Radiation." As will be developed below, however, the term "Amplification" is not used in the sense of increasing signal strength, but in the sense of amplifying the effectiveness of heat energy. The Haser application depends not as much on coherence or monochromaticity per se, but rather on the unprecedented energy per unit area. This radiated energy is a by-product of the coherence of the radiation, and can be many orders of magnitude greater in energy than normal incoherent thermal radiation. To understand why this is possible, it is necessary to review briefly a few of the basic differences between the incoherent radiation produced by an ordinary bright source and the coherent light (radiation) produced by a laser or maser.

In a conventional source the atoms of a solid (or a gas) are agitated either thermally or electrically to higher energy states. When these atoms return spontaneously to their lower levels, they radiate some of their excess energy as light. Since each atom behaves independently at this state, its emission is at a random time and in a random direction with a random polarization.

It follows that the light radiated in a single direction is the complex sum of all the light from the individual atoms. The phases of any two atoms will tend to cancel their radiation in some directions and enhance it in others. The total energy of the source will on the average be radiated uniformly in all accessible directions, and the amount of energy observed in a given direction will be proportional to the solid angle subtended by the observing device. In the Haser interior the observing device is either a water-vapor molecule (or other feedstock) or another particulate of reactant.

The maximum total energy that can be radiated by a given source depends on two factors: the surface area of the source and the maximum temperature to which the source has been heated. Therefore, in practice, the only way to increase the power output from an ordinary source beyond the limitations imposed by the source material is to increase the surface area of the source.

Power output, however, is only half the solution. Concentrated power is much more important than power itself. A 40-watt fluorescent lamp, for example, produces more light than a 40-watt incandescent lamp, but the fluorescent lamp is not nearly as effective as the incandescent light source for a spotlight.

Now, in a laser or maser, the energy is also emitted when atoms drop from a higher energy level to a lower one; however, in this case the atoms are triggered and emit radiation (to a large percentage) in unison. In the case of the Haser, the atoms are triggered to emit radiation in unison by phonon/photon waves within the unit cavity or cell interior. Enough of the energy previously generated is retained within the mass of particulates to maintain emission in compatible phase, polarization and direction. This phonon wave interacts with the excited atoms and causes them (to a large degree) to emit their excess energy in phase with the stimulating wave before they have a chance to do it randomly.

As a result, the Haser generates a good percentage of its radiated energy so that it travels in synchronism with the standing phonon waves, therefore concentrating the energy emitted as photons.

In effect, the radiated photons from the Haser particulates are all relatively concentrated, monochromatic, and therefore, relatively coherent energy sources. This results in an excellent energy density even though the photons are traveling in practically an infinite number of directions, due to the fact that the particulate sources number in hundreds of millions. The photons moving from particulate to particulate impact and are absorbed by other particulates. Then, this STORAGE, BUILD-UP, AND RELEASE of the "phase and amplitude of radiated energy," combined with the fine particulate geometry of the Haser power (energy) source, which provides surface area to emit photons in extremes, allows a "maximum efficiency utilization" of the radiated energy within the Haser cavity.

The act of controlling the spectral emissions to most effectively dissociate (for example) water vapor, by sensitizing the host compound properly is another very important point. The monochromatic waves may become distorted in passing through substances, so that harmonic waves are generated at two or more times their original frequency.

Infrared wavelengths may be converted into visible light, and visible light into ultraviolet waves. This new system utilizes fine (small) particulates of solids comprised of oxides which are predetermined by design within which some of the host atoms are replaced by other frequency sensitive atoms also predetermined by design, which, provide stimulated absorption and emission at predetermined wavelengths.

An ohmic (or other) pre-heat provides to the heat reservoir mass the original energy to liberate a massive volume of photons at the frequency range which will activate the sensitive atoms included in the host compound; the fine multi-faceted particulates absorb the photons which normally proceed as phonons through the particulate to generate and provide large numbers of cavity resonances which stimulates emission with each internal excursion; therefore, again, the gain by this regenerative amplifier when driven by the thermal noise fluctuations from the cavity walls, can be significant.

In the case of the HASER, the principle emissions of radiation designed and produced to dissociate the chemical product may be emitted from the woven wire mesh cavity balls or cells 260 (FIG. 8) that fill the entire Haser cavity.

The "preheat" energy can be electrical and inserted (through resistance heaters) into the internal cavity or the heaters may also be external to the cavity and heat the mass by conduction and radiation through solids. Also, the "preheat" energy may be inserted by combusting suitable fuels such as hydrogen, peroxide, alcohol, and other hydrocarbons, directly in the internal cavity of the unit or within a "center-core" burning unit as is designed into the unit of FIG. 9, for example.

As the reactive mass reaches temperature levels which excite the molecules and atoms to a radiating level of energy, phonons and photons evolve which distribute the thermal energy within the mass. Incidentally, relative to the use of the terms "photon" and "phonon", when a photon traveling through space impinges on a solid, the resultant wave in the solid is termed a "phonon".

The ability of `atoms` to store energy has to do with the electrons within the individual atoms. The electrons exist as a cloud of negative charge around the positively charged nucleus. Each election occupies a state of energy and angular momentum that cannot be occupied by any other election. Therefore, the electrons tend to fill stable shells surrounding the nucleus.

The electrons of the outermost shell are the ones most easily affected by outside forces because of their accessibility. These outer electrons can be moved to higher energy states, but they always tend to return to their lowest energy state: the ground state. Electrons at certain levels decay (fall to a lower state) more easily than electrons at other levels.

Each excited electronic state of the atom has a characteristic lifetime that indicates the average time it takes an electron to fall to a lower level and therefore radiate a photon. Most excited states have lifetimes of about 10.sup.-8 second.

There are some excited states or levels in all atoms in which the electron cannot decay easily by giving up a photon. Such atoms must therefore wait for other means of giving up their energy, such as colliding with other atoms or with the walls of the system. Electrons in this state of energy tend to stay there for relatively long periods of time (0.001 second or more), and are referred to as being in metastable states. This is an important part of the storing of energy, which can then be retrieved in the excitation process by stimulation.

The normal radiative decay from a higher electronic state to a lower one is termed spontaneous emission. As discussed earlier, processes exist that can force an atomic electron to a higher state or stimulate it to jump to a lower state. An example of forcing, as discussed earlier, is provided when a photon collides with an atom and excites the outer electron to a higher level, which can happen when the energy or wavelength of the photon corresponds exactly to the difference in energy between the state the electron is in and some higher possible state. This process is known as absorption because the photon (energy) is actually absorbed by the atom and all the photon's energy goes into raising the electron to a higher state.

Similarly, as discussed earlier, the stimulated electron can move to a lower level, provided that such a level exists and that the difference between the two levels corresponds to the energy of the incoming photon exactly. The energy given up by the electron in jumping to a lower state goes into creating an additional photon with the same characteristics as the colliding photon.
A large number of atoms can provide an increase in the radiated energy at the desired frequency or energy level, if the population of electrons in the excited states of the atoms is suitably arranged. Consider two excited levels of a system of identical atoms with the electrons divided between the upper and lower levels. If a radiated photon having a wavelength corresponding to the difference in energy between the two levels is allowed to pass through the system medium, it will be amplified if there are more atoms with electrons in the upper state and absorbed if there are more atoms with electrons in the lower state. The condition of having more atoms in the upper state is called a "population inversion" (because it goes against the normal processes of nature, which tend to keep more electrons at lower energies than at higher energies).

The search for new Haser "systems" is therefore not easy, because one is working against the natural tendencies of the electrons.

Another important consideration is the actual \`lifetimes\` of the ion energy levels of the impurity atoms involved in the population inversion. The upper level of a two-level system with a population inversion radiates energy corresponding exactly to the difference between the two levels.

The electrons that have thus yielded energy by radiation, end up at the lower level. If they remained there, the situation would result wherein there would be more atoms at the lower level than at the upper level, and as discussed earlier, there would be absorption instead of gain. For continuous operation, one must find impurity atoms with combinations of levels such that the lower level has a short lifetime and the upper level is preferentially populated. This necessity rules out the ion ground state as a possible Haser level, since all ion ground states are metastable. The pair (or more) of ion energy levels which will provide amplification must be energetically above the ground state but still below the metastable states.

Although the original gas laser utilized electrical excitation of electronic transitions, later versions use vibrational transistions in molecules such as carbon dioxide, and the excitation mechanism may involve electrical or chemical excitation, or the burning of fuel. In the chemical laser, atomic species such as hydrogen and fluorine can be reacted to produce molecules in an excited vibrational state which in turn yields amplification or oscillation.

An entirely new excitation process was announced by Garry in 1970. In this, the gas dynamic laser, an appropriate fuel is burned to produce carbon dioxide and nitrogen at high temperature and pressure. When released through a nozzle into the optical resonator region, the gas cools rapidly in terms of its kinetic or translational energy, but the population of the vibrational energy levels of the carbon dioxide molecules becomes inverted since the lower level of the laser transition relaxes more rapidly. In addition, the vibrationally excited nitrogen molecules are in near resonance with the upper laser state of the carbon dioxide and transfer energy with high efficiency to maintain the inversion. This type of `laser` has produced continuous powers as high as 60 kw.

The HASER phenomenon as utilized in the present invention, actually uses a thermochemical excitation mechanism. The original preheat energy prepares the reactant material within the reaction chamber by bringing the material to photon emitting temperatures.

When water vapor is introduced into the chambers of FIGS. 1 and 8, for example, the excited billions of photons emitted and traveling between particulates, strikes the sensitized "Cavities" with a barrage of photons designed to provide frequency, amplitude, and steric factor impact adequate to dissociate the H.sub.2 O molecules. On dissociation, the 2H.sub.2, and O.sub.2 molecules are vibrating at very high temperatures and pressures which are compatible with recombining these molecules through the "activated complex" mechanism into their (high temperature) preferential H.sub.2 O.sub.2 + H.sub.2 molecules, which incidentally evolves more than 33 KCal/mole heat energy. As the steam enters and traverses the cavity, an amount of the steam (depending upon the design of the contents of the reactor chamber and the relative amount of reactant, manganese oxide or other similar metal oxide, and the host/sensitizer material), combines with the reactant, which raises the oxidation level through the process of oxidation; and this of course, evolves heat energy (because this is an exothermic reaction), which, broadcasts more photons of energy throughout the cavity interior, to react with the sensitizers and activators; and this in turn creates massive amounts of new photons of energy to dissociate the H.sub.2 O vapor and maintain the reaction temperatures within the host materials.

Haser Cavities

Referring again to FIG. 8, the cavities 260 can be fabricated of very fine mesh woven wire, which is cut into small sections, stamped, folded, and the outer edges of the wire mesh are secured together to form a hollow cell. The wire, of a diameter approximately equal to 0.002 inch, is made up of the elements, compounds, and a metal carrier (inert to the process), and is initially woven and formed into the cells as described above. It is then transformed into the desired host and sensitizer materials through oxidation in an atmospherically controlled furnace or kiln. Ceramic Haser Tubes Instead of the wire mesh cells 260 as shown in FIG. 8, the preferred form of Haser cavity is shown in FIG. 11 in which a large number of ceramic tubes 352 are present. These tubes are preferably extruded from mullite, which is a common clay having the approximate chemical structure of 2Al.sub.2 O.sub.3 . SiO.sub.2 with a range to 3Al.sub.2 O.sub.3 . 2SiO.sub.2. Suitable quantities of host and sensitizer materials, as described below, are added to, and thoroughly mixed with the mullite prior to extrusion. Subsequent to extrusion the tubes are fired in a suitable kiln or furnace. The tubes may suitably have a diameter of about 1/4 inch or 1/2 inch and be from 1 to 12 inches in length. The sidewalls may suitably be from 1/32 to 1/16 of an inch in thickness, but none of the foregoing dimensions are critical. After firing, the tubes 352 are provided with filters 354 in both ends. The filters may be of any suitable structure, for example, several layers of metal gauze, to prevent the intrusion of the reactant 356 which may, for example, be manganese oxide. In practice the ceramic tubes 352 with their associated filters 354 may be initially placed in one of the reaction chambers such as reaction chamber 302, 304, 306, and 308 of FIG. 9, or the chambers 126 of FIG.1; and then powdered metallic manganese or manganese oxide may be poured in and the entire unit vibrated until the manganese oxide 356 as shown in FIG. 11 fills all the space around the ceramic tubes 352. With this arrangement, of course, the water vapor is present within all of the ceramic tubes 352; heat is provided by the manganese oxide 356; and radiation from the host/sensitizer combination forming part of the ceramic walls 352 radiates intense coherent energy in one or more of the absorption bands of water vapor; and this intense radiation serves to dissociate the hydrogen and oxygen atoms making up the water vapor molecule. The foregoing action is shown diagrammatically in FIG. 12 in which the tube 352 is shown centrally located and the surrounding particles of manganese oxide 356 are shown radiating broad spectrum thermal radiation 358 in all directions including into the ceramic tube 352. The water vapor particles 360 shown as small circles within the tube 352 may be directly impacted by the coherent radiation 362 which is emitted by the host/sensitizer combination included in the walls of ceramic tubes 352. It may be noted, that for convenience in illustration, the manganese oxide particles are shown spaced apart in FIG. 12; however, in practice they would be filling all of the space within the reaction chambers which is not filled with the ceramic tubes 352. Host/Sensitizers for Water Vapor Feedstock In the tabulation which will be set forth below, suitable host materials and sensitizers for applying radiation to water vapor will be set forth. In this tabulation the chemical symbols for the elements will be employed, and the host material will be listed first followed by the sensitizer material. In each case the absorption band for the host material will initially be given and then the emission wavelength of the sensitizer will be set forth. Following the tabulation, the absorption characteristic of water vapor as shown in FIG. 10 will be reviewed and the relationship of the emission lines of the sensitizers to the absorption bands of the water vapor will be discussed.

(a) Ca WO.sub.4 : Nd.sup.3+ Where Absorption =0.74 microns-0.76 microns Ca,(Calcium) Emission =1.065 microns W,(Tungsten) Nd,(Neodymium) (b) Ca WO.sub.4 : Nd.sup.3+ Absorption =0.87 microns-0.89 microns (Same) Emission =1.3372 microns (c) Y.sub.3 Al.sub.5 O.sub.12 : Er.sup.3+ Where Absorption =0.46 microns-0.47 microns Y,(Yttrium) Emission =1.6602 microns Al,(Aluminum) Er,(Erbium) (d) Y.sub.3 Al.sub.5 O.sub.12 : Er.sup..sup.3+ Absorption=0.52 microns-0.54 microns (Same) (e) CaF.sub.2 : U.sup.3+ Where Absorption =1.2 microns-1.3 microns Ca,(Calcium) Emission =2.5111 microns-2.613 F,(Fluorine) microns U,(Uranium)

In the foregoing tabulation it may be noted that there are only three separate combinations of host and sensitizer materials which are being employed. More specifically, the combination of calcium tungstate and neodymium produce output radiations both at 1.065 microns and also at 1.3372 microns as set forth in examples (a) and (b). It may be noted that the absorption wavelengths for the two output emissions differ correspondingly. The combination tabulated in examples (c) and (d) set forth above include yttrium aluminum oxide as the host material and erbium as the sensitizer. In this case, the emitted radiation for both (c) and (d) is at 1.6602 microns; however, the absorption for the two examples is at different frequencies. The final example (e) using calcium fluoride as the host material and uranium-3 as the sensitizer was mentioned above. With regard to the matching of the emitted radiation from the sensitizers with the absorption bands shown in FIG. 10 for water vapor as a feedstock, the high absorption band for water vapor extending from about 2.4 microns to about 3.1 microns is well located to receive emitted energy in the 2.5 microns to 2.6 micron wavelength region from example (e) tabulated above. With regard to examples (a) through (d), a cursory review of the emission wavelengths and the corresponding moderately sharp absorption bands between 1 and 2 microns would indicate that there is not necessarily an exact correspondence. However, it has been determined that there is a certain amount of broadening of the radiation and of the absorption characteristics which occurs at high temperatures; accordingly, with the basic location of the emission lines and the absorption points as indicated in the above table and in FIG. 10, the practical result is good coupling from the emitted radiation to the water vapor molecules at the 1,000.degree. Kelvin temperature at which the system is operative.

With regard to the relative quantities of the host and sensitizer material in the mullite, the quantity of host material should be approximately 25 to 1,000 times greater than the amount of associated sensitizer material. A ratio of approximately 0.5% of sensitizer of the amount of host material is the general order of magnitude which should be employed. In addition, the quantity of each particular category of host and sensitizer material such as those set forth in the tabulation of combinations (a) through (e) set forth above, should be proportioned to the absorption bands of the feedstock which is being irradiated. Thus, in the particular example under consideration, where the host/sensitizer combination (e) using calcium fluoride and uranium-3, is matched to a broad absorption band of water vapor, a larger quantity of this host/sensitizer combination should be employed as compared with combination (a), (b) and combination (c), (d). Thus, in making of the ceramic tubes, the material which is being prepared might include approximately 88% by weight of mullite, 8% by weight of the host/sensitizer combination (e), and 2% by weight of each of host/sensitizer combinations (a), (b) and (c), (d). Similarly, in the event that the wire mesh is employed, the host sensitizer/sensitizer combinations may be added in the same proportions to stainless steel wire and the combination material drawn into wires and formed into mesh. Alternatively, after the preparation of the stainless -steel wire cells, mullite together with the host sensitizer combinations could be applied in several bands in the plastic state around the stainless steel wire mesh cells, and then fired, to produce the desired result. This result, as mentioned above, involves the provision of spaces throughout a body of material constituting a heat reservoir, and locating host/sensitizer combinations around the boundaries of these spaces or voids in the material. The chemical formula for mullite was given above, and it is again noted that mullite includes aluminum oxide Al.sub.2 O.sub.3 and silicon dioxide SiO.sub.2 in certain proportions noted above. In order to enhance the "HASER" action and increase the energization of the host/sensitizer combinations (a) through (e) set forth above, a material such as chromium, which acts as a sensitizer in cooperation with the aluminum oxide in mullite which acts as the host material. The chromium-aluminum oxide, sensitizer-host combination produces strong output radiation at a number of wavelengths, including output radiation centered at 0.6934 microns, when the Al.sub.2 O.sub.3 is absorbing energy at 0.5 microns, The radiation centered at 0.6934 is broadened at the high operating conditions so that the radiation extends from 0.6 or 0.65 to 0.75 or 0.8 microns, thus providing supplemental input energy to example (a) set forth hereinabove, which involves absorption at about 0.74 to 0.76 microns. The Al.sub.2 O.sub.3 /Cr combination may also directly apply energy to the feedstock when the output radiation is of the proper frequency and may also pump other host/sensitizer combinations. When chromium is used it will be present in quantities in the order of five per cent by weight or less of the mullite employed as the basic material of the tubes 352 as shown in FIGS.

11 and 12. Material Requirements The primary requirements for potential solid-state Maser/Haser materials are, first, that the composition should fluoresce with a suitably high intensity at elevated temperatures by means of thermal energy alone and, second, that the matrix should be transparent or has no absorption transition at the operation frequency; it should also be chemically stable and have no caustic characteristic. Preferably, the terminal level of the Haser transition of the active ion should be far enough above the ground state so that three or four-level operation is possible and at elevated temperatures. The lifetime of the metastable level from which the Haser transition originates should be, insofar as possible, equal to the lifetime for spontaneous emission with no constraints imposed by competitive dissipation to the matrix. In four-level operation the lifetime of the terminal level of the transition must be smaller than that of the metastable level; otherwise, a suitable excess population in the upper level cannot be maintained. This condition is generally obtained when the terminal level lies in the phonon absorption region, preferably between 6000 and 19,000 cm.sup.-1. In addition, it is helpful for the excited active ion to be unable to absorb photons corresponding in energy to the Haser transition. Where such absorption into a higher level or band is possible, the photon/phonon flux in the particulate cavity is reduced and the metastable level depleted. For best coherence the active ions should occupy equivalent positions in the host structure, so that there will not be a multiplicity of spectra. When these ions are in completely unique sites, the emission spectrum has the minimum detail and line width consistent with the site symmetry, the crystal field, and the active-ion concentration. In general, the higher the site symmetry the more degenerate the electronic states of the active ion. Therefore, fewer distinct transitions should be observed in fluorescence and, on the average, each emission transition should fluoresce a greater portion of the absorbed energy. However, there are also fewer distinct absorption transitions, and certain emission transitions may be favored in a low-symmetry environment. As long as the emission transitions are few in number, the low symmetry environment may prove to be advantageous by virtue of a broader absorption coverage. Different classes of active ions seldom find optimum environments in the same host structure. Different activator ions are best accommodated in oxides or fluorides, where the cations of the matrix are approximately equal in size to the activator. Al.sub.2 O.sub.3, MgO, MgFl.sub.2, and ZnF.sub.2 are typical matrices for transition-metal ions, CaF.sub.2 is particularly useful for divalent rare-earth ions, and CaWO.sub.4, LaF.sub.3, and Y.sub.2 O.sub.3 are best suited for trivalent rare-earth ions for lasers. Y.sub.3 Al.sub.5 O.sub.12 can readily accommodate both trivalent rare-earth ions and trivalent 3d transition-metal ions. Certain crystals have conveniently disposed matrix absorption bands and these can be used to absorb pumped radiation over a broad spectrum.

The excitation may be subsequently transferred to trivalent rare-earth ions contained in the matrix and therefore, greatly enhance the overall efficiency of fluorescence. It probably is essential to move into the visible region, to obtain continuous operation for molybdates or niobates.

In comparison, materials which have their matrix absorption edges well above the excitation range but absorb strongly as a result of the active ions having strong absorption bands of their own, together with narrow emission lines, can afford very favorable pumping conditions. Ions such as, Cr.sup.3+, Chromium, and, Dy.sup.2+, Dysprosium offer this advantage.

The past decade has provided rapid extension of spectral measurements and theoretical analysis, such that the properties of most of the divalent and trivalent activator species are well understood. The interest in solid-state masers and lasers, has motivated the preparation of various crystals containing divalent rare-earth ion species and the extensive study of their infrared characteristics. Parallel studies of the infrared properties of the transition-metal ions and trivalent rare-earth ions have been equally productive. The selection of materials for Hasers which will operate in the infrared region depends on the disposition of the vibrational bands in the matrices. Because vibrational levels may drain an electronic state, they should not be too close below the metastable level, or the latter should lie below the vibrational levels in energy. Suitable coupled pairs which provide a mutual cross relacation can also be used advantagously to minimize loss of efficiency due to fluorescence from levels lying higher than the metastable level of interest and loss to the phonon spectrum. It is also desirable to increase the efficiencies of masers that terminate on phonon levels. This mechanism of operation offers the possibility of a maser that can be tuned over a broad range of frequencies. Preferred Lattices Oxygen-dominated compounds are those in which oxygen is a major chemical constituent of the host lattice. They may be classified according to their chemical composition into four groups. The first group, comprising the simplest compounds, has the generic formula M.sub.x O.sub.y, representative numbers being the alkaline earth oxides and Al.sub.2 O.sub.3, Y.sub.2 O.sub.3, and ThO.sub.2, with Cr.sup.3+, Mn.sup.2+, and the rare earths as common activators. Other compounds included in the generic formula are CuO, and ZnS and the other II-VI wide-band-gap compounds. The second and largest group are the binary oxides, M.sub.x A.sub.y O.sub.z, where M is any element of Group II, A or B, and Period 2 to 6, and A is Ti, Zr, V, Nb, Mo, B, Al, Si, Ge, P, As, Sb, or S. n many cases x = 4y, the oxygens nearly tetrahedrally arranged around the multivalent atom, A. The common activators are Mn.sup.2+, Mn.sup.4+, Ag.sup.+, Sn.sup.2+, Tl.sup.+, Pb.sup.2+, and the rare earths. Included in this group also are the well-known self-activated compounds comprised of tungstates and molybdates, which are commonly called scheelites (although some do not have the scheelite structure). These require no activating impurity, because the energy transitions take place within the anion, although impurity-activated luminescence is also observed. Of the impurity-activated members of the binary oxides, the borates, phosphates and silicates are the most numerous. Ternary systems, M.sub.x A.sub.y B.sub.y O.sub.z, constitute the third category. M and A and B are the elements listed in the binary systems plus the alkali metals.

The most common activators, other than the rare earths, are those listed with the binary oxides. There are a few ternary compounds not containing tungsten or molybdenum which are believed to be self-activated. There are many other oxygen-containing inorganic luminescent solids, including a large number of rare-earth salts and impurity-activated nitrites, carbonates, etc. The work on the latter is largely incomplete. The work on the rare-earth salts constitutes a well-studied separate discipline (Diecke et al, 1961). onsidering the small number of possible combinations of simple oxides and activators, it is surprising that new prospects in this group continue to be found. New compounds, however, consisting of oxides of antimony, germanium, thorium, calcium, strontium, yttrium, and gadolinium with various activators have been developed over the last few years. The valence of manganese in phosphors or compounds is interesting because of its use as an activator in many lattices. Kroger (1948) showed that the broad structureless red or green emission spectra of manganese-activated compounds is generally due to Mn.sup.2+, whereas the red narrow-banded emission is due to Mn.sup.4+.

SUMMARY

In the same way that the spectroscopy of atoms provided basic information on atomic structure, careful study of controlled luminescence of solids provide information on band structures and energy levels of impurities and imperfections. In some cases, the spectra of impurities yield, through the application of crystal field theory, information on the symmetry and strength of the crystal field at the impurity site. The absorption or excitation spectra involve electronic states of the system with equilibrium nuclear coordinates characteristic of the ground state; luminescent emission spectra involves electronic states with the equilibrium nuclear coordinates of the emitting state. additionally, detailed theoretical knowledge of band structure and of impurities and imperfections obtained from semiconductor and photoconductor research provides understanding of the luminescence of these materials. Luminescence is generally investigated as a steady-state phenomenon, wherein the compound interacts with the excitation source and emits radiated energy continuously. The thermodynamic parameters of the compound remain time independent at every point in the system, despite the occurrence of excitation, emission, and dissipative processes. Irreversible thermodynamics is concerned with just such open systems, which interact with their environment in a stationary way. It is a principle of irreversible thermodynamics that the entropy production is positive in every macroscopic region of the system undergoing irreversible processes. Macroscopic regions refer to regions large enough for microscopic fluctuations to exist but small enough for approximate equilibrium to exist within each region. We are especially interested in the more complex excitation mechanisms involving energy transfer between different macroscopic regions not in equilibrium with each other. Light Absorption and Color An electromatic radiation, (such as radiowave, light, and X-ray) can be characterized by its particular wavelength, LAMBDA, .lambda. (measured in cm or A), or by its wave number, .sup.NU, .nu. (the reciprocal of the wavelength, .nu. = 1/.lambda., commonly expressed in reciprocal centimeters, cm.sup.-1. Each unit of radiation (a photon) corresponds to a quantum of radiant energy, E, which is directly proportional to the wave number, .nu.. Since chemical calculations are founded on a mole basis, in discussing the relationship between radiant energy and chemical processes (responsive activators and hosts) it is convenient to express radiant energy in kcal/mole of photons. We can do so with this accepted relationship: the radiant energy in 1 mole of photons, with .nu. = 350 cm.sup.-1, is equal to 1 kcal. herefore, we can obtain the energy (expressed in kcal/mole) for photons of a given wave number simply by multiplying the value of .nu. expressed in cm.sup.-1 by the conversion factor (1 kcal/mole of photons)/350 cm.sup.-1. or example, the energy of light photons with .nu. = 20,000 cm.sup.-1 is: ##EQU1## and the energy of a single photon of .nu. = 20,000 cm.sup.-1 is: ##EQU2##

The wave number, and the energy, of electromagnetic radiations varies within an extremely wide range -- .nu. = 10.sup.14 cm.sup.-1 for the .gamma.-rays emitted in nuclear reactions to .nu. = 10.sup.-6 cm.sup.-1 for radiowaves. In between these two extremes, there is a continuum of radiations of intermediate wave numbers -- the "visible region", which extends approximately from 27,000 cm.sup.-1 to 13,500 cm.sup.-1. In general, when white light strikes a substance, part of the light is absorbed and part is transmitted (if the substance is transparent) or part is reflected (if the substance is opaque). A substance may absorb preferentially the light photons of one (or more) region(s) of the spectrum, so that the transmitted light or the reflected light is relatively richer in the radiations of the remaining regions. The combined effect of these remaining radiations is observed as a particular color (when it is in the visible spectrum). For example, a substance that, when exposed to white light, absorbs almost all photons in the entire yellow - to - violet region (say from 17,000 to 27,000 cm.sup.-1) will "appear red", because only the radiations in the red region of the spectrum (13,500 to about 17,000 cm.sup.-1), which are not absorbed, remain to be observed. Similarly, a substance that "appears yellow" absorbs photons of both the green-to-violet region (from 19,000 cm.sup.-1 to 27,000 cm.sup.-1) and the red region (from 13,500 to 16,000 cm.sup.-1) of the visible spectrum. ince light (radiation) is energy, the absorption of radiation is absorption of energy; it is well known, that, if a substance absorbs light, the corresponding absorbed energy may be used to promote certain atoms, ions, or molecules of a substance from "ground-state" to an "excited state". For example, an atom, ion, or molecule which absorbs a photon of a given wave number takes on a `quantun` of energy that may serve to promote one electron from a lower energy orbital to a higher (available) energy orbital. In general, different electronic transitions involve the absorption of different quanta of energy.

SPECIFIC EXAMPLES

Some underlying principles involved in the selection of Haser systems have been set out hereinabove and a preferred embodiment has been described which involves water vapor as a feedstock and the generation of hydrogen and/or hydrogen peroxide. It is to be understood that the Haser concept is not limited to the specific embodiment described herein but has more general applicability in the conversion of broad spectrum heat energy or radiation to particular frequencies which lie within the absorption band or bands of any selected feedstock. The feedstock may be gaseous or liquid or even a slurry, and may be brought into proximity with the heat reservoir and associated host and sensitizer material in any desired and practical manner. The heat in the heat reservoir may be generated in any suitable manner including the use of the exothermic reactor for generating hydrogen and hydrogen peroxide and/or the combustion of the hydrogen and hydrogen peroxide. The feedstock may for example be directed through the heat reservoir by a pipe suitable coiled to provide for adequate exposure to the radiation. The pipe may be transparent to the radiation being applied to the feedstock; or alternatively, the pipe may be made of material containing the specially selected host and sensitizer material.

In the following examples, a number of reactions are set forth and these are followed by an identification of a host and sensitizer material which will concentrate the broader spectrum heat energy to one of the absorption bands of the feedstock. Incidentally, in the following examples, in addition to the standard symbols for the elements, the following abbreviations are used: Et for ethyl, C.sub.2 H.sub.5 ; Ph for phenyl; C.sub.6 H.sub.5 ; Pr for propyl, C.sub.3 H.sub.7 ; and Bu for butyl, C.sub.4 H.sub.9. In addition to the host and sensitizers shown in each of the following examples, Al.sub.2 O.sub.3 in mullite and Cr +3 may advantageously be used (absorption at 0.5 microns; emission centered at 0.6934 microns). As noted above, the mullite may conveniently be employed to physically support the host and sensitizer materials. The actual examples follow: ##EQU3## FIG. 13 is a schematic showing of an apparatus for a continuously processing feed stock such as the materials disclosed in the foregoing examples, or steam, of course. In FIG. 13 the reaction chamber 402 is provided with upper and lower manifold chambers 404 and 406 which are separated from the main portion of the reaction chamber 402 by apertured plates 408 and 410. Within the reaction chamber 402 are a large number of the ceramic tubes 412 such as those shown in FIG. 11. All of the space within chamber 402 apart from that occupied by the tubes 412 is filled with a reactant such as manganese oxide or other reactants disclosed elsewhere in the present case and in my prior co-pending specification cited above. A heat or radiation exchanger including upper and lower manifold structures 414 and 416 as well as the interconnecting tubes or pipes 418 exposes the feed stock, which is applied through input tube 420 and brought out through tube 422, to the high temperatures and radiation present within the main reaction chamber 402. At the center of the apparatus shown in FIG. 13 is a burner 424 to which a lower inlet pipe 426 and an upper outlet pipe 428 are connected. This central burner unit may be of the type shown in FIG. 9 of the drawings and as described hereinabove. The entire reaction chamber 402 shown in FIG. 13 is fully insulated and mounted as shown in FIG. 9, and equipped with suitable automatic valving of the type described above in connection with other embodiments of the invention. In operation, steam is initially supplied to the reaction chamber 402 through inlet line 430 when valve 432 is opened. Of course prior to this initial step, the reaction chamber 402 has been preheated to a temperature in the order of 1000.degree. Kelvin, and the steam is supplied under high pressure. Hydrogen is then displaced by the action of the reactant, and the host/sensitizer materials included in tubes 412, as described above. Hydrogen H.sub.2 and hydrogen peroxide H.sub.2 O.sub.2 are drawn off through the upper manifold 404 and the connecting line 434 through valve 436. During the hydrogen displacement phase of the cycle, additional oxygen may be supplied through line 438 via valve 440. The additional oxygen promotes the formation of hydrogen peroxide, which is, with the hydrogen, drawn off through line 434. he overall cycle of reaction chamber 402 may be substantially as indicated by one of the two plots shown in FIG. 7.

Accordingly with the steam valve 432 and the valve 436 to the hydrogen storage tank both closed, the vacuum may be applied to the reaction chamber 402 so that disproportionation of the oxygen from the reactant takes place. While the hydrogen displacement at high pressure and the oxygen disproportionation phase of the cycle at low pressure is occurring in the main reaction chamber 402, the feed stock may be continuously passed through the heat and radiation exchanger 414, 416, 418, at a suitable rate to maintain the desired high temperature and high level of radiation of the feedstock. Incidentally the tubes 418 interconnecting the upper chamber 414 and the lower chamber 416 may be made of mullite including the host/sensitizer materials mentioned in the various examples given above. Similarly the manifolds 414 and 416 may be made of such materials. Alternatively the elements 414, 416, and 418, may be made of metal, such as stainless steel, to which suitable quantities of host/sensitizer materials have been added in order to give the desired intimate irradiation action with regard to the feed stock.

Instead of using a single reaction chamber as shown in FIG. 13, a heat and irradiation exchange unit could be employed with a multiple reaction chamber apparatus such as that shown in FIG. 9. When used with a multiple reaction chamber arrangement such as that shown in FIG. 9, of course the heat exchange elements must make sealing engagement with the walls of the individual reaction chambers which will be at different pressures during different portions of the individual staggered cycles in the different reaction chambers.

It may be noted that, in accordance with disclosures in my prior co-pending patent application cited above, and teachings found elsewhere in the present specification, the hydrogen and H.sub.2 O.sub.2 "tailings", obtained as a vacuum is being drawn on line 438, and such output hydrogen and/or hydrogen peroxide from line 434 as may be desired, may be applied through line 426 to the central burner 424. This may serve the purpose of supplying additional heat to the entire unit to permit more rapid flow of feed stock through lines 420 and 422 without loss of temperature in reaction chamber 402. Energy Balance In my prior co-pending patent application an "Energy Balance" section was included. In the present specification, a portion of the prior analysis will be set forth, and a more thorough energy analysis involving the new material in this application will be included. In view of the fact that the apparatus of the present type and as disclosed in my prior application are exothermic on a net basis and also produces hydrogen or hydrogen peroxide which can be burned, there have been some suggestions that certain so-called Laws of Thermodynamics are being violated. This is of course not the case, as will be developed by the Energy Balance analysis set forth below.

From an overall standpoint, the present system may be viewed as providing an energy balance and not violating any "Laws of Thermodynamics" as a result of the low energy content gaseous products which are released in the course of the process. These low energy gaseous products may include HO and HO.sub.2, which are less wellknown gaseous products. When these gaseous products are released into the atmosphere, it is believed that they absorb high frequency radiations, and eventually change state to become hydrogen gas, oxygen gas, water vapor, atomic hydrogen and atomic oxygen. In one sense, therefore, the present systems may be considered to utilize solar energy. The stoichiometric reactions set forth below represent one of several modes of operation which may obtain in implementations of the present invention. ##STR1##

The foregoing equations may be analyzed from two different standpoints. Incidentally, it may be noted that the "2HO" designated (4) in the upper equation is actually evolved in the disproportionation phase. In addition, a portion of the hydrogen gas H.sub.2 from (6) in the upper equation is an input in the lower equation which combines with the disproportionated oxygen to form HO. Also, of course, the incident photons are applied in the atmosphere, and not in the apparatus per se. It should also be noted that the O.sub.2 input designated (2) is essentially optional and may involve the venturi unit 212 or inlet 217, of FIG. 6, whereby additional O.sub.2 is supplied to generate H.sub.2 O.sub.2, as noted above. Now, the upper equation will be analyzed from a potential energy standpoint:

Actually, there is often a combination of H.sub.2 and H.sub.2 O.sub.2, resulting in an intermediate efficiency. In the following analyses, the enthalpies and entropies of the starting reactants are subtracted from the enthalpies and entropies, respectively, associated with the products. The letters "in" have been associated with the initial values relating to the starting products. ##EQU4##

From the foregoing analysis, it may be noted that the heat or enthalpy for the hydrogen generation portion of the cycle is equal to -28.76 K Cal/Mol-Eqn, which means that the reaction is exothermic. For the "Reverse Reaction" or the oxygen disproportionation part of the cycle, the heat or enthalpy figure is +6.40 K. Cal/Mol-Eqn. This means that the disproportionation part of the cycle is endothermic, but that the heat required is much less than that generated in the other portion of the cycle. With thoroughly insulated equipment the heat generated during the exothermic portion of the cycle, in the same or other adjacent reaction chambers, is more than sufficient to provide the heat needed during the disproportionation part of the cycle. It may also be noted that the positive entropy value for the "Reverse Reaction", or the disproportionation cycle, indicates that this reaction will go forward spontaneously. Energy Balance -- Second Mode

Another pair of (1) Displacement of Hydrogen and (2) Disproportionation reactions appears below, together with a classical Gibbs Free Energy Analysis. Also included are the text citations for the entropy and enthalpy values used in the analysis. The following mode emphasizes the production of hydrogen peroxide, H.sub.2 O.sub.2, and carries over its use in the disproportionation part of the cycle. It may also be noted that the first mode and second mode presentations are not precisely comparable as H.sub.2 O.sub.(e) is assumed as an input for the first mode, and H.sub.2 O.sub.(g) is assumed as an input for the second mode as set forth below. As indicated by the negative value of the enthalpy for the two reactions of the second mode, it is also exothermic on an overall basis. The equations for (1) hydrogen displacement and (2) oxygen disproportionation, are set forth below, together with their associated Enthalpy (H), Entropy (S) and Gibbs Free Energy functions. From the negative value of -8Kcal/Mol-Eqn. of the enthalpy (heat) of the entire reaction, including both displacing hydrogen from water vapor and disproportionating oxygen from the reactant, it is clear that the process is exothermic, in addition to generating hydrogen and/or hydrogen peroxide. And this surprising result, in one or the other or a combination of the modes described in the foregoing equations has been confirmed by the operation of prototypes using manganese oxide as the reactant.

Set forth below is a further analysis involving the photon dissociation of H.sub.2 O, and an examination of the energy "borrowed from nature" and "returned to nature", or to the environment. In connection with the following analyses, it may be noted that the energy for photon dissociation of the H.sub.2 O is obtained from the heat reservoir of hot reactant which is of course maintained at an elevated temperature by the net exothermic nature of the hydrogen displacement and oxygen disproportionation cycle. When mention is made of the combustion of H.sub.2 O.sub.2 in the following analysis, this combustion is in the course of performing useful work such as driving an engine, or the like, apart from the reaction chamber as described In closing, reference is again made to my copending patent application Ser. No. 768,808, filed Feb. 15, 1977, in which more detail is presented relative to the temperatures, pressures, and other reactants which may be used. As noted in the prior specification, the temperature of operation should be above the dissociation temperature for oxygen for the reactant being employed at atmospheric pressure. Advantageous high speed results have been achieved with the reactant in the pyroplastic state of incipient fusion. Concerning pressures, the pressure during dissociation should be at least as low as atmospheric pressure, and preferably a vacuum should be applied to reduce the pressure to a fraction of atmospheric. The vacuum may be applied to draw the tailings through the burner to extract additional heat from the tailings. During the hydrogen displacement portion of the cycle the pressure should be well above atmospheric to facilitate sequestering of the oxygen by the reactant. Successful results may be achieved with reactants such as MnO with gauge pressures of about 100 to 130 or 150 and up to 500 pounds per square inch. Even higher pressures may be employed. Concerning the active reactant, as mentioned in my prior copending specification, it preferably includes at least one metal having a plurality of valence states. It should also have an oxide which will, when subjected to water vapor at elevated temperature and/or pressure, and preferably both, combine with the oxygen and displace the hydrogen in gaseous form exothermically. The reactant also preferably has the property of disproportionation or dissociation to release the combined oxygen when the temperature is raised or preferably when the pressure is reduced, and when the evolved oxygen is separated from the reactant. Advantageously, the heat required in the disproportionation part of the cycle is significantly less than that generated in the exothermic portion of the cycle when the reactant combines with the oxygen in the steam and releases hydrogen, so the entire cycle is exothermic. Also, the reactant should be susceptible of remaining in the pyroplastic state of incipient fusion during the change in state from one oxidation level to another, and back again, under the described conditions. Some of the metals and oxides thereof which fulfill the foregoing requirements include (1) antimony, (2) cesium, (3) barium, (4) iron, (5) manganese, (6) chromium, (7) iridium, (8) nickel, and (9) thallium. Other metals which have multiple valence states are known, but most of these have practical problems which preclude their use. Thus, for example, mercury has too low a melting point, and its oxides are unstable. In the case of other metals having multiple valence states, their oxides may be poisonous, they may be caustic or are not available in practical or commercially available quantities. Other metals having multiple valence states have oxides which will not readily disproportionate. Combinations of reactants satisfying the requirements indicated above may be employed in the form of alloys, eutectics, and with other materials to obtain desired temperature and mechanical properties. In the foregoing specification a number of examples of reactants, and host/sensitizer combinations have been set forth, and the principles for their selection to implement particular needs have been defined; accordingly, the scope of the present invention is not restricted to the specific illustrated example, but is to be defined only by the appended claims:

4.0.2.8. High efficiency energy transfer technique; US #: 4,148,701; April 10, 1979;
(Palos Verdes Peninsula, CA)

An apparatus is disclosed for exothermically obtaining hydrogen or hydrogen peroxide from water vapor in a reaction chamber. The separation of the hydrogen and oxygen may be accelerated through the use of a combination host and sensitizer material which is present near spaces or voids within the reaction chamber. The water vapor has certain particular absorption bands in its absorption versus frequency characteristic. Each of the sensitizers which are located adjacent the voids in the reactant, in one embodiment forming part of the walls of small cylindrical tubes, has an energy output in the excited state which is precisely in one of the energy absorption bands in the water vapor characteristic. The host material absorbs heat energy and excites the sensitizer material. In addition to the formation of free hydrogen, some hydrogen peroxide is also formed. Other feedstocks may have energy selectively applied to them. Alternative appparatus for applying high intensity radiation to feedstock include (1) a reaction chamber in which conductive wires are coated with two different host and sensitizer materials; and (2) a reaction chamber irradiated by beams from two lasers of different frequencies. In both of these apparatus the radiation of two different frequencies beat together as the radiation impinges on the media discontinuities provided by the feedstock and creates new sum and difference frequencies, with the higher sum frequencies providing energetic radiation effects.

This patent application is a continuation-in-part of U.S. patent application Ser. No. 790,320, filed Apr. 25, 1977, now U.S. Pat. No. 4,113,589.

RELATED PATENT APPLICATIONS
The subject matter of the present specification is related to that disclosed in the specification of U.S. Patent application Ser. No. 768,868, filed Feb. 15, 1977, and entitled, "Method and Apparatus for Generating Hydrogen".

BACKGROUND OF THE DISCLOSURE

This invention relates to apparatus and method for increasing the efficiency and amplifying the effectiveness of energy transfer, particularly from a high temperature source of energy.

In the specification of the patent application cited above, an apparatus is described in which hydrogen and/or hydrogen peroxide is formed exothermically from water vapor, using a body of material such as manganese oxide raised to a high temperature to sequester the oxygen from the water vapor. The process takes place at relatively high pressure above about 5 atmospheres, and at a temperature in the order of 1000.degree. Kelvin. After the hydrogen is drawn off at relatively high pressure, a check valve closes, and the oxygen is removed from the manganese oxide at a reduced pressure well below atmospheric pressure, by the use of a vacuum for example.

As the hydrogen is being drawn off from the reaction chamber, the formation of hydrogen peroxide was disclosed, through the use of a venturi unit by which oxygen from the atmosphere was combined at high temperature with the hydrogen.

SUMMARY OF THE INVENTION

In accordance with one limited and specific aspect of the invention, the breakup of the water vapor molecular, H.sub.2 O, may be accomplished more rapidly and effectively through the use of sensitizer materials and host materials which absorb heat energy from the manganese dioxide or other reactant and radiate energy which is concentrated in the high absorption portions of the absorption versus frequency characteristic of water vapor to break up the water vapor molecule.

This action is enhanced through the use of small cells which form voids throughout the reactant, and which are provided with the special sensitizer and host material around the periphery of the voids. These voids may be produced by wire mesh cells, or by ceramic cylinders having wire mesh at each end, for example, so that the water vapor may readily pass through the cylinders. The wire mesh or the walls of the cylinders contain the special host and sensitizer materials which apply highly concentrated radiation to the water vapor at precisely the frequency bands at which the water vapor absorbs energy. It is also believed that the atomic radiations from the sensitizer material are coherent and thus apply an unusally high level of concentrated radiation to the water vapor. The nature of the phenomena which are involved and several specific examples of host and sensitizer materials both for water vapor and for other feedstocks to which it is desired that energy be applied, will be considered in detail in the body of the present specification.

In addition to accelerating the generation of hydrogen by the application of high levels of energy to water vapor, instead of by sequestering the oxygen in the course of raising manganese oxide to higher oxidation levles, the present apparatus also permits direct formation of hydrogen peroxide after the water vapor molecule is broken up, as this is the preferred combinational form of hydrogen and oxygen at the elevated temperatures and pressures which are present in the reaction chamber.

In accordance with a broader aspect of the invention, an improved technique is provided for increasing the efficiency of application of radiant energy to a feedstock. This is accomplished through the use of the heat reservoir including a mass of material, a wire, or other element heated up to an elevated temperature, and the use of special sensitizer material and host material for absorbing energy from the heat reservoir and for applying energy to the feedstock at precisely those bands in the frequency spectrum at which the feedstock has high absorption to radiant energy. In function, the host material absorbs heat energy from the heat reservoir and applies energy at a specific frequency sufficient to raise the sensitizer material to an excited state. The sensitizer is chosen so that, as it shifts from its excited state to a lower or ground energy state, it radiates energy precisely in the absorption band of the feedstock. By choosing a suitable sensitizer, and exciting it to its upper excitation level, a population inversion of atoms of the sensitizer in the excited state is produced, so that, as certain of these atoms drop to their lower energy states this will coherent radiation from large numbers of these sensitizer atoms with the result that very intense and concentrated radiation impinges on the feedstock precisely at the energy levels to which it is most sensitive.

One particular advantage of the present invention is the increased speed and higher efficiency of energy transfer which is achieved by the use of the host and sensitizer materials. In the specific case of the water vapor, for example, it is not necessary to sequester all of the oxygen; instead, many of the water vapor molecules are broken up, and hydrogen peroxide is immediately formed. If desired, additional oxygen may be brought into the reaction chamber along with the water vapor to provide more complete conversion of the water vapor to hydrogen peroxide.

In accordance with an advantageous feature of certain embodiments of the invention, the application of energy derived from the heated reactant to the feedstock may be accomplished with the feedstock in thermally conductive relationship, but isolated from the chamber in which the reactant is located, so that the feestock may be irradiated continuously, while the reactant is (exothermically) sequestering oxygen from water vapor at a high pressure, and subsequently dissociating the oxygen at a low pressure. The walls of the pipes or other structure for separating the feedstock from the reactant may include the host/senstizer material, or may be transparent to the radiations being directed from the adjacent host/sensitizer material to the feedstock.

In accordance with an additional feature of the invention high efficiency energy transfer to a feedstock may be accomplished by the use of a reaction chamber, including wires coated with host and sensitizer material of the type discussed above, for transforming broad band heat energy into radiation in the specific absorption band of the feedstock, such as steam, which is to be acted upon. The heat energy may be supplied by passing electricity through the coated wires, or by superheating the incoming feedstock, as desired. In accordance with a further aspect of the invention, two or more different output radiation frequencies may be radiated into the reaction chamber, to interact with each other to produce sum and difference frequencies, interacting with media discontinuities, thereby providing the flexibility to "hit" the feedstock with high energy ultraviolet radiation, for example. This is particularly advantageous when the feedstock has absorption bands in the U. V. frequency spectrum.

This input radiation to the reaction chamber may be provided in several different ways. For example, sets of differently coated wires having radiation characteristics at different frequencies may be employed; and, alternatively, a hollow reaction chamber having highly reflective inner walls may be irradiated by two lasers operating at different frequencies. In each case the selected feedstock would be fed through the reaction chamber under suitable temperature and pressure conditions and the output product would be concurrently drawn off. Again, by matching the radiant energy supplied to the reaction chamber to the absorption characteristics of the feedstock, unusually high efficiencies are achieved. In accordance with a further feature of the invention, the reaction chamber may be divided into input and output sections. with one type of radiation being especially suitable for initial irradiation of the feedstock, and another frequency or set of frequencies being applied to the output section, with these latter frequencies being selected to avoid adverse effect on the product gases. A feature of the invention involves the introduction of additional air into the reaction chambers to combine with the hydrogen which is dissociated from water vapor to produce hydrogen peroxide, with the collateral advantage of supplying heat to the reaction chamber from this exothermic reaction. ther objects, features, and advantages of the invention will become apparent from a consideration of the following detailed description and from the drawings.

Initially, before considering the drawings in detail, the relationship between the subject matter of the present case and that set forth in my prior copending case, U.S. patent application Ser. No. 768,868, filed Feb. 15, 1977, should be noted in greater detail. Specifically, the main difference between the apparatus of the present invention and that of the prior case is that the special sensitizers and host materials are added in the reaction chambers so as to be directly exposed to the water vapor. Additional oxygen may be supplied to the reaction chamber to facilitate formation of H.sub.2 O.sub.2 in the reaction chamber, and the withdrawal of the H.sub.2 O.sub.2 with H.sub.2 from the reaction chamber. The following description of FIGS. 1 through 8 of the drawings will closely parallel that set forth in my prior copending U.S. patent application Ser. No. 767,868. The portion of the detailed specification which is more closely related to the new host material and sensitizer material subject matter, and to the matching of the reaction characteristics to the absorption versus frequency characteristic of the feedstock will be found in that portion of the specification involving the description of FIGS. 9 through 13, and particularly FIGS. 10 through 13 in the following description.

DETAILED DESCRIPTION

Turning now to FIG. 1, the system of the present invention is generally designated by the numeral 10 and it comprises reaction chambers 12, 14, 16 and 18, heating means generally designated 20, and a hydrogen and hydrogen peroxide reservoir or accumulator 22. Water enters the system at conduit 24, passes through flow control valve 26 and conduit 28 to manifold 30. Water may then be supplied to heat exchange coil 32 through valve 34 and conduit 36, to heat exchange coil 38 through valve 40 and conduit 42, to heat exchange coil 44 through valve 46 and conduit 48, and to heat exchange coil 50 through valve 52 and conduit 54. It will be seen that conduit 36 is the inlet end of heat exchange coil 32, the outlet of heat exchange coil 32 being conduit 56 which is connected to one end of reaction chamber 12. Similarly, the outlet end of heat exchange coil 38 is conduit 58 connected to one end of reaction chamber 14, the outlet end of heat exchange coil 44 is connected to one end of reaction chamber 16 through conduit 60, and the outlet end of heat exchange coil 50 is connected to one end of reaction chamber 18 through conduit 62.

Vacuum is applied to the system, for purposes which will become apparent as the description proceeds, through conduit 64, flow control valve 66, and conduit 68 which is connected to one end of a conventional gas burner 70. It will be appreciated that heating means 20 comprises burner 70 and heat exchange coils 32, 38, 44, and 50, and their respective conduits and valves generated in the reaction chambers 12, 14, 16, and 18 passes through conduits 72, 74, 76 and 78, respectively and valves 80, 82, 84 and 86, respectively, to manifold 88. The hydrogen and/or hydrogen peroxide then passes through conduit 90 with check valve 92 to hydrogen accumulator 22 where it is then drawn off for use through conduit 94, flow control valve 96, and conduit 98. Conduit 100, flow control valve 102 and conduit 104 are provided to allow atmospheric air to enter the system when and if needed, as will be described more fully hereinbelow.

Before proceeding further with a description of the system, it should be distinctly understood that while the example given herein for purely illustrative purposes includes four reaction chambers, there is, in fact, no limit other than practical considerations of size and weight as to the number of reaction chambers used. In fact, the invention could be practiced with as few as one reaction chamber and as many reaction chambers as desired, there being no reason why a bank of dozens or even a hundred reaction chambers could not be used. For this reason, applicant is not limiting himself to the use of four reaction chambers except for illustrative purposes. Obviously, one skilled in the art would easily be able to include the necessary valve elements and other hardware if he were adding more reaction chambers.

With the foregoing understood, the description of the instant inventive system will proceed. The system runs at about 900.degree. K. or 1000.degree. K. and may be pre-heated by any well-known electrical heating means such as that described in the parent application. Alternatively, pre-heating can be accomplished by burning hydrogen in burner 70, the hydrogen being the "tailings" left in one or more of the reaction chambers from a previous run of the system. For this pre-heating cycle, flow control valve 26 is opened to allow water to enter the system filling manifold 30. Valves 34, 40, 46 and 52 remain closed during this cycle. Valves 106, 108, 110 and 112 are opened. Vacuum is applied at conduit 64 with valve 66 opened. Thus, it will be seen that vacuum is applied via conduit 68 to burner 70. Since the other end of burner 70 is connected to conduit 114 which, in turn, is connected to manifold 116, manifold 116 is under vacuum. Then, since valves 106, 108, 110, and 112 are open, the vacuum is applied to reaction chambers 12, 14, 16 and 18, respectively, through conduits 118, 120, 122 and 124, respectively. Thus, any residual hydrogen tailings remaining in any of the reaction chambers is drawn into the inlet end of burner 70 to be burned along with any residual oxygen tailings or with atmospheric air drawn in through conduit 100 and valve 102 by the vacuum which also affects this air line. It should also be noted that in event of a "cold" start where there are no hydrogen tailings to be burned, a combustible gas, such as hydrogen, could be drawn in through conduit 100 and valve 102 to provide the initial start-up heat. The burning of hydrogen in burner 70 provides considerable heat which, by radiation and conduction is passed to the reaction chambers which are filled with reactant 126. When the system is pre-heated to a sufficiently high temperature, we are ready to proceed with the generation of hydrogen and hydrogen peroxide.

Valve 34 is opened to allow a predetermined amount of water to enter heat exchange coil 32 which is, in essence, a steam generator. The water is "flashed" to steam and delivered through conduit 56 to the inlet end of reaction chamber 12. The steam enters reaction chamber 12 containing reactant 126 to fill the total void volume and is constrained in this volume because all outlet valves are closed. The residence time, or reaction time, may be controlled from a few seconds (typically about 2 to about 3 seconds) to a rather long time (typically about 60 seconds), depending on the reactant used, the particulate size, the temperature, and the pressure. Valves 108, 110, and 112 are fully opened to allow the vacuum evacuation of all residual gases in the other reaction chambers and their respective heat exchangers and piping. It should be noted that since a predetermined amount of water was to be passed to heat exchange coil 32, valve 34 was opened for just a brief period and then closed.

Steam having entered and permeated reactant 126 in reaction chamber 12, valve 40 is then opened briefly to allow a metered amount of water into heat exchange coil 38, with the steam generated therein then passing through conduit 58 to reaction chamber 14. Valve 40 is then closed. The steam which passes into reaction chamber 14, as with the steam which had passed into reaction chamber 12, is converted into hydrogen and/or hydrogen peroxide and then held restrained in the reaction chamber for the predetermined control time. In the meantime, valve 80 is opened so that the pressure built up in reaction chamber 12 will force the hydrogen to exit through conduit 72 and valve 80 into manifold 88 and then through check valve 92 into the hydrogen accumulator 22. Valve 80 is then closed and valve 106 is opened to allow the vacuum to empty the residual hydrogen and oxygen tailings from reaction chamber 12 and pass it to burner 70 where the mixture is burned using disproportionated oxygen from reaction chambers 12, 16, and 18 along with additional atmospheric oxygen supplied through conduit 100, if necessary. It should be noted that when valve 80 was opened to pass the hydrogen and/or hydrogen peroxide out of chamber 12, and then vacuum was applied by opening valve 106, the oxidized reactant in chamber 12 disproportionated to release the bound oxygen since the temperature in the reaction chamber remained high and the pressure was lowered.

With valve 106 still open, valve 82 is also opened to allow the hydrogen and/or hydrogen peroxide generated in reaction chamber 14 to flow into the manifold 88 from which it is directed into the hydrogen reservoir 22. In the meantime, valve 46 had briefly opened to allow a metered amount of water into heat exchange coil 44 and then the steam formed in heat exchange coil 44 passes to the inlet end of reaction chamber 16. At this point, valve 84 is still closed. Valves 106 and 112 are still open to allow vacuum to exhaust chambers 12 and 18.

Valve 82 then closes and valve 108 opens along with valves 106 and 112 which are also open. Thus, hydrogen and/or hydrogen peroxide and oxygen tailings are being conveyed through valve 108 to burner 70 for combustion with the combustion gases being exhausted through conduit 68.

Then, valve 84 is opened to pass the hydrogen and/or hydrogen peroxide from reaction chamber 16 to manifold 88. Valves 106 and 108 are opened to allow vacuum to exhaust the respective chambers 12 and 14 while valve 52 has been allowed to briefly open to pass a metered amount of water to heat exchange coil 50 with the steam being formed then passing to reaction chamber 18. The steam in reaction chamber 18 reacts with reactant 126 to form hydrogen and/or hydrogen peroxide which is restrained since valve 86 is still closed. Valves 106, 108 and 110 are all open so that the other reaction chambers are being exhausted.

Valve 88 is then opened to relieve the pressure on reaction chamber 18 and allow the hydrogen and/or hydrogen peroxide to pass to manifold 88. At this point, the whole cycle starts again and valve 14 is briefly opened to allow a metered amount of water to pass to heat exchange coil 32, valve 86 is closed, and valve 112 is opened. The whole cycle then repeats.

While the system of the invention is shown schematically, it will be readily understood by one skilled in the art that it can be easily constructed. The valves are all of a mechanical type which are cam operated so that a precise timed sequence of events can be carried out in a predetermined manner, the timing of the opening and closing of the valves being controlled by the size, shape, configuration and speed at which the cams are moving.

The instant process is a process in which a relatively small amount of heat-energy input, (in the form of pre-heat for the reactant) provides conditions for the reactant to effect changes of state, during which a gaseous chemical molecule is completely dissociated into its separate gaseous atoms by two distinct phenomena. In the course of one of these phenomena, the solid reactant concurrently effects a "change of state" by means of an exothermic transformation from one oxidation product level to another oxidation product level; and in the course of the second phenomena, to be described in detail below, the H.sub.2 O molecules are directly dissociated by photon energy, forming H.sub.2 and also H.sub.2 O.sub.2, hydrogen peroxide.

It should also be noted that pressure changes play an important part in the system. Specifically, the reactant is heated to a temperature well above the dissociation temperature for oxygen from the metallic oxide of higher oxidation number at room tempeature. This temperature for MnO.sub.2 is given in handbooks as 535.degree. C., and at atmospheric pressure this MnO.sub.2 will dissociate to Mn.sub.2 O.sub.3 at temperatures above 535.degree. C. Accordingly, it is desired to operate at temperatures well above 535.degree. C. such as 600.degree. C. to 950.degree. C. In addition, during the hydrogen formation portion of the cycle, the pressure must be well above atmospheric so that the oxygen will be absorbed by the Mn.sub.2 O.sub.3 (the oxide of lower oxidation number), with a pressure of about at least 75 psi or 100 being preferred, and preferably between 100 psi and 150 psi to as high as 200 psi or more. In addition, during the oxygen disproportionation phase, the free oxygen and other gases are removed from the vicinity of the reactant, preferably by a reduction in pressure to less than atmospheric, with about one-tenth atmosphere being successfully employed. As can be appreciated, by using temperatures and pressures well above and below critical levels during the two phases of the cycle, increased speeds of operation may be obtained.

Reference is now made to FIGS. 2 and 3 wherein the heating means 20 is shown in more detail. Heating means 20, as already discussed, comprises burner 70 and heat exchange coils 32, 38, 44, and 50. Burner 70 comprises casing 128 made of any suitable metallic material lined with a porous fire brick insulation 130 which is carved or otherwise formed to fit casing 128 and has an axial hollow core running longitudinally through most of its length. The hollow core is, in turn, filled with a suitable surface catalyst 132 for "burning" hydrogen and oxygen to form steam. Through the center of heating means 30 is a conventional electrical resistance heating element 140 which is used, when necessary, for pre-heating the system for a cold start. At the lower end of heating means 20 as in the drawings, are atmospheric air inlet 104 and residual tailings inlet 114. At the upper end is exhaust line 68.

The next sub-system under consideration is the reaction chambers 12, 14, 16 and 18. For an understanding of the construction of the reaction chambers, attention is directed to FIG. 4 where a single reaction chamber designated generally as 142 is shown. Reaction chamber 142 comprises an outer casing 144 made of any suitable material such as 3/8 inch thick stainless steel or as discussed in the aforementioned co-pending application. It is filled with reactant 126 as discussed above and as shown and described below in connection with FIGS. 8, 11 and 12. Passing axially through the reactant is a conventional electrical resistance heating element 146, this heater being essentially the same as heater 140 in FIG. 22. This may be used for pre-heat in a cold start. As already discussed, however, the exact means used for pre-heating the system is not critical to the invention and any means well-known in the art for accomplishing this end may be used. The reactant 126, including sensitizer and host materials, is placed in casing 144 leaving a space at each end, these spaces being designated in FIG. 23 as 148 and 150. Spaces 148 and 150 essentially serve the function of surge tanks, manifolds, or the like. Steam inlet 152 and vacuum inlet 154 are provided at one end of reaction chamber 142 and hydrogen outlet 156 is provided at the other end. Steam inlet 152 corresponds to conduit 56, for instance, vacuum outlet 154 corresponds to conduit 118, for instance, and hydrogen outlet 156 corresponds to conduit 72, for instance, in FIG. 1.

Turning now to FIG. 5, the preferred configuration of the apparatus is shown along with the subsystem which includes the valves and driving mechanism for the same as well as the "plumbing". It will be seen that the valves which are described above are arrayed in a single line. The valves are of a conventional type which are operated by pushing or releasing a plunger designated, for convenience of illustration, as 158 in conjunction with valve 34. It will be appreciated that while the description of the valves refers to valve 34 and plunger 158 for exemplary purposes, each of the valves operates in the same manner. A variable speed motor 160 turns a drive shaft 162 which is journaled in mounting plates 164 and 166. Fixedly mounted on drive shaft 162 are cams 168, with one cam corresponding to each of the valves and mounted on drive shaft 162 in such a way as to cooperate with plunger 158 of each valve. Thus, as motor 160 turns drive shaft 162 and, in turn, cams 168, the valves are opened and closed in a manner which is predetermined by the positioning of cams 168. This, of course, will be readily understood by one skilled in the art.

Referring further to FIG. 5, it will be seen that the reaction chambers are set vertically in an enclosure that is square in cross-section and are shown in the drawing with reaction chamber 12 in the front left-hand corner, reaction chamber 14 in the rear left-hand corner, reaction chamber 16 in the front right-hand corner, and reaction chamber 18 in the rear right-hand corner. Heating means 20 is disposed in the center. The enclosure or, more specifically, inner enclosure 170 is preferably made of magnesium oxide packed in a stainless steel container. This material was chosen because it distributes heat evenly throughout the volume of the enclosure 170. Surrounding inner enclosure 170 is outer enclosure 172 which is made of any suitable material such as stainless steel and filled with a high quality insulation such as alumina fibers. It will be appreciated by one skilled in the art that any high quality, high temperature, insulating material may be used.

Returning to a consideration of the drawings, FIG. 6 is a block schematic drawing showing in a central position the reaction chamber or chambers 202 and an immediately associated steam generator 204. A reservoir of water 206 supplies water to the steam generator 204, which may be of any of the types described in connection with earlier figures of the drawings. In this connection, it may be noted that all of the arrangements shown in FIG. 6 are applicable to the hydrogen generation apparatus shown hereinabove in the present specification.

Steam or water vapor is supplied to the reaction chamber or chambers 202 through line 208 which may of course be internally connected between the immediately adjacent and thermally connected units 202 and 204. Hydrogen from reaction chamber or chambers 202 may be routed through output line 210 to the venturi tube combining unit 212 which is also in intimate heat-conducting relationship with reaction chamber 202 and the steam generator 204. As mentioned above, in connection with manganese oxide the temperature of the entire assembly, including the venturi unit 212, may be in the order of 600.degree. to 950.degree. C.

Hydrogen peroxide may be formed in either of two ways, and the proportion of hydrogen peroxide to hydrogen gas may be controlled by valves 213 and 215. Initially, considering the formation of H.sub.2 O.sub.2 within the reactor chambers, by photon action, valving 215 would be opened while steam is present in the reaction chambers and while the H.sub.2 gas is being drawn off, and oxygen at high pressure, corresponding to the pressure of the reaction chamber is admitted to chambers 202 via conduit 217 from pump 219.

Now considering the subsequent formation of H.sub.2 O.sub.2, valve 215 would be permanently closed, and valve 213 would be open. When hydrogen starts to flow rapidly through the venturi unit 212 the check valve 214 will open and oxygen will be combined with hydrogen to form hydrogen peroxide. This combination of hydrogen with oxygen is an exothermic reaction as set forth quantitatively in equation form hereinbelow. The hydrogen and hydrogen peroxide is stored in reservoir 216, which is maintained at a relatively high pressure level by the check valve 218 which prevents loss of hydrogen back toward the reaction chamber 202 between the intermittent withdrawing of hydrogen from the reaction chamber 202. Hydrogen and hydrogen peroxide may be withdrawn as needed from the reservoir 216 through an output line 220. By closing both valve 213 and valving 215, the amount of hydrogen peroxide which is generated is severely limited, and the bulk of the output will be hydrogen, rather than H.sub.2 O.sub.2.

Vacuum pump 221 may be employed to speed up separation of oxygen, hydrogen tailings, and other residual gases from the reactant during dissociation or disproportionation.

with regard to the block diagram of FIG. 6, it is to be understood that the components shown in this figure may be employed in connection with any system described hereinabove in the present specification. Specifically, the various input and output control valves have been, for the most part, omitted from FIG. 25 for purposes of simplicity. Similarly, the precise physical arrangement, with the units 202, 204 and 212, for example, being in intimate heat-conducting relationship with each other, and insulated from the atmosphere, is not shown in FIG. 25, but may be in accordance with disclosures of other units disclosed in the present specification.

FIG. 7 shows a typical pressure versus time cycle for a system in accordance with the present invention using manganese oxide as the reactant, and four reaction chambers. This is, for example, of the type described hereinabove in connection with FIGS. 1 through 5 of the drawings. The pressure is "gauge" pressure in pounds per square inch (psi). With this pressure scale, atmospheric pressure is of course indicated by zero.

Considering the cycles shown in FIG. 26 from an overall standpoint, the complete cycle for each reaction chamber including both breaking up the water vapor and dissociating the oxygen from the reactant may be 40 seconds. However, the cycles of the reaction chambers are evenly staggered in operation, by 10 seconds in the example so that hydrogen is generated on a substantially continuous basis. In FIG. 26 the pressure cycle for reaction chamber No. 1 is shown in the lower characteristic, and the pressure cycle for reaction chamber No. 2 is shown in the upper characteristic. The pressure versus time characteristics for reaction chambers Nos. 3 and 4 are substantially the same as those of chambers Nos. 1 and 2, but are displaced by additional 10 second intervals. Now, referring specifically to the lower characteristic 230 in FIG. 7, the cycle starts with the opening of the water inlet valve for a couple of seconds at the beginning of the cycle. Steam is promptly generated and fills the first reaction chamber. At about 6 seconds, the hydrogen outlet output valve is opened as indicated by arrow 232. Hydrogen and/or H.sub.2 O.sub.2 continues to flow until about 16 or 17 seconds of the cycle, when the hydrogen pressure drops to the hydrogen reservoir pressure, indicated as equal to 80 pounds by the dash dot line 234 in FIG. 26. The closure of the hydrogen reservoir check valve 218, as shown in FIG. 25, is indicated by the arrow 236 in FIG. 7. Soon after the closure of check valve 236 the pressure release and vacuum pump valve is opened, as indicated by arrow 238 and the pressure drops along characteristic 240 to the negative pressure of about one-tenth of an atmosphere indicated by line 242. During the interval from about 20 seconds to 40 seconds the disproportionation phase takes place. Then at approximately 40 seconds the water inlet valve is opened again, and the cycle repeats. The upper characteristic in FIG. 7 shows the same cycle for reaction chamber No. 2 as described above for reaction chamber No. 1. In the upper characteristic the same reference numerals are employed, but primes are employed in place of the unprimed numbers used in connection with the lower plot of FIG. 7. FIG. 8 is a fragmentary view of a portion of a reaction chamber such as that shown in FIGS. 1 and 4 described hereinabove. In FIG. 8 the outer cylindrical wall 252 may for example be made of one-quarter or three-eighths inch stainless steel. Referring more specifically to FIG. 8, in order to expose the manganese oxide powder fully to the space within reaction chamber 258, this chamber is filled with a large number of hollow stainless steel screen elements which may be formed by taking small strips of stainless steel and folding them over upon themselves and welding or otherwise securing them together to form a hollow enclosed space. The chamber 258 is initially filled with these stainless steel, hollow mesh cells 260. Then a large quantity of manganese oxide is poured into the reaction chambers and is shaken down in among the stainless -steel mesh cells to completely fill the entire chamber 258. In FIG. 8 a number of these stainless -steel mesh cells designated 560 are shown, and the manganese oxide powder 262 between the cells is also indicated. It is to be understood, of course, that other techniques may be employed for exposing the reactant to the space within the reaction chamber, but the foregoing system has proved eminently satisfactory in at least one 4-reaction chamber apparatus which has been successfully operated. In addition, the host and sensitizer material may be included in the fabrication of the wire mesh cells 260. With water vapor within these wire mesh cells, this feedstock is fully exposed to the intense radiation from the sensitizer.

FIG. 9 shows an improved structural arrangement of the reaction chambers in which the four reaction chambers 302, 304, 306 and 308 are donut-shaped and are stacked up on top of one another in intimate heat conducting and transferring relationship. Each of the four reaction chambers is provided with two manifolds 310 and 312 to supply gases to the reaction chambers and to remove gases therefrom. These input and output manifolds serve the same functions as the spaces 148 and 150 at the top and bottom of the cylindrical reaction chambers as shown in FIG. 4, for example. Each of the reaction chambers 302, 304, 306, and 308 contain reactant, such as manganese oxide, and voids created by wire mesh cells as described above, or other structure which will be described below, with which the sensitizer and host materials are associated.

A burner 314 extends through the central opening of all of the four donut-shaped reaction chambers. The burner 314 has the general configuration shown in FIG. 3, but is provided with upper and lower apertured plates 316 and 318 for ease in applying the hydrogen and oxygen to the burner and for ease of withdrawing the burned gaseous products from the unit. Although the details of the burner 314 are not shown, it includes the refractory lining and the granular refractory material such as is shown at 130 and 132, respectively, in FIG. 3. The unit of FIG. 9 is also provided with heavy upper and lower plates 320 and 322, which are bolted together with a series of bolts 324 spaced around the periphery of the plates 320 and 322. With this arrangement the reaction chambers 302, 304, 306, and 308 are rigidly held together in intimate heat conducting relationship, and can withstand very high pressures even at very high temperatures with deformation of the reaction chambers. The reaction chamber assembly is mounted on any suitable insulating support as indicated by the blocks 326. A lower metal base 328 and lighter gauge stainless steel metal sidewalls 330 are also provided. High temperature heat insulating ceramic wool encloses the reaction chamber assembly and reduces heat radiation to very low levels. The ceramic wool is indicated by reference numeral 332 in FIG. 9. In passing, it may be noted that the use of flat donut-shaped reaction chambers provides a geometry which is superior to the set of five cylinders shown in FIG. 5, in that the reaction chambers are in more intimate heat conducting association with one another and with the central burner, than in the arrangement of FIG. 5. Apart from the physical arrangement of the four reaction chambers and the central burner, the "plumbing" and mode of operation of the system as described in connection with FIGS. 1 through 8, remains unchanged. A more detailed consideration of the absorption characteristic of water vapor and other possible feedstocks, and the matching of the host and sensitizer materials to the feedstock absorption characteristic will now be undertaken.

In FIG. 10 the relative transmittance and absorption of water vapor at different wavelengths is shown. By way of example, note that at wavelengths of about 2.5 to 2.6 microns, the curve which represents transmittance has a dip designated 342 in FIG. 10. This is in contrast to the peaks 344 and 346 which are centered just above 2 microns, and in the vicinity of 4 microns, respectively. A combined host material and sensitizer which will provide intense coherent radiation in the vicinity of 2.5 and 2.6 microns, and which absorbs energy in the vicinity of 1.2 to 1.3 microns, will be employed as one set of materials for concentrating energy and applying it to water vapor. The particular host material and sensitizer which provides this wavelength of absorbing heat energy and radiating energy is calcium fluoride CaF.sub.2 as the host material, and uranium-3 as the sensitizer. Before considering FIGS. 11 and 12 some background relative to the phenomena which are taking place will now be included. nitially, it may be noted that the theory of Masers and Lasers of course forms a background for the present invention. The word "LASER" is an acronym which stands for the Light Amplification by the Stimulated Emission of Radiation. Although related to some extent to Maser and Laser theory, the present invention does not involve the intense collimated beams of energy characteristic of Masers and Lasers; and of course, Masers and Lasers do not derive their energy from a heat reservoir made up of a body of material at elevated temperatures. Types of Radiation There are two separate processes by which a material can become a generator (or producer) or radiation energy after absorbing suitable quantities of primary energy. In the first process the absorbed energy is converted (degraded) into a low-quantum-energy heat that diffuses through the material which then emits radiation called thermal radiation. n the second process an appreciable part of the absorbed energy is temporarily localized as relatively high-quantum-energy excitation of atoms or small groups of atoms which then emit radiation called luminescense radiation. Specifically, "luminescense" is a process whereby matter generates nonthermal radiation which is characteristic of the materials involved and not the temperatures. Sometimes, however, the radiation as generated is also called "luminescence". It is in fact luminescense only when the radiated energy is in excess of the thermal radiation produced by heat. Thermal radiation from solids is generally a broad continuous spectrum of radiation, especially infrared, which is emitted in increasing amount as the temperature of the solid is increased.

The quality and quantity of thermal radiation depend almost exclusively on the temperature rather than the nature of the emitting solid material. Broadly and objectively speaking, luminescence describes emission of radiation (of subatomic origin) in excess of thermal radiation; that is, luminescence yields photon emission in excess of the photon emission produced entirely by thermal agitation. Luminescence is generally excited by primary photons or charged material particles having individual energies ranging from about 2 ev to over 10.sup.6 ev and affords emitted photons with energies in excess of 1 ev. When luminescence is excited by energy liberated during chemical reactions, the liberated energy per emitting atom or molecule usually exceeds 1 ev. These excitation energies are hundreds to millions of times greater than the energies of individual phonons in solids. A single phonon can increase the energy of an electron or atom in a solid by at most a few hundredths of an electron volt, whereas the individual primary particles normally used to excite luminescence can provide energy increases up to the total amount of energy carried by the primary particle (except for rest-mass energy), that is, tens to millions of electron volts. In order to obtain barely visible emissions of thermal radiation from a solid, the temperature of the solid must be raised above 900.degree. K. to obtain an appreciable probability of getting 1.7 ev (or greater) electronic excitations by the cumulative action of phonons.

The thermal radiations from real solids cannot exceed the emission which would be obtained from a perfect black body at the given temperature and frequency. Most solids emit somewhat less thermal radiation than the maximum which is expressed by: he peak wavelength .lambda.pk of the broad emission band of black body radiation is inversely proportional to T, according to WIEN'S displacement. the TOTAL THERMAL EMISSIVE POWER P.sub.T of a perfect black body increases as T.sup.4, according to the STEFAN-BOLTZMANN LAW: At room temperature (about 200.degree. K.), lambda.pk is in the far infrared at 97,000 A, and P.sub.T is only 4.6 .times. 10.sup.5 erg cm. sup.-2 sec .sup.-1, so that there is not an appreciable amount of radiation in the VISIBLE region between 4000 and 7000 A. At the temperature of an incandescent lamp filament (about 2800.degree. K.), lambda.pk is about 10,000 A, and P.sub.T is 3.5 .times. 10.sup.9 erg cm. sup. -2 sec.sup.-1, so that there is an appreciable emission in the visible part of the spectrum. In the temperature range between about 700.degree. and 1000.degree. K. there is an overlapping of feeble luminiscence and feeble incandescence.

The present invention involves temperatures from a lower limit of about 900.degree. to 1000.degree. Kelvin or about 600.degree. to 700.degree. Centigrade and ranges upward from these temperatures with the upper limit controlled only by the strengths of the materials utilized (1) as the reactant or host/sensitizer, (2) for the reaction chamber, and (3) for the tanks, tubing, etc.

The Maser/Laser type of acronym may also be applied to another system termed "Haser", an acronym for "Heat Amplification by Stimulated Emission of Radiation." As will be developed below, however, the term "Amplification" is not used in the sense of increasing signal strength, but in the sense of amplifying the effectiveness of heat energy. The Haser application depends not as much on coherence or monochromaticity per se, but rather on the unprecedented energy per unit area. This radiated energy is a by-product of the coherence of the radiation, and can be many orders of magnitude greater in energy than normal incoherent thermal radiation. To understand why this is possible, it is necessary to review briefly a few of the basic differences between the incoherent radiation produced by an ordinary bright source and the coherent light (radiation) produced by a laser or maser.

In a conventional source the atoms of a solid (or a gas) are agitated either thermally or electrically to higher energy states. When these atoms return spontaneously to their lower levels, they radiate some of their excess energy as light. Since each atom behaves independently at this state, its emission is at a random time and in a random direction with a random polarization.

It follows that the light radiated in a single direction is the complex sum of all the light from the individual atoms. The phases of any two atoms will tend to cancel their radiation in some directions and enhance it in others. The total energy of the source will be on the average be radiated uniformly in all accessible directions, and the amount of energy observed in a given direction will be proportional to the solid angle subtended by the observing device. In the Haser interior the observing device is either a water-vapor molecule (or other feedstock) or another particulate of reactant.

The maximum total energy that can be radiated by a given source depends on two factors: the surface area of the source and the maximum temperature to which the source has been heated. Therefore, in practice, the only way to increase the power output from an ordinary source beyond the limitations imposed by the source material is to increase the surface area of the source.

Power output, however, is only half the solution. Concentrated power is much more important than power itself. A 40-watt fluorescent lamp, for example, produces more light than a 40-watt incandescent lamp, but the fluorescent lamp is not nearly as effective as the incandescent light source for a spotlight.

Now, in a laser or maser, the energy is also emitted when atoms drop from a higher energy level to a lower one; however, in this case the atoms are triggered and emit radiation (to a large percentage) in unison. In the case of the Haser, the atoms are triggered to emit radiation in unison by phonon/photon waves within the unit cavity or cell interior. Enough of the energy previously generated is retained within the mass of particulates to maintain emission in a compatible phase, polarization and direction. This phonon wave interacts with the excited atoms and causes them (to a large degree) to emit their excess energy in phase with the stimulating wave before they have a chance to do it randomly.

As a result, the Haser generates a good percentage of its radiated energy so that it travels in synchronism with the standing phonon waves, therefore concentrating the energy emitted as photons. In effect, the radiated photons from the Haser particulates are all relatively concentrated, monochromatic, and therefore, relatively coherent energy sources. This results in an excellent energy density even though the photons are traveling in practically an infinite number of directions, due to the fact that the particulate sources number in hundreds of millions. The photons moving from particulate to particulate impact and are absorbed by other particulates. Then, this STORAGE, BUILD-UP, AND RELEASE of the "phase and amplitude of radiated energy," combined with the fine particulate geometry of the Haser power (energy) source, which provides surface area to emit photons in extremes, allows a "maximum efficiency utilization" of the radiated energy within the Haser cavity. The act of controlling the spectral emissions to most effectively dissociate (for example) water vapor, by sensitizing the host compound properly is another very important point. The monochromatic waves may become distorted in passing through substances, so that harmonic waves are generated at two or more times their original frequency. Infrared wavelengths may be converted into visible light, and visible light into ultraviolet waves. This new system utilizes fine (small) particulates of solids comprised of oxides which are predetermined by design within which some of the host atoms are replaced by other frequency sensitive atoms also predetermined by design, which, provide stimulated absorption and emission at predetermined wavelengths. An ohmic (or other) pre-heat provides to the heat reservoir mass the original energy to liberate a massive volume of photons at the frequency range which will activate the sensitive atoms included in the host compound; the fine multi-faceted particulates absorb the photons which normally proceed as phonons through the particulate to generate and provide large numbers of cavity resonances which stimulates emission with each internal excursion; therefore, again, the gain by this regenerative amplifier when driven by the thermal noise fluctuations from the cavity walls, can be significant.

In the case of the HASER, the principle emissions of radiation designed and produced to dissciate the chemical product may be emitted from the woven wire mesh cavity balls or cells 260 (FIG. 8) that fill the entire Haser cavity. The "preheat" energy can be electrical and inserted (through resistance heaters) into the internal cavity or the heaters may also be external to the cavity and heat the mass by conduction and radiation through solids. Also, the "preheat" energy may be inserted by combusting suitable fuels such as hydrogen, hydrogen peroxide, alcohol, and other hydrocarbons, directly in the internal cavity of the unit or within a "center-core" burning unit as is designed into the unit of FIG. 9, for example. As the reactive mass reaches temperature levels which excite the molecules and atoms to a radiating level of energy, phonons and photons evolve which distribute the thermal energy within the mass. Incidentally, relative to the use of the terms "photon" and "phonon", when a phonon traveling through space impinges on a solid, the resultant wave in the solid is termed a "phonon".
The ability of `atoms` to store energy has to do with the electrons within the individual atoms. The electrons exist as a cloud of negative charge around the positively charged nucleus. Each election occupies a state of energy and angular momentum that cannot be occupied by any other election. Therefore, the electrons tend to fill stable shells surrounding the nucleus.

The electrons of the outermost shell are the ones most easily affected by outside forces because of their accessibility. These outer electrons can be moved to higher energy states, but they always tend to return to their lowest energy state: the ground state. Electrons at certain levels decay (fall to a lower state) more easily than electrons at other levels.

Each excited electronic state of the atom has a characteristic lifetime that indicates the average time it takes an electron to fall to a lower level and therefore radiate a photon. Most excited states have lifetimes of about 10.sup. -8 second.

There are some excited states or levels in all atoms in which the electron cannot decay easily by giving up a photon. Such atoms must therefore wait for other means of giving up their energy, such as colliding with other atoms or with the walls of the system. Electrons in this state of energy tend to stay there for relatively long periods of time (0.001 second or more), and are referred to as being in metastable states. This is an important part of the storing of energy, which can then be retrieved in the excitation process by stimulation.

The normal radiative decay from a higher electronic state to a lower one is termed spontaneous emission. As discussed earlier, processes exist that can force an atomic electron to a higher state or stimulate it to jump to a lower state. An example of forcing, as discussed earlier, is provided when a photon collides with an atom and excites the outer electron to a higher level, which can happen when the energy or wavelength of the photon corresponds exactly to the difference in energy between the state the electron is in and some higher possible state. This process is known as absorption because the photon (energy) is actually absorbed by the atom and all the photon's energy goes into raising the electron to a higher state.

Similarly, as discussed earlier, the stimulated electron can move to a lower level, provided that such a level exists and that the difference between the two levels corresponds to the energy of the incoming photon exactly. The energy given up by the electron in jumping to a lower state goes into creating an additional photon with the same characteristics as the colliding photon.

A large number of atoms can provide an increase in the radiated energy at the desired frequency or energy level, if the population of electrons in the excited states of the atoms is suitably arranged. Consider two excited levels of a system of identical atoms with the electrons divided between the upper and lower levels. If a radiated photon having a wavelength corresponding to the difference in energy between the two levels is allowed to pass through the system medium, it will be amplified if there are more atoms with electrons in the upper state and absorbed if there are more atoms with electrons in the lower state. The condition of having more atoms in the upper state is called a "population inversion" (because it goes against the normal processes of nature, which tend to keep more electrons at lower energies than at higher energies).

The search for new Haser "systems" is therefore not easy, because one is working against the natural tendencies of the electrons. Another important consideration is the actual `lifetimes` of the ion energy levels of the impurity atoms involved in the population inversion. The upper level of a two-level system with a population inversion radiates energy corresponding exactly to the difference between the two levels. The electrons that have thus yielded energy by radiation, end up at the lower level. If they remained there, the situation would result wherein there would be more atoms at the lower level than at the upper level, and as discussed earlier, there would be absorption instead of gain. For continuous operation, one must find impurity atoms with combinations of levels such that the lower level has a short lifetime and the upper level is preferentially populated. This necessity rules out the ion ground state as a possible Haser level, since all ion ground states are metastable. The pair (or more) or ion energy levels which will provide amplification must be energetically above the ground state but still below the metastable states. Although the original gas laser utilized electrical excitation of electronic transitions, later versions use vibrational transistions in molecules such as carbon dioxide, and the excitation mechanism may involve electrical or chemical excitation, or the burning of fuel. In the chemical laser, atomic species such as hydrogen and fluorine can be reacted to produce molecules in an excited vibrational state which in turn yields amplification or oscillation.

An entirely new excitation process was announced by Garry in 1970. In this, the gas dynamic laser, an appropriate fuel is burned to produce carbon dioxide and nitrogen at high temperature and pressure. When released through a nozzle into the optical resonator region, the gas cools rapidly in terms of its kinetic or translational energy, but the population of the vibrational energy levels of the carbon dioxide molecules becomes inverted since the lower level of the laser transition relaxes more rapidly. In addition, the vibrationally excited nitrogen molecules are in near resonance with the upper laser state of the carbon dioxide and transfer energy with high efficiency to maintain the inversion. This type of `laser` has produced continuous powers as high as 60 kw.

The HASER phenomenon as utilized in the present invention, actually uses a thermochemical excitation mechanism. The original preheat energy prepares the reactant material within the reaction chamber by bringing the material to photon emitting temperatures.

When water vapor is introduced into the chambers of FIGS. 1 and 8, for example, the excited billions of photons emitted and traveling between particulates, strikes the sensitized "Cavities" with a barrage of photons designed to provide frequency, amplitude, and steric factor impact adequate to dissociate the H.sub.2 O molecules. On dissociation, the 2H.sub.2, and O.sub.2 molecules are vibrating at very high temperatures and pressures which are compatible with recombining these molecules through the "activated complex" mechanism into their (high temperature) preferential H.sub.2 O.sub.2 + H.sub.2 molecules, which incidentally evolves more than 33 KCal/mole heat energy. As the steam enters and traverses the cavity, an amount of the steam (depending upon the design of the contents of the reactor chamber and the relative amount of reactant, manganese oxide or other similar metal oxide, and the host/sensitizer material), combines with the reactant, which raises the oxidation level through the process of oxidation; and this of course, evolves heat energy (because this is an exothemic reaction), which, broadcasts more photons of energy throughout the cavity interior, to react with the sensitizers and activators; and this in turn creates massive amounts of new photons of energy to dissociate the H.sub.2 O vapor and maintain the reaction temperatures within the host materials. Haser Cavities Referring again to FIG. 8, the cavities 260 can be fabricated of very fine mesh woven wire, which is cut into small sections, stamped, folded, and the outer edges of the wire mesh are secured together to form a hollow cell. The wire, of a diameter approximately equal to 0.002 inch, is made up of the elements, compounds, and a metal carrier (inert to the process), and is initially woven and formed into the cells as described above. It is then transformed into the desired host and sensitizer materials through oxidation in an atmospherically controlled furnace or kiln. Ceramic Haser Tubes

Instead of the wire mesh cells 260 as shown in FIG. 8, the preferred form of Haser cavity is shown in FIG. 11 in which a large number of ceramic tubes 352 are present. These tubes are preferably extruded from mullite, which is a common clay having the approximate chemical structure of 2Al.sub.2 O.sub.3 .multidot.SiO.sub.2 with a range to 3Al.sub.2 O.sub.3 .multidot. 2SiO.sub.2. Suitable quantities of host and sensitizer materials, as described below, are added to, and thoroughly mixed with the mullite prior to extrusion. Subsequent to extrusion the tubes are fired in a suitable kiln or furnace. The tubes may suitably have a diameter of about 1/4 inch or 1/2 inch and be from 1 to 12 inches in length. The sidewalls may suitably be from 1/32 to 1/16 of an inch in thickness, but none of the foregoing dimensions are critical. After firing, the tubes 352 are provided with filters 354 in both ends. The filters may be of any suitable structure, for example, several layers of metal gauze, to prevent the intrusion of the reactant 356 which may, for example, be manganese oxide. In practice the ceramic tubes 352 with their associated filters 354 may be initially placed in one of the reaction chambers such as reaction chamber 302, 304, 306, and 308 of FIG. 9, or the chambers 126 of FIG. 1; and then powdered metallic manganese or manganese oxide may be poured in and the entire unit vibrated until the manganese oxide 356 as shown in FIG. 11 fills all the space around the ceramic tubes 352. With this arrangement, of course, the water vapor is present within all of the ceramic tubes 352; heat is provided by the manganese oxide 356; and radiation from the host/sensitizer combination forming part of the ceramic walls 352 radiates intense coherent energy in one or more of the absorption bands of water vapor; and this intense radiation serves to dissociate the hydrogen and oxygen atoms making up the water vapor molecule. The foregoing action is shown diagrammatically in FIG. 12 in which the tube 352 is shown centrally located and the surrounding particles of manganese oxide 356 are shown radiating broad spectrum thermal radiation 358 in all directions including into the ceramic tube 352. The water vapor particles 360 shown as small circles within the tube 352 may be directly impacted by the coherent radiation 362 which is emitted by the host/sensitizer combination included in the walls of ceramic tubes 352. It may be noted, that for convenience in illustration, the manganese oxide particles are shown spaced apart in FIG. 12; however, in practice they would be filling all of the space within the reaction chambers which is not filled with the ceramic tubes 352. Host/Sensitizers for Water Vapor Feedstock

In the tabulation which will be set forth below, suitable host materials and sensitizers for applying radiation to water vapor will be set forth. In this tabulation the chemical symbols for the elements will be employed, and the host material will be listed first followed by the sensitizer material. In each case the absorption band for the host material will initially be given and then the emission wavelength of the sensitizer will be sent forth. Following the tabulation, the absorption characteristic of water vapor as shown in FIG. 10 will be reviewed and the relationship of the emission lines of the sensitizers to the absorption bands of the water vapor will be discussed.

In the foregoing tabulation it may be noted that there are only three separate combinations of host and sensitizer materials which are being employed. More specifically, the combination of calcium tungstate and neodymium produce output radiations both at 1.065 microns and also at 1.3372 microns as set forth in examples (a) and (b). It may be noted that the absorption wavelengths for the two output emissions differ correspondingly. The combination tabulated in examples (c) and (d) set forth above include yttrium aluminum oxide as the host material and erbium as the sensitizer. In this case, the emitted radiation for both (c) and (d) is at 1.6602 microns; however, the absorption for the two examples is at different frequencies. The final example (e) using calcium fluoride as the host material and uranium-3 as the sensitizer was mentioned above. With regard to the matching of the emitted radiation from the sensitizers with the absorption bands shown in FIG. 10 for water vapor as a feedstock, the high absorption band for water vapor extending from about 2.4 microns to about 3.1 microns is well located to receive emitted energy in the 2.5 microns to 2.6 micron wavelength region from example (e) tabulated above. With regard to examples (a) through (d), a cursory review of the emission wavelengths and the corresponding moderately sharp absorption bands between 1 and 2 microns would indicate that there is not necessarily an exact correspondence. However, it has been determined that there is a certain amount of broadening of the radiation and of the absorption characteristics which occurs at high temperatures; accordingly, with the basic location of the emission lines and the absorption points as indicated in the above table and in FIG. 10, the practical result is good coupling from the emitted radiation to the water vapor molecules at the 1,000.degree. Kelvin temperature at which the system is operative. With regard to the relative quantities of the host and sensitizer material in the mullite, the quantity of host material should be approximately 25 to 1,000 times greater than the amount of associated sensitizer material. A ratio of approximately 0.5% of sensitizer of the amount of host material is the general order of magnitude which should be employed. In addition, the quantity of each particular category of host and sensitizer material such as those set forth in the tabulation of combinations (a) through (e) set forth above, should be proportioned to the absorption bands of the feedstock which is being irradiated. Thus, in the particular example under consideration, where the host/sensitizer combination (e) using calcium fluoride and uranium-3, is matched to a broad absorption band of water vapor, a larger quantity of this host/sensitizer combination should be employed as compared with combination (a), (b) and combination (c), (d). Thus, in the making of the ceramic tubes, the material which is being prepared might include approximately 88% by weight of mullite, 8% by weight of the host/sensitizer combination (e), and 2% by weight of each of host/sensitizer combinations (a), (b) and (c), (d). Similarly, in the event that the wire mesh is employed, the host sensitizer/sensitizer combinations may be added in the same proportions to stainless steel wire and the combination material drawn into wires and formed into mesh. Alternatively, after the preparation of the stainless steel wire cells, mullite together with the host sensitizer combinations could be applied in several bands in the plastic state around the stainless steel wire mesh cells, and then fired, to produce the desired result. This result, as mentioned above, involves the provision of spaces throughout a body of material constituting a heat reservoir, and locating host/sensitizer combinations around the boundaries of these spaces or voids in the material.

The chemical formula for mullite was given above, and it is again noted that mullite includes aluminum oxide Al.sub.2 O.sub.3 and silicon dioxide SiO.sub.2 in certain proportions noted above. In order to enhance the "HASER" action and increase the energization of the host/sensitizer combinations (a) through (e) set forth above, a material such as chromium, which acts as a sensitizer in cooperation with the aluminum oxide in mullite which acts as the host material. The chromium-aluminum oxide, sensitizer-host combination produces strong output radiation at a number of wavelengths, including output radiation centered at 0.6934 microns, when the Al.sub.2 O.sub.3 is absorbing energy at 0.5 microns. The radiation centered at 0.6934 is broadened at the high operating conditions so that the radiation extends from 0.6 or 0.65 to 0.75 or 0.8 microns, thus providing supplemental input energy to example (a) set forth hereinabove, which involves absorption at about 0.74 to 0.76 microns. The Al.sub.2 O.sub.3 /Cr combination may also directly apply energy to the feedstock when the output radiation is of the proper frequency and may also pump other host/sensitizer combinations. When chromium is used it will be present in quantities in the order of five percent by weight or less of the mullite employed as the basic material of the tubes 352 as shown in FIGS. 11 and 12. Material Requirements

The primary requirements for potential solid-state Maser/Haser materials are, first, that the composition should fluoresce with a suitably high intensity at elevated temperatures by means of thermal energy alone and, second, that the matrix should be transparent or has no absorption transition at the operation frequency; it should also be chemically stable and have no caustic characteristic.

Preferably, the terminal level of the Haser transition of the active ion should be far enough above the ground state so that three of four-level operation is possible and at elevated temperatures.

The lifetime of the metastable level from which the Haser transition originates should be, insofar as possible, equal to the lifetime for spontaneous emission with no constraints imposed by competitive dissipation to the matrix. In four-level operation the lifetime of the terminal level of the transition must be smaller than that of the metastable level; otherwise, a suitable excess population in the upper level cannot be maintained.

This condition is generally obtained when the terminal level lies in the phonon absorption region, preferably between 6000 and 19,000 cm.sup.-1. In addition, it is helpful for the excited active ion to be unable to absorb photons corresponding in energy to the Haser transition. Where such absorption into a higher level or band is possible, the photon/phonon flux in the particulate cavity is reduced and the metastable level depleted.

For best coherence the active ions should occupy equivalent positions in the host structure, so that there will not be a multiplicity of spectra. When these ions are in completely unique sites, the emission spectrum has the minimum detail and line width consistent with the site symmetry, the crystal field, and the active-ion concentration. In general, the higher the site symmetry the more degenerate the electronic states of the active ion. Therefore, fewer distinct transitions should be observed in fluorescence and, on the average, each emission transition should flouresce a greater portion of the absorbed energy. However, there are also fewer distinct absorption transitions, and certain emission transitions may be favored in a low-symmetry environment. As long as the emission transitions are few in number, the low symmetry environment may prove to be advantageous by virtue of a broader absorption coverage.

Different classes of active ions seldom find optimum environments in the same host structure. Different activator ions are best accommodated in oxides or fluorides, where the cations of the matrix are approximately equal in size to the activator. Al.sub.2 O.sub.3, MgO, MgFl.sub.2, and ZnF.sub.2 are typical matrices for transitionmetal ions, CaF.sub.2 is particularly useful for divalent rare-earth ions, and CaWO.sub.4, LaF.sub.3, and Y.sub.2 O.sub.3 are best suited for trivalent rare-earth ions for lasers. Y.sub.3 Al.sub.5 O.sub.12 can readily accommodate both trivalent rare-earth ions and trivalent 3d transition-metal ions. Certain crystals have conveniently disposed matrix absorption bands and these can be used to absorb pumped radiation over a broad spectrum.

The excitation may be subsequently transferred to trivalent rare-earth ions contained in the matrix and therefore, greatly enhance the overall efficiency of fluorescence. It probably is essential to move into the visible region, to obtain continuous operation for molybdates or niobates.
In comparison, materials which have their matrix absorption edges well above the excitation range but absorb strongly as a result of the active ions having strong absorption bands of their

own, together with narrow emission lines, can afford very favorable pumping conditions. Ions such as, Cr.sup.3+, Chromium, and, Dy.sup.2+, Dysprosium offer this advantage.

The past decade has provided rapid extension of spectral measurements and theoretical analysis, such that the properties of most of the divalent and trivalent activator species are well understood. The interest in solid-state masers and lasers, has motivated the preparation of various crystals containing divalent rare-earth ion species and the extensive study of their infrared characteristics. Parallel studies of the infrared properties of the transition-metal ions and trivalent rare-earth ions have been equally productive. The selection of materials for Hasers which will operate in the infrared region depends on the disposition of the vibrational bands in the matrices. Because vibrational levels may drain an electronic state, they should not be too close below the metastable level, or the latter should lie below the vibrational levels in energy. Suitable coupled pairs which provide a mutual cross relacation can also be used advantageously to minimize loss of efficiency due to fluorescence from levels lying higher than the metastable level of interest and loss to the phonon spectrum. It is also desirable to increase the efficiencies of masers that terminate on phonon levels. This mechanism of operation offers the possibility of a maser that can be tuned over a broad range of frequencies.Preferred Lattices

Oxygen-dominated compounds are those in which oxygen is a major chemical constituent of the host lattice. They may be classified according to their chemical composition into four groups. The first group, comprising the simplest compounds, has the generic formula M.sub.x O.sub.y, representative numbers being the alkaline earth oxides and Al.sub.2 O.sub.3, Y.sub.2 O.sub.3, and ThO.sub.2, with Cr.sup.3+, Mn.sup.2+, and the rare earths as common activators. Other compounds included in the generic formula are CuO, and ZnS and the other II-VI wide-band-gap compounds. The second and largest group are the binary oxides, M.sub.x A.sub.y O.sub.z, where M is any element of Group II, A or B, and Period 2 to 6, and A is Ti, Zr, V, Nb, Mo, B, Al, Si, Ge, P, As, Sb, or S. In many cases x = 4y, the oxygens nearly tetrahedrally arranged around the multivalent atom, A. The common activators are Mn.sup.2.degree., Mn.sup.4+, Ag.sup.+, Sn.sup.2+, Tl.sup.+, Pb.sup.2+, and the rare earths. Included in this group also are the well-known self-activated compounds comprised of tungstates and molybdates, which are commonly called scheelites (although some do not have the scheelite structure). These require no activating impurity, because the energy transitions take place within the anion, although impurity-activated luminescence is also observed. Of the impurity-activated members of the binary oxides, the borates, phosphates and silicates are the most numerous. Ternary systems, M.sub.x A.sub.y B.sub.y O.sub.z, constitute the third category. M and A and B are the elements listed in the binary systems plus the alkali metals. The most common activators, other than the rare earths, are those listed with the binary oxides. There are a few ternary compounds not containing tungsten or molybdenum which are believed to be self-activated. There are many other oxygen-containing inorganic luminescent solids, including a large number of rare-earth salts and impurity-activated nitrites, carbonates, etc. The work on the latter is largely incomplete. The work on the rare-earth salts constitutes a well-studied separate discipline (Diecke et al, 1961). Considering the small number of possible combinations of simple oxides and activators, it is surprising that new prospects in this group continue to be found. New compounds, however, consisting of oxides of antimony, germanium, thorium, calcium, strontium, yttrium, and gadolinium with various activators have been developed over the last few years.
The valence of manganese in phosphors or compounds is interesting because of its use as an activator in many lattices. Kroger (1948) showed that the broad structureless red or green

emission spectra of manganese-activated compounds is generally due to Mn.sup.2+, whereas the red narrow-banded emission is due to Mn.sup.4+.

SUMMARY

In the same way that the spectroscopy of atoms provided basic information on atomic structure, careful study of controlled luminescence of solids provide information on band structures and energy levels of impurities and imperfections. In some cases, the spectra of impurities yield, through the application of crystal field theory, information on the symmetry and strength of the crystal field at the impurity site. The absorption or excitation spectra involve electronic states of the system with equilibrium nuclear coordinates characteristic of the ground state; luminescent emission spectra involves electronic states with the equilibrium nuclear coordinates of the emitting state. Additionally, detailed theoretical knowledge of band structure and of impurities and imperfections obtained from semiconductor and photoconductor research provides understanding of the luminescence of these materials. Luminescence is generally investigated as a steady-state phenomenon, wherein the compound interacts with the excitation source and emits radiated energy continuously. The thermodynamic parameters of the compound remain time independent at every point in the system, despite the occurrence of excitation, emission, and dissipative processes. Irreversible thermodynamics is concerned with just such open systems, which interact with their environment in a stationary way. It is a principle of irreversible thermodynamics that the entropy production is positive in every macroscopic region of the system undergoing irreversible processes. Macroscopic regions refer to regions large enough for microscopic fluctuations to exist but small enough for approximate equilibrium to exist within each region. We are especially interested in the more complex excitation mechanisms involving energy transfer between different macroscopic regions not in equilibrium with each other. Light Absorption and Color An electromatic radiation, (such as radiowave, light, and X-ray) can be characterized by its particular wavelength, LAMBDA, lambda. (measured in cm or A), or by its wave number, NU, .nu. (the reciprocal of the wavelength), .nu. = a/. lambda. commonly expressed in reciprocal centimeters, cm.sup.-1. Each unit of radiation (a photon) corresponds to a quantum of radiant energy, E, which is directly proportional to the wave number, .nu.. Since chemical calculations are founded on a mole basis, in discussing the relationship between radiant energy and chemical processes (responsive activators and hosts) it is convenient to express radiant energy in kcal/mole of photons. We can do so with this accepted relationship: the radiant energy in 1 mole of photons, with .nu. = 350 cm. up. -1, is equal to 1 kcal.

Therefore, we can obtain the energy (expressed in kcal/mole) for photons of a given wave number simply by multiplying the value of .nu. expressed in cm. sup. -1 by the conversion factor ##EQU1##

For example, the energy of light photons with .nu. = 20,000 cm.sup.-1 is: ##EQU2##
The wave number, and the energy, of electromagnetic radiations varies within an extremely wide range -- .nu. = 10.sup.14 cm.sup.-1 for the .gamma.-rays emitted in nuclear reactions to .nu. = 10.sup.-6 cm.sup.-1 for radiowaves. In between these two extremes, there is a continuum of radiations of intermediate wave numbers -- the "visible region", which extends approximately from 27,000 cm.sup.-1 to 13,500 cm.sup.-1. In general, when white light strikes a substance, part of the light is absorbed and part is transmitted (if the substance is transparent) or part is reflected (if the substance is opaque). A substance may absorb preferentially the light photons of one (or more) region(s) of the spectrum, so that the transmitted light or the

reflected light is relatively richer in the radiations of the remaining regions. The combined effect of these remaining radiations is observed as a particular color (when it is in the visible spectrum). For example, a substance that, when exposed to white light, absorbs almost all photons in the entire yellow - to - violet region (say from 17,000 to 27,000 cm.sup.-1) will "appear red", because only the radiations in the red region of the spectrum (13,500 to about 17,000 cm.sup.-1), which are not absorbed, remain to be observed. Similarly, a substance that "appears yellow" absorbs photons of both the green-to-violet region (from 19,000 cm.sup.-1 to 27,000 cm.sup.-1) and the red region (from 13,500 to 16,000 cm.sup.-1) of the visible spectrum. Since light (radiation) is energy, the absorption of radiation is absorption of energy; it is well known, that, if a substance absorbs light, the corresponding absorbed energy may be used to promote certain atoms, ions, or molecules of a substance from "ground-state" to an "excited state". For example, an atom, ion, or molecule which absorbs a photon of a given wave number takes on a `quantun` of energy that may serve to promote one electron from a lower energy orbital to a higher (available) energy orbital. In general, different electronic transitions involve the absorption of different quanta of energy. Haser Design Considerations Some of the factors which are involved in the design of Haser apparatus include the following:

(a) Thermally isolated chamber.
(b) Sensitizers-activators responsive to input heat-energy frequencies.
(c) Design amounts of "impurity" sensitizers required.
(d) Design the host solid while considering the following:

(1.) Lattice Vibrations
(1.1) Geometry of crystalline solids.
(1.2) Crystal lattice and reciprocal lattice.
(1.3) Brillouin zone and g-space.
(1.4) Lattice vibrations of an infinite crystal with one atom per unit cell.
(1.5) Lattice vibrations of a finite crystal with one atom per unit cell.
(1.6) Lattice vibrations of a crystal with more than one atom per unit cell.
(2.) Thermodynamics of Phonons
(2.1) Density matrix of an ensemble
(2.2) Internal energy of a phonon gas.
(2.3) Einstein and Debye approximations of the density of (A) phonon states.
(2.4) Phonons and photons; similarities and differences.
(3.) Ion-Photon Interaction: Absorption and Emission of Radiation
(3.1) Ion-radiation interaction.
(3.2) Expansion of the interaction hamiltonian. Different types of radiation.
(3.3) Density of final states
(3.4) Transition probability per unit time.
(3.5) Dipole radiation.
(3.6) Selection rules for radiative transistion
(3.7) Selection rules for transitions between eigenstates of angular momentum.
(3.8) Selection rules for atomic systems.
(3.9) Electric dipole radiation.
(3.10) Magnetic dipole radiation.
(3.11) Electric quadrupole radiation.

(3.12) Selection rules for ions in crystals.
(3.13) Intensities of radiative transitions
(4.) Ion-Vibration Interaction: Radiationless Processes, Thermal Shift, and Broadening of Sharp Spectral Lines
(4.1) Ion-vibration interaction.
(4.2) Radiationless processes in a crystal-absorption and emission of a phonon.
(4.3) Raman processes.
(4.4) Orbach processes. (4.5) Multiphonon processes.
(4.6) Line broadening mechanisms
(4.7) Probability densities and superposition of probability densities: Voigt profile.
(4.8) Thermal broadening of sharp lines.
(4.9) Raman scattering of phonons
(5.) Vibrational-Electronic Interaction
(5.1) Ion-vibration interaction in molecular complexes.
(5.2) Vibronic spectra of molecular complexes.
(5.3) Vibronic lines in absorption.
(5.4) Selection rules for vibronic processes.
(5.5) Space groups and lattice vibrations.
(5.6) Normal modes of vibrations in crystals.
(5.7) Lattice absorption in perfect crystals.
(5.8) Phonon activation due to impurity ions in crystals.
(5.9) Selection rules for vibronic transitions due to magnetic impurities in crystals.

Specific Examples

Some underlying principles involved in the selection of Haser systems have been set out hereinabove and a preferred embodiment has been described which involves water vapor as a feedstock and the generation of hydrogen and/or hydrogen peroxide. It is to be understood that the Haser concept is not limited to the specific embodiment described herein but has more general applicability in the conversion of broad spectrum heat energy or radiation to particular frequencies which lie within the absorption band or bands of any selected feedstock.

The feedstock may be gaseous or liquid or even a slurry, and may be brought into proximity with the heat reservoir and associated host and sensitizer material in any desired and practical manner. The heat in the heat reservoir may be generated in any suitable manner including the use of the exothermic reactor for generating hydrogen and hydrogen peroxide and/or the combustion of the hydrogen and hydrogen peroxide.

The feedstock may for example be directed through the heat reservoir by a pipe suitable coiled to provide for adequate exposure to the radiation. The pipe may be transparent to the radiation being applied to the feedstock; or alternatively, the pipe may be made of material containing the specially selected host and sensitizer material.
In the following examples, a number of reactions are set forth and these are followed by an identification of a host and sensitizer material which will concentrate the broader spectrum heat energy to one of the absorption bands of the feedstock. Incidentally, in the following examples, in addition to the standard symbols for the elements, the following abbreviations are used: Et for ethyl, C.sub.2 H.sub.5 ; Ph for phenyl, C.sub.6 H.sub.5 ; Pr for propyl, C.sub.3 H.sub.7 ; and Bu for butyl, C.sub.4 H.sub.9. In addition to the host and sensitizers shown in

each of the following examples, Al.sub.2 O.sub.3 in mullite and Cr +3 may advantageously be used (absorption at 0.5 microns; emission centered at 0.6934 microns). As noted above, the mullite may conveniently be employed to physically support the host and sensitizer materials.

The actual examples follow.
FIG. 13 is a schematic showing of an apparatus for a continuously processing feed stock such as the materials disclosed in the foregoing examples, or steam, of course. In FIG. 13 the reaction chamber 402 is provided with upper and lower manifold chambers 404 and 406 which are separated from the main portion of the reaction chamber 402 by apertured plates 408 and 410. Within the reaction chamber 402 are a large number of the ceramic tubes 412 such as those shown in FIG. 11. All of the space within chamber 402 apart from that occupied by the tubes 354 is filled with a reactant such as manganese oxide or other reactants disclosed elsewhere in the present case and in my prior co-pending specification cited above.

A heat or radiation exchanger including upper and lower manifold structures 414 and 416 as well as the interconnecting tubes or pipes 418 exposes the feed stock, which is applied through input tube 420 and brought out through tube 422, to the high temperatures and radiation present within the main reaction chamber 402.

At the center of the apparatus shown in FIG. 13 is a burner 424 to which a lower inlet pipe 426 and an upper outlet pipe 428 are connected. This central burner unit may be of the type shown in FIG. 9 of the drawings and as described hereinabove. The entire reaction chamber 402 shown in FIG. 13 is fully insulated and mounted as shown in FIG. 9, and equipped with suitable automatic valving of the type described above in connection with other embodiments of the invention.

In operation, steam is initially supplied to the reaction chamber 402 through inlet line 430 when valve 432 is opened. Of course prior to this initial step, the reaction chamber 402 has been preheated to a temperature in the order of 1000.degree. Kelvin, and the steam is supplied under high pressure. Hydrogen is then displaced by the action of the reactant, and the host/sensitizer materials included in tubes 412, as described above. Hydrogen H.sub.2 and hydrogen peroxide H.sub.2 O.sub.2 are drawn off through the upper manifold 404 and the connecting line 434 through value 436. During the hydrogen displacement phase of the cycle, additional oxygen may be supplied through line 438 via valve 440. The additional oxygen promotes the formation of hydrogen peroxide, which is, with the hydrogen, drawn off through line 434.
The overall cycle of reaction chamber 402 may be substantially as indicated by one of the two plots shown in FIG. 7. Accordingly with the steam valve 432 and the valve 436 to the hydrogen storage tank both closed, the vacuum may be applied to the reaction chamber 402 so that disproportionation of the oxygen from the reactant takes place.

While the hydrogen displacement at high pressure and the oxygen disproportionation phase of the cycle at low pressure is occurring in the main reaction chamber 402, the feed stock may be continuously passed through the heat and radiation exchanger 414, 416, 418, at a suitable rate to maintain the desired high temperature and high level of radiation of the feedstock. Incidentally the tubes 418 interconnecting the upper chamber 414 and the lower chamber 416 may be made of mullite including the host/sensitizer materials mentioned in the

various examples given above. Similarly the manifolds 414 and 416 may be made of such materials. Alternatively the elements 414, 416, and 418, may be made of metal, such as stainless steel, to which suitable quantities of host/sensitizer materials have been added in order to give the desired intimate irradiation action with regard to the feed stock.
Instead of using a single reaction chamber as shown in FIG. 13, a heat and irradiation exchange unit could be employed with a multiple reaction chamber apparatus such as that shown in FIG. 9. When used with a multiple reaction chamber arrangement such as that shown in FIG. 9, of course the heat exchange elements must make sealing engagement with the walls of the individual reaction chambers which will be at different pressures during different portions of the individual staggered cycles in the different reaction chambers.

It may be noted that, in accordance with disclosures in my prior co-pending patent application cited above, and teachings found elsewhere in the present specification, the hydrogen and H.sub.2 O.sub.2 "tailings", obtained as a vacuum is being drawn on line 438, and such output hydrogen and/or hydrogen peroxide from line 434 as may be desired, may be applied through line 426 to the central burner 424. This may serve the purpose of supplying additional heat to the entire unit to permit more rapid flow of feed stock through lines 420 and 422 without loss of temperature in reaction chamber 402.

Energy Balance

In my prior co-pending patent application an "Energy Balance" section was included. In the present specification, a portion of the prior analysis will be set forth, and a more thorough energy analysis involving the new material in this application will be included.
In view of the fact that the apparatus of the present type and as disclosed in my prior application are exothermic on a net basis and also produces hydrogen or hydrogen peroxide which can be burned, there have been some suggestions that certain socalled Laws of Thermodynamics are being violated. This is of course not the case, as will be developed by the Energy Balance analysis set forth below.

From an overall standpoint, the present system may be viewed as providing an energy balance and not violating any "Laws of Thermodynamics" as a result of the low energy content gaseous products which are released in the course of the process. These low energy gaseous products may include HO and HO.sub.2, which are less wellknown gaseous products. When these gaseous products are released into the atmosphere, it is believed that they absorb high frequency radiations, and eventually change state to become hydrogen gas, oxygen gas, water vapor, atomic hydrogen and atomic oxygen. In one sense, therefore, the present system may be considered to utilize solar energy.

The stoichiometric reactions set forth below represent one of several modes of operation which may obtain in implementations of the present invention.

The foregoing equations may be analyzed from two different standpoints. Incidentally, it may be noted that the "2HO" designated (4) in the upper equation is actually evolved in the disproportionation phase. In addition, a portion of the hydrogen gas H.sub.2 from (6) in the upper equation is an input in the lower equation which combines with the disproportionated oxygen to form HO. Also, of course, the incident photons are applied in the atmosphere, and not in the apparatus per se. It should also be noted that the O.sub.2 input designated (2) is essentially

optional and may involve the venturi unit 212 ##STR1## or inlet 217, of FIG. 6, whereby additional O.sub.2 is supplied to generate H.sub.2 O.sub.2, as noted.
In the following analyses, the enthalpies and entropies of the starting reactants are subtracted from the enthalpies and entropies, respectively, associated with the products. The letters "in" have been.

In closing, reference is again made to my copending patent application Ser. No. 768,808, filed Feb. 15, 1977, in which more detail is presented relative to the temperatures, pressures, and other reactants which may be used. As noted in the prior specification, the temperature of operation should be above the dissociation temperature for oxygen for the reactant being employed at atmospheric pressure. Advantageous high speed results have been achieved with the reactant in the pyroplastic state of incipient fusion Concerning pressures, the pressure during dissociation should be at least as low as atmospheric pressure, and preferably a vacuum should be applied to reduce the pressure to a fraction of atmospheric. The vacuum may be applied to draw the tailings through the burner to extract additional heat from the tailings. During the hydrogen displacement portion of the cycle the pressure should be well above atmospheric to facilitate sequestering of the oxygen by the reactant. Successful results may be achieved with reactants such as MnO with gauge pressures of about 100 to 130 or 150 and up to 500 pounds per square inch. Even higher pressures may be employed. Concerning the active reactant, as mentioned in my prior copending specification, it preferably includes at least one metal having a plurality of valence states. It should also have an oxide which will, when subjected to water vapor at elevated temperature and/or pressure, and preferably both, combine with the oxygen and displace the hydrogen in gaseous form exothermically. The reactant also preferably has the property of disproportionation or dissociation to release the combined oxygen when the temperature is raised or preferably when the pressure is reduced, and when the evolved oxygen is separated from the reactant. Advantageously, the heat required in the disproportionation part of the cycle is significantly less than that generated in the exothermic portion of the cycle when the reactant combines with the oxygen in the steam and releases hydrogen, so the entire cycle is exothermic. Also, the reactant should be susceptible of remaining in the pyroplastic state of incipient fusion during the change in state from one oxidation level to another, and back again, under the described conditions.

Some of the metals and oxides thereof which fulfill the foregoing requirements include (1) antimony, (2) cesium, (3) barium, (4) iron, (5) manganese, (6) chromium, (7) iridium, (8) nickel, and (9) thallium. Other metals which have multiple valence states are known, but most of these have practical problems which preclude their use. Thus, for example, mercury has too low a melting point, and its oxides are unstable. In the case of other metals having multiple valence states, their oxides may be poisonous, they may be caustic or are not available in practical or commercially available quantities. Other metals having multiple valence states have oxides which will not readily disproportionate. Combinations of reactants satisfying the requirements indicated above may be employed in the form of alloys, eutetics, and with other materials to obtain desired temperature and mechanical properties.

FIGS. 14 and 15 are particularly useful in analyzing the apparatus of the present invention from a radiation standpoint. FIG. 14 shows spectral radiant emittance, or power in watts radiated at various wavelengths from a "black body" having a temperature of 1000.degree. Kelvin, while FIG. 15 is a similar plot showing photon emission, or the number of photons emitted at various wavelengths. The FIG. 14 plot drops off more rapidly than that of FIG. 15 because shorter wavelength photons are more energetic and have higher power. In accordance with known principles, the energy is directly proportional to the frequency and inversely proportional to the wavelength. It may also be noted that, in the plots of FIGS. 14 and 15 the visible range is from about 0.4 to 0.7 microns. Accordingly for the temperature of 1000.degree. Kelvin (about 727.degree. Centigrade and about 1341.degree. Fahrenheit), which is plotted in FIGS. 14 and 15, the radiation peaks in the spectrum at wavelengths somewhat longer and at frequencies slightly lower than the visible band. FIGS. 16, 17, and 18 show a system for applying radiant energy to a feedstock. In FIG. 17 the feedstock is applied to reaction chamber 302 by inlet tube 304 which is connected to manifold 306. Manifold 306 is supported by insulating ceramic material 308 which may either by in the form of a ring or a series of supporting blocks. The reaction chamber has an outer cylindrical stainless steel wall 310 secured to upper and lower stainless steel end plates 312 and 314. The chamber 302 is provided with a cylindrical ceramic liner 316 and upper and lower inner ceramic end plate 318 and 320. Suitable insulation 322 such as ceramic foam and an outer casing 324 are also provided. A series of coated wires 326 extend for most of the length of the chamber 302 between upper and lower electrically conducting support members 328 and 330. As shown in FIG. 16, the wires 326 are made up of an inner wire 332 of conducting or resistive material and an outer coating 334 of ceramic material of radiation emitting material of one or more of the types previously described.

The upper and lower wire supporting members 328 and 330 may be held apart by the elongated ceramic member, and the metal rod 338 which extends into the lower hollow end of ceramic member 336. The coated wires 326 are heated up by the application of electricity to power input conductors 340 and 342 to a temperature in the order of 1000.degree. Kelvin. This causes a certain amount of thermal expansion in the wires, and by using a suitable metal rod 338 which has a slightly higher coefficient of thermal expansion, the wires 326 may be maintained in operative positions relative to each other. In the case of a process involving steam as the feedstock and where it is desired to have hydrogen gas and H.sub.2 O.sub.2 as the output product, air may be supplied either through input tube or pipe 304 and/or through separate input 344 to the apertured ring shaped mainfold 346 which is held in position by supports 348. Output product is drawn off through pipe 350. In practice, and as indicated in the block diagram of FIG. 18, air may be supplied to the reaction chamber 302 either through input 304 along with the input feedstock such as steam, or through input 344 at the upper zone of the reaction chamber. When the air is supplied through input 344, toward the upper end of 302, it combines with the previously-formed hydrogen, resulting from dissociation of the water vapor, to form H.sub.2 O.sub.2. Other blocks shown in FIG. 18 include a source of electrical power 354, a supply of liquid water at 356, a steam formation unit 358, and a storage container 360 for fuel gas such as gaseous hydrogen H.sub.2 and hydrogen peroxide H.sub.2 O.sub.2. The supply line for water is indicated at 362, and that for air at line 364. As indicated by line 366, a portion of the fuel gas which is formed may be fed back to the steam formation unit 358 to increase the temperature of the water vapor being supplied to reaction chamber 302. After the unit is in operation for a short period of time, the steam is supplied to the reaction chamber 302 at a temperature well above the intended operating temperature of reaction chamber 302 so that little or no electricity need be supplied from the source 354. Thus, for example, with steam being supplied at between 1100.degree. and 1200.degree. Kelvin, the temperature of 1000.degree. Kelvin desired within the reaction chamber 302 may be sustained with the supply of very little or no electricity over line 368.

With reference to FIG. 20, the coated wires 326 are shown supported by a screen 370 which may be made of any suitable high temperature resistant conducting material. The wires 326 are woven in and out of the surface of the screen 370 to form the array as shown in FIG. 17. It may be noted that the frame or support members 328 and 330 of FIG. 17 are shown as being formed of two parts. These two parts are open frame members which clamp the screen 370 as shown in FIG. 20 and support it. If desired or if the conductivity of the particular coating employed in the system is relatively low, the coated wires 326 may be scraped bare and welded contacts made at points such as those indicated at 372 in FIG. 20 to make better conductive engagement with the screen 370 by which electricity is initially supplied to these wires. It is also noted that, instead of using the screen as shown in FIG. 20, the supporting structures 328 or 330 may be simple perforated plates with the coated wires 326 threaded through them. Now, considering one specific example, the wires 326 of FIG. 17 may be coated with the host and sensitizer materials set forth in examples Nos. 1 and 2 of the 15 examples set forth hereinabove in the present specification. More specifically, before going into the example in detail, it may be noted that various units are used in the present specification in reference to the wavelength of the radiations which are employed. For reference purposes and for ease in converting various units, it may be noted that the visible range extends from about 4000 Angstrom units to 7000 Angstrom units, with an Angstrom unit being equal to 10.sup. -8 centimeters. Expressed in microns this visible range corresponds to wavelengths from 0.4 to 0.7 microns, with a micron being equal to 10. sup. -4 centimeters. Similarly, when millimicrons are employed to measure wavelength, they correspond to 10.sup. -7 centimeters, and the visible spectrum range is from 400 to 700 millimicrons.

It may also be noted, in converting frequency to wavelength and vice versa that the frequency of light is equal to 3 times 10.sup.10 centimeters, and that the product of frequency and wavelength is equal to the velocity of light. Accordingly, using this simple expression that the product of the frequency times the wavelength is equal to the velocity of light, easy conversion may be made from frequency to wavelength, and vice versa. For convenience, reference is also made to Table I which indicates the location of the visible light band relative to the infrared and ultraviolet frequency bands, in addition to the remainder of the electromagnetic radiation spectrum.

With the foregoing background, reference is again made to examples Nos. 1 and 2 of the 15 numbered examples set forth earlier in the present specification. It may be noted that the emission, for Example No. 1 was approximately 0.69 microns corresponding to a frequency of approximately 4.34 times. 10.sup.14 cycles per second. This corresponds to a red color in the visible spectrum. Example No. 2 provides a yellow output light with a wavelength of approximately 0.59 microns corresponding to a frequency of approximately 5.08 times 10.sup.14 cycles per second. Incidentlly, another yellow line is produced by the materials of Example 12, with a wavelength of 0.61 micron, corresponding roughly to 4.91 times 10.sup.14 cycles per second.

Referring back to FIG. 17, one-half of the wires extending from support 328 to support 330 are coated with material providing red output radiation such as specified in Example No. 1 referred to above, and one-half of the wires are coated with material providing a yellow output radiation. These wires are threaded through the supports 328 and 330 so as to be interspersed with one another so that the yellow and red output radiation wires are not grouped together but are entirely interspersed with one another.

When feedstock is supplied to the reaction chamber 302, the radiation will be directed from the wires to the medium and the radiation of different frequencies will impinge upon the discontinuities provided by the feedstock vapors and will beat with one another and will be converted into sum and difference frequencies. More specifically, considering examples Nos. 1 and 2, the frequency for the red radiation of Example 1 was approximately 4.34 times 10.sup.14 cycles per second, and the frequency for Example No. 2 was approximately 5.084 times 10.sup.14 cycles per second. One frequency which will be formed as these radiations impinge on the feedstock will be the sum frequency equal to approximately 9.42 times 10.sup.14 cycles per second. This corresponds to a wavelength of about 0.32 microns, in the near ultraviolet frequency spectrum. Water vapor has a number of absorption peaks in the near ultraviolet frequency spectrum and these peaks are broadened by the elevated temperature present at 1000.degree. Kelvin at which the reaction chamber 302 is operated. Accordingly, in addition to the dissociation action produced by the direct radiation at the red and yellow frequency bands, the powerful ultraviolet radiations will have a strong dissociative effect on the water vapor being transmitted through the reaction chamber 302. Incidentally, the energetic nature of the radiations in the near ultraviolet may be noted from the far right-hand column in Table No. I in which the radiation in the near ultraviolet is shown to have an energy level in the order of double that in the red and yellow regions of the visible spectrum.

Attention is also directed to the plot of FIG. 21 showing the absorption characteristic for hydrogen peroxide H.sub.2 O.sub.2 which is being formed in the radiation chamber 302. More specifically, it may be seen that the absorption coefficient increases rapidly from the near ultraviolet range of 3000 Angstroms, or about 0.3 microns, to the far ultraviolet range toward the left of FIG. 21. Accordingly, with near ultraviolet radiation being employed in the chamber of FIG. 17 (reaction chamber 302) to dissociate water vapor, it may be noted that the desired product gas H.sub.2 O.sub.2 will be little affected and will be essentially transparent to this near utraviolet radiation and will thus remain in its H.sub.2 O.sub.2 chemical state, after it is formed, without adverse effect from the near ultraviolet radiation. FIG. 19 shows a alternative reaction chamber 376 which is divided into an upper section 378 and a lower section 380. Dividing these two sections of the chamber is a perforated ceramic plate 382. In addition, two different sets of coated wires 384 in the upper section and 386 in the lower section, are provided. These two sets of wires are electrically interconnected by the links 388 which extend through the ceramic plate 382 and join the lower support 390 for the upper set of wires 384 to the upper support 392 for the lower set of wires 386. Apart from being divided into two chambers with two sets of different coated wires in the upper and lower portions 378 and 380 of the reaction chamber 376, the chamber of FIG. 19 is generally similar in configuration to that of FIG. 17. With regard to the nature of the coating on the wires 384 and 386, the upper wires 384 are coated as described above in connection with FIG. 17 to produce ultraviolet radiation.

The lower set of wires 386, however, are coated to provide strong output radiation in the infrared radiation spectrum, as disclosed hereinabove in connection with examples A, B, and C. Accordingly, the arrangement of FIG. 19 is organized to provide powerful radiation in portion 380 which will impinge vigorously on the feedstock and provide an initial very substantial dissociative effect on the water vapor. Then, in the upper portion 378 of the reaction chamber the dissociation of the water vapor is continued, but at a frequency in the near ultraviolet range which is clearly at a frequency spectrum with respect to the hydrogen peroxide, H.sub.2 O.sub.2, product gas which will not adversely affect or dissociate it. The combined effect of the two stage radiation chamber with different radiation frequencies being employed in each of the two chambers, is such as to maximize the production of the desired output gas.

Of course, in connection with FIGs. 16 through 21, two specific examples of reaction chamber arrangements employing radiation to produce desired product gases have been set forth. It is to be understood that through the examination of the spectral absorption characteristics of the feedstocks and products, and by suitably providing radiation within the reaction chamber matched to the characteristics of the feedstock and the product, many other similar combinations may be developed by those skilled in the art. It is also particularly to be noted that through the use of coated wires, the amount of initial heat input required to raise the reaction chamber to operating temperature conditions, is greatly reduced.

For completeness, one set of dimensions for the wires 326, 384 and 386 will now be given. The overall diameter of the coated wires may be 0.00257 inch, and the diameter of the inner metal wire is 0.00157 inch with the coating being about 0.0005 inch thick, adding about one-thousandth of an inch to the diameter. The inner metal wires may, for example, be made of tungsten or other metal having a relatively high melting point and adequate strength at 1,000.degree. Kelvin.

FIGs. 22 and 23 show an alternative arrangement for applying high frequency radiation to feedstock supplied to a reaction chamber. In FIG. 22 the reaction chamber per se is made up of two hemispheres 402 and 404 which are secured together by bolts 406 which extend through the mating flanges 408 and 410 of the hemispheres 402 and 406. An outer sheet metal housing 412 is provided to enclose the unit and to support the various enclosed elements of the system. Thus, for example, the hemispheres 402 and 404 are supported from brackets 414 secured to the housing 412. Between the reaction chamber 402, 404 and the housing 412 is suitable insulation for 416 of the ceramic foam insulation type.

Feedstock is supplied to the reaction chamber 402, 404 through input pipe 418, and product gases are withdrawn from the reaction chamber through pipe 420. Input radiation is supplied to the reaction chamber 402, 404 through the window 422 which may, for example, be made of high temperature resistant quartz glass. FIG. 23 is taken along line 23-23 of FIG. 22. Shown to advantage in FIG. 23 are the two lasers 424 and 426 which direct coherent radiation of different colors through the window 422 into the reaction chamber 402, 404 which has a highly polished interior surface. One of the lasers 424, 426 is a ruby laser with output radiation in the red spectral region, while the other laser is an yttrium aluminum garnet, or Yag laser with output radiation in the green frequency band. These lasers are directed at an acute angle through the window 422 so that the radiation of the two lasers beat to produce a higher frequency in the ultraviolet spectrum, as discussed and developed hereinabove in connection with the radiation from the wires of FIGS. 17 and 19. Accordingly, the feedstock supplied to the reaction chamber through the pipe 418 will be irradiated not only with the red and green direct laser illumination, but also by the beat frequencies which arise when the red and green radiation impinge on the discontinuities provided by the feedstock materials supplied to the chamber. It may also be noted that in all of the embodiments decribed herein, where additional oxygen is supplied, and hydrogen peroxide, or H.sub.2 O.sub.2, is formed, this reaction is exothermic and supplies heat to the reaction chamber. This factor is useful in increasing the efficiency of the processes, and contributes to the self-sustaining nature of the processes, as discussed above. On a general basis, the processes described herein provide a mechanism for the transformation of low grade thermal radiation into specific coupled modes of intense monochromatic radiation providing new higher frequencies and shorter wavelengths with considerably increased power. The energy change is accomplished through the creation of controlled spatial harmonics beating together while passing through media discontinuities within a non-linear medium. The effect is much like a parametric amplifier which controls the disposition of the electromagnetic energy conveyed by the waves. On a comprehensive basis, the transformation of the broad black body radiation into specific monochromatic frequencies of high energy which are matched to the absorption bands of the feedstock and to the transmission bands of the product, make for process efficiencies which are extremely high. With regard to the operating temperatures and pressures for the apparatus of FIGS. 16 through 19, and that of FIGS. 22 and 23, the temperatures and pressures are less critical than for the embodiments disclosed earlier in the present case. In general, in order to provide radiation in the desired spectral range the apparatus of FIGS. 16 through 19 should be operated at a temperature in the order of 1000.degree. Kelvin; however, other temperatures may be employed which produce adequate radiation at the desired frequencies, and a departure of 100.degree. or 200.degree. above or below 1000.degree. K. would be operative, it is expected, with radiation drop off toward the lower end of this temperature range and possible materials failure problems toward the upper end of the range. Concerning the embodiment of FIGS. 22 and 23, a lower temperature such as 250.degree. F., above the boiling point for water at the pressure which is employed, would be adequate. Concerning pressures, somewhat lower pressures are adequate, as compared with the embodiments involving the use of metallic oxides, and no change in pressure is needed. For the embodiments of FIGS. 22 and 23, a gauge pressure of 3 or 4 pounds would be adequate, although higher pressures of up to several hundred pounds, for example, could be employed where higher fuel gas reservoir pressures are desired. Similar pressure considerations are applicable to the apparatus of FIGS. 16 through 20.

4.0.3.1. Blue Archie H. USP #: 4,124,463; November 7, 1978.

His relatively simple electrolyser

Mr. Blue was from Christchurch, New Zealand, he died about 1991 and in his lifetime he obtained a patent on that he claims will supply a sufficient amount of an oxygen/hydrogen/air mix to run an internal combustion engine.

A description of the invention of Blue as contained in a published article, and is given below:

Almost all drivers have made the experience that the motor runs better when it rains. This is also a reason why our parents sprayed coal with water to make it burn better. Therefor it is no wonder that for years some drivers have used a kind of water spray injector, which is very simple. It is a container of plastic or glass, which can be closed airtight. A thin pipe with an aquarium valve leads through the top cover down close to the bottom of the container. A second pipe enters only about 5 cm into the container from the top cover and is connected with the carburettor or the air filter. The container is filled with water to just below the level of the second pipe. The suction of the carburettor pulls air through the water in the container and so adds hydrogen and oxygen to the gas mixture, which results in a lowered consumption of gasoline.

This simple mechanism was improved by the New Zealand inventor Archie Blue with some additions so that the water vapour alone can run an internal combustion engine, without gasoline. It runs about 40 km with 1 litre of water.

His US is so simple that anyone with mechanical skills can produce it. On the non-metallic air pipe that enters the container, are mounted at equidistant intervals eight corrosion free round metallic plates, which have been perforated with numerous holes. They are electrified alternately with positive and negative DC voltage from the car battery (12 Volt, 2-3 Amp).

The resulting electrolysis separates the water into oxygen and hydrogen which attach to the metal plates in small bubbles. The air bubbles forced through the water by the suction of the carburettor take those small bubbles of hydrogen and oxygen with them to the top of the container. The energy thus obtained is three times that of gasoline per weight. No poisonous exhaust gases are produced because the end product of combustion is water vapour.
The air needs only 4 % of enrichment with these gases to burn hotter and faster than natural gas.

Warm water is easier to electrolyse and therefore a heating element is mounted in the bottom of the container.

In the electrolytic production of hydrogen and oxygen, air is pumped through the cell while the electrolysis is in progress so as to obtain a mixture of air with the electrolytically produced hydrogen and oxygen.

BACKGROUND AND BRIEF DESCRIPTION OF THE INVENTION

This invention relates to the production of gases which can be utilized primarily but not necessarily as a fuel.
To electrically decompose water it is necessary to pass direct current between a pair of electrodes which are immersed in a suitable electrolyte. It is normal in such electrolysis to place some form of gas barrier between the two electrodes in order to prevent the gases evolved during the electrolysis from forming an explosive mixture. However provided suitable precautions are taken it has been found that the gases can be allowed to mix and can be fed into a storage tank for subsequent use. Because the gases when mixed form an explosive mixture, it is possible for the mixture to be utilized for instance as a fuel for an internal combustion engine. In such circumstances it is desirable that the gases should also be mixed with a certain proportion of air in order to control the explosive force which results when the gases are ignited.

One of the difficulties encountered with electrolysis is that bubbles of gas are liable to remain on the electrodes during the electrolysis thus effectively limiting the area of electrode which is in contact with the electrolyte and preventing optimum current flow between the electrodes. Because in accordance with the present invention it is desirable that the gases evolved during the electrolysis be mixed with air, then it is possible for air to be passed through the cell while the electrolysis is in progress. The passage of air through the cell can be directed past the electrodes so as to entrain in the passage of air any bubbles of gas remaining on the electrodes.

Accordingly the invention comprises an electrolytic cell including a gas tight casing, a plurality of electrodes adapted to be supported on a central post within the cell in a spaced apart relationship and to be electrically insulated from each other, each alternative electrode being adapted to be connected to a positive direct current source or a negative direct current source respectively and wherein the central post is in the form of a tube, one end of which is extended out of the cell and is adapted to be connected to a source of air under pressure, with the other end of the central post terminating in an air outlet below the said electrodes, the said cell including a gas outlet to exhaust air forced into the cell through the central post and to exhaust the electrolytically produced gases mixed with the said air.

DETAILED DESCRIPTION OF THE INVENTION

Various forms of the invention will now be described with the aid of the accompanying drawings wherein:

FIG. 1 is a diagrammatic elevational view partly in section of one form of the invention,

FIG. 2 is a diagrammatic elevational view partly in section of a modified form of the invention,

FIG. 3 is a section along the line III--III of FIG. 2.

The cell as shown in FIG. 1 comprises a gas-tight casing 11 which is formed from a non-corrodible material such as a plastics material as is known in the art. A plurality of cathodes 11 and a plurality of anodes 12 are supported within the cell by means of an electrically insulating central post 13, with the cathodes and anodes being spaced apart by means of insulating spacers 14. The anodes 12 are all connected in parallel to a positive terminal post 15 while the cathodes are all connected in parallel to the negative terminal post 16, these connections being indicated in dotted lines in the drawings. The cathodes and the anodes are preferably in the form of disc like plates of a suitable metal which is consistent with the composition of the electrolyte utilized so as to ensure a satisfactory life to the cell. The plates may be shaped to conform with the shape of the walls of the cell which may be circular in cross section as indicated or any other desired shape.

The central post 13 is preferably in the form of a tube which extends out of the cell as at 13a. The lower end 18 of the tube is open so that air can be pumped into the cell through the central post 13 and enter the cell via the lower end 18 where it will pass up through the electrolyte. This will keep the electrolyte constantly in motion and thereby assist in the rapid removal from the electrodes of any gases that might be adhering thereto.

In the modification shown in FIG. 2 and 3, the electrodes are each provided with holes 17 and in such a case the central post 13 is preferably formed with at least one air hole 19 adjacent the lower end 18 thereof. A deflector plate 20 is also supported by the central post 13, this plate being dish shaped so as to deflect air issuing out of the air hole 19 up through the holes 17 in the electrodes. Such action further assists in dislodging any bubbles of gas clinging to the electrodes.

The cell also includes a gas outlet 21 so that the air which enters the cell together with the gases produced by the electrolysis can be exhausted out of the cell into a suitable storage tank (not shown in the drawings). If desired such storage tank can be arranged to accept the gases under pressure and for this purpose the air pumped into the cell will be pumped in under the required pressure. A gas drier (not shown in the drawings) can also be interposed between the gas outlet 21 and the storage tank.

Although the electrolysis will naturally produce considerable heat, nevertheless it can be found advantageous to install a heater in the cell, preferably in the bottom of the cell, to assist and facilitate the warming up of the electrolyte so that the cell reaches its most efficient operating conditions as quickly as possible.

Preferably also, current limiting means as is known in the art are employed so that the intensity of the electrolytic action can be controlled.

Means may also be provided for the automatic replenishment of water within the cell as the level of the electrolytic drops during use.

While it is recognized that the mixing of hydrogen and oxygen will create a dangerous explosive mixture, nevertheless by carrying out the invention as hereinbefore described the risk of explosion is minimized. The gases produced can be utilized for instance as a fuel to power an internal combustion engine and for this purpose it is desirable, as before mentioned, to mix with the gases evolved during the electrolysis a proportion of air so that when the mixture is ignited within the cylinder or cylinders of the engine, the explosive force so created can be of the desired amount.

While in the foregoing description reference is made to the utilization of the mixed gases as a fuel, it will of course be understood that the gases can be separated for individual use by techniques as known in the art.

FIG. 1

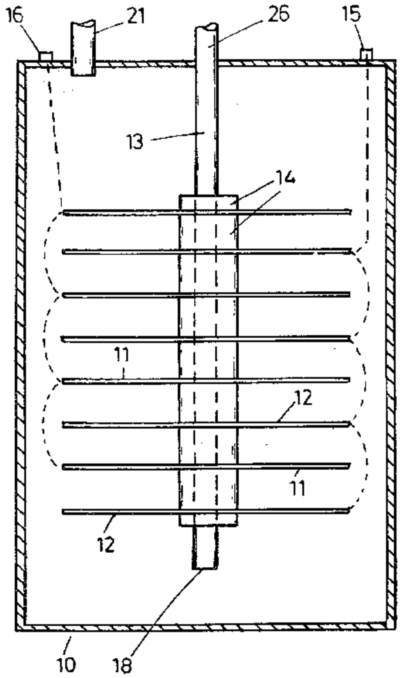

FIG 2

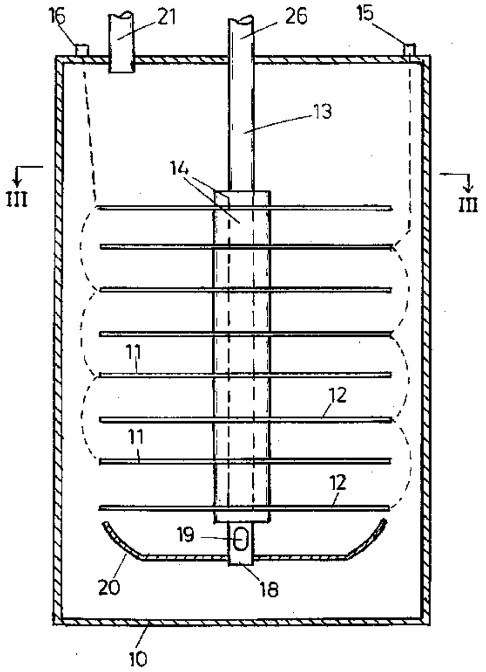

FIG. 3

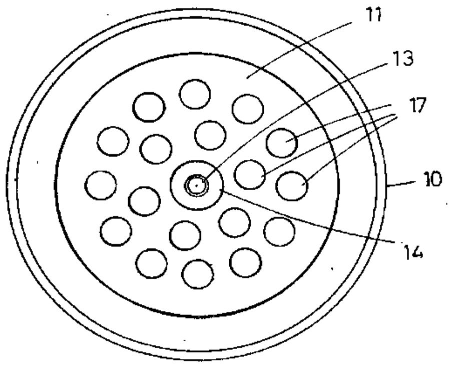

4.0.3.2. Brown Yull; US #: 4,014,777; March 29, 1977; US Cl. 204/228.5

Den von Yull Brown erfundenen Wassergas-Reaktor fürs Schweißen kann man kaufen. Siehe http://www.watertorch.com/ und mit diesem speziellen Browns Gas kann man auch unter anderem, so unglaublich es klingt, Stein mit Stein oder Stein und Eisen usw. verschweißen.
Für Otto Normalverbraucher hat dieses Gerät, zumindest aus meiner Sicht, abgesehen vom doch sehr happigen Preis, noch den Nachteil, daß elektrischer Strom zum Betrieb notwendig ist.

Dieser Nachteil könnte aber sehr schnell zum Vorteil werden, wenn die Angaben der Lieferfirma stimmen, denn das im Schweißgerät eingebaute Elektrolysegerät soll bis zu 9-mal mehr Energie erzeugen, wie zum Betrieb des Schweißgerätes allein benötigt wird. Falls dies stimmt, könnte man einen Teil des erzeugten Wasserstoffes durch eine Brennstoffzelle leiten und mit dieser Brennstoffzelle dann wieder Strom erzeugen und damit das Schweißgerät betreiben. Dann ist eine Unabhängigkeit vom Stromnetz gegeben und man könnte das Schweißgerät überall einsetzen.

Ich könnte mir z. B. unter anderen vorstellen, daß auch die Nahtstellen von Pipelines mit dieser Schweißart besser und sauberer ausfallen würden.

Mr. Brown produces his hydrogen-oxygen mixture by electrolytic dissociation of water by electrolytic dissociation of water under the action of DC electrical current.

Brown’s Gas cannot explode; indeed, it implodes upon ignition. One litre of water produces 1860 litres of gas. When this gas is ignited, the volume is reduced to the original one litre of water. This characteristic is very useful in the creation of near-perfect vacuums.

Brown’s Gas is produced from a very plentiful fuel, water, and is may times less expensive than conventional bottled gas.

We found, as we'd expect, oxygen gas being formed on the positive side of each plate and hydrogen gas being formed on the negative side of each plate but we also saw a third ASTONISHING thing.

We can see (and we see it every time) a THIRD gas being formed exactly in the middle BETWEEN the plates . . . in the fluid itself.

There is no connection between the bubbles coming off the plates and the line of bubbles coming out of the fluid; the fluid is clear. When very high amperage is used, the line of bubbles forms faster and at first assumes a bowed shape, before stabilizing as a straight line in the middle of each cell.

This is where we figure the actual Brown's Gas forms (water that has absorbed enough actual electrical energy to become a gas that is not steam).

I can see gas being formed exactly midway BETWEEN the plates in my transparent series-cell electrolyzers. It starts as a line of bubbles from the top to the bottom of the cell, so solid that it looks like another plate. This line of bubbles becomes visible in about three seconds from the time the electrolyzer is turned on. The line of bubbles then widens till it meets the bubbles being formed on the plates and the cell is full of bubbles (this takes about eleven seconds). I think the gas formed in the fluid is the Brown's Gas.

My new theory of Brown's gas is 'electrically expanded water.'

I now think any gas formed ON the plates is normal diatomic oxygen and hydrogen. It stands to reason that gas formed on the plates would be mon-atomic, immediately change to di-atomic (because of brownian movement and association) and would stay di-atomic. I can say for sure that no one knows exactly what's happening, except the results are getting more interesting.

Thus, when the electricity (in the Brown's Gas) is released by the 'flame,' it comes out as electricity and the water 'implodes' to it's original liquid form, with no heat and no expansion first. That's also why the flame is 'cool' yet has high energy effects.

Working with scientists and experimenters around the world, we have discovered new several new things about Brown's Gas. One of which I will detail here.

It now seems that Brown's Gas may NOT mon-atomic hydrogen and oxygen (which will make the nay-sayers happy) but is instead a special form of WATER; actual water which has had enough electrical energy added to it to form a gas that is NOT steam (this will make the nay-sayers unhappy again).

Steam is water that has heat energy added to it, (becoming a gaseous form of water) and loses it's volume (returning to liquid form) if cooled.

I think Brown's Gas is water that has had electrical energy added to it in a very unique way. Brown's Gas is stable in storage, is implosive, has a 'cool' flame and seems to put pure electrical energy directly into whatever material its applied to. Brown's Gas seems to be an 'electrical' flame, not a 'heat' flame.

BROWN'S GAS = EXPANDED WATER?

A long time researcher of Brown's Gas (Todd Knudtson) once described the Brown's Gas (to me) as a 'fluid crystal' which I had to accept at the time because I could see no other explanation that covered my experience/intuition about the gas. Somehow the mon-atomic hydrogen and oxygen were not finding each other and recombining into di-atomic molecules. It is easy to measure that the Brown's Gas has mon-atomic volumes produced when compared to the Faraday Laws.

Since then I (working with others who wish to remain anonymous) have reconfirmed the math of the 'weighing' data of William Rhodes. This is a simple, easily duplicated experiment and is very conclusive. Simply weigh the gas. It is important to note that the gas being weighed must come from an electrolyze.
It now seems more clear; Brown's Gas is just 'expanded water molecules'. Brown's Gas is too heavy to be mon-atomic, it is even too heavy to be di-atomic; but it is exactly the right weight to be water-gas (di-hydrogen oxide in gaseous form).

I currently think that Brown's Gas is water and that it is water that has absorbed electricity like a sponge absorbs water. I think that the atomic bonds are NOT broken, so Brown's Gas is STILL WATER; just in a high energy gaseous form that is NOT steam.

Brown's Gas exhibits mon-atomic volumes and energy levels and is able to maintain this situation because the hydrogen is still associated with their respective oxygen, just in a higher 'spin-state'. I have some additional evidence on this from Dr. Clark in California, who developed the math for Dr. Randall Mills hydrogen research.

Now for those that want to see the math, here is the experiment described by William Rhodes himself.

LIFTING POWER OF ELECTROLYZED MIXED GASES
First, be aware we are dealing with common-ducted gases, data being absent from NIST and the literature. There is also theory vs experimental evidence to contend with. From the CRC handbook: "Lifting power of 1 cu/ft hydrogen is about 0.075 lb. at 760 mm pressure."

SETUP: Our test volume chosen was 1 liter single duct electro- lyzed gases. An igloo from a plastic pop bottle was cut to provide exactly 1000 ml volume between the flat igloo door top, and the upper dome. (1000 ml was from a standard 1000 ml flask, transferred to the pop bottle, marking the door top, and extend- ing the igloo another 2", where it was lathe cut and the doorway snipped out. It was located inverted on the pan of our Mettler milligram balance. An L shaped tube on lab stand extended through the doorway and bent upward ending near the dome top, leaving the balance completely free of interference.

The gas generator was purged of air 15 minutes. The balance was tare arbitrarily adjusted for 30 grams +- 1 mg. The igloo was filled with pipe smoke; -6 mg deflecion noted due to warmer air.

The gas tube was attached and maximum weight reduction of 0.510 grams was attained, rounded off to the nearest mg. Gas input was allowed to flow for 30 minutes for accuracy. 5 minutes after gas cutoff, the balance returned to the pre-gas reading caused by rapid diffusion of electrolyzed gases into atmosphere.

Comparing H2 lifting power, 1 liter mixed gases multiplied to 1 cu/ft provided lifting power of 0.0311 lb. Or 41% that of H2."

Recalculation LIFTING POWER OF BROWN'S GAS

Now I will summarize the facts that others and I discovered upon analyzing the above experiment. The conclusion is interesting.

From the CRC handbook:

"Lifting power of 1 cu/ft hydrogen is about 0.075 lb. at 760 mm pressure."

We calculate molecular hydrogen under the bell to weigh about 0.089 gm >per L giving that "lifting power" of .075 lb. per cubic ft (1.2 gm per liter). >Let`s say that air as an "ideal gas" weighs about 1.29 gm per L. (29 gm in >22.4 L at STP). Testing with molecular hydrogen should give 1.29-.09 >=1.2 gm/L of "lifting power" which computes with the CRC reference.

0.5 gm per liter is equivalent to .0311 lb. per cubic foot? I calculate it to be .0312136 which is pretty close.

NOTE: A standard volume (22.4L) contains the molecular mass in grams at STP.

In pure Brown's Gas, the atomic weight would be 18, if we assume a gaseous form of water. Two atoms of hydrogen and one of oxygen forming one molecule.

2 moles of H2 (a total molecular mass of 4 gm) + 1 mole 02 (a di-atomic molecular mass of 32 gm) ie:
3 mole of gaseous mix weighs 36 gm and occupies (22.4x3) L = 67.2L or 36/67.2 gm per L or 0.53 gram per liter.

2 moles of H = 2 grams in 44.8 liters. 1 mole of O = 16 in 22.4 liters. 18/67.2 = 0.2678 gram per liter; (half that of di-atomic).

If Brown's Gas were to be a newly discovered "ideal gas" (gaseous water) of H20, one mole would weigh 18 grams in 22.4L or 0.8 gram per liter.

So Brown's Gas would be heavier than the molecular 2:1 mix (both measured at STP).

Assuming that the test gas is mon-atomic it should weigh 0.2678 gm per L. 1.29-0.2678 = 1.0222 gm/L lifting power.

Assuming that the test gas is di-atomic it should weigh 0.53 gm per L. 1.29-0.53 = 0.76 gm/L lifting power.

Assuming that the test gas is molecular 'water-gas' it should weigh 0.8 gm per L. 1.29-0.8 = 0.49 gm/L lifting power.

So we can say that the test gas weighs (1.29-0.51) = 0.78 gm/L. And we are left with the conclusion that Brown's Gas is neither mon-atomic or di-atomic gas, but simply expanded water. Water in a gaseous form that is NOT steam.

I currently think that Brown's Gas is electrically expanded water that forms right out of the fluid itself. A high-energy form of water that carries it's energy as a form of electricity. Several experiments have measured an electrical pulse as the gas is exploded. Some of the effects of the gas are very hard to explain if electricity is not assumed.
Obviously more testing needs done by organizations that have proper equipment. Let me know if anyone is interested in independently verifying tests like this.

Note: Brown's Gas as produced by most electrolyzers (even a uper-efficient designs) has enough di-atomic hydrogen and oxygen in it to be explosive. Though the explosion is not as violent as a pure 'diatomic' 2H2:O2 explosion.

Note: Previous 'mon-atomic' theory mathematics are still valid as per energy potential per volume of gas electrolyzed.

I am now rating the gas as 'proof' instead of 'percent'. In my previous literature I rated the quality of gas that comes off the cells by the electrical input to volume ratio. For a given amount of electricity you would get about 930 liters of 2H2:O2 per liter of water. If the gas was pure mon-atomic (4H:2O), you would get about 1860 Liters of gas per liter of water. So I called 930 Liters 100% and 1860 Liters 200%.

When I rate my ER1150 Water Torch as 130%, some people thought that meant I was doing 'over-unity' gas production. I see no 'over-unity' in Brown's Gas, I am just trying to use a method to indicate gas quality so that people can know the quality of gas coming from various Brown's Gas machines. So now I rate gas quality as 'proof.' My ER1150 Water Torch puts out 130 proof Brown's Gas, which is the highest quality of Brown's Gas available in a commercial Brown's Gas machine.

Brown’ Gas

This invention relates to welding, brazing or the like utilizing a mixture of hydrogen and oxygen generated in substantially stoichiometric proportions in an electrolytic cell by electrolytic dissociation of water, the mixture so generated being passed from the generator through a flashback arrestor and thence to a burner where the gases are ignited. The invention also relates to atomic welding in which the above mentioned mixture is passed through an arc causing dissociation of both the hydrogen and oxygen into atomic hydrogen and oxygen which on recombination generate an intensely hot flame.

This invention relates to welding, brazing and the like, utilizing hydrogen and oxygen, and extends to such applications as oxy-welding, oxy-cutting, atomic welding, and welding or cutting in combination with electric arc techniques. The invention also provides for the generation of hydrogen and oxygen for the abovementioned applications in combination therewith or separately.

A most important application of the invention is atomic welding utilizing the properties of atomic oxygen in combination with atomic hydrogen (for welding) or atomic oxygen separately (for cutting). This particular application of the invention is based, among other things, on the appreciation that considerable energy is associated with the dissociation of molecular oxygen into atomic oxygen by passing this gas through an arc, and that this property can be usefully employed to generate temperatures even higher than those previously attainable with, for example, an atomic hydrogen flame. The significance of the energy which can be obtained in this way can be appreciated from the following reactions that take place, and the heat energies associated therewith, when hydrogen and oxygen are both passed through an electric arc. Thus:

H.sub.2 H + H absorbing 101,000 cal. per gram mole O.sub.2 O + O absorbing 117,000 cal. per gram mole total218,000 cal. per gram mole.

On recombination of these atoms this energy is released as heat through a number of complex chemical reactions and results in an extremely high flame temperature. Previously it would not have been considered possible to practically pass oxygen or a mixture of oxygen and hydrogen together through an arc due to the highly explosive or inflammable nature of such gases. However in accordance with the concepts of the present invention this is indeed both possible and practical and, as mentioned above, enables the realization of much higher welding or cutting temperatures than hitherto obtainable by known practical means.

One of the objects of the present invention is to provide a method and apparatus whereby hydrogen and oxygen can be generated quickly and conveniently for immediate use for welding, etc., without many of the disadvantages associated with conventional gas welding practice. For example, the practice of employing cylinders (or "bottles") of gas, usually oxygen and acetylene can have significant disadvantages, particularly for users working remote from a supply depot and for whom there might be an appreciable delay between the placing of an order for a delivery of gas the actual delivery. For such users, in order to ensure an adequate supply of gas when a particular job demands it, it is often necessary to order fresh supplies in advance, even before the supply on hand is fully used, or else risk running out of gas before a job is completed. Since bottles of gas are generally delivered on a strictly exchange basis -- in that a used bottle must be returned in exchange for a refilled bottle -- the practice can mean a significant waste, as far as the user is concerned, if bottles containing useful amounts of unused gas have to be returned to the supplier.

The practice of using bottled gas also has associated with it a large number of other problems such as the possibility of gas leaking from bottles, possibility of industrial disputes which can result in severe delays in delivery and in supply shortages, liabilities, high purchase and storage costs, freight charges, and so on.

To illustrate some of the conditions which the consumer of bottled gas must put up with, listed below is a summary of the "conditions of sale" which apply to the sale and distribution of bottled gas.

The cylinder remains the sole property of the supplier, which retains the right to exercise at any time its proprietary powers in its discretion.

All cylinders and contents are forwarded at the expense and risk of the customers.

It is the responsibility of the customers to provide adequate labour for the loading and unloading of all cylinders at the premises.
Cylinders are to be returned to the supplier as soon as empty, carriage and freight charges paid.

A cylinder is not `returned` until received by the supplier at its works or warehouse or by its truck and a receipt on the suppliers form given for the same. No document purporting to be a receipt for any such cylinder shall be valid unless it is the suppliers printed form of receipt.

Cylinders are not transferable and must not be used for any purpose other than as containers for the gas sold by the supplier and must not be delivered or sent for recharging to any place other than the suppliers gas station.

The customer agrees not to resell to any person or Corporation, the gas contents of the cylinders of any part thereof.

Customers are held responsible for all loss or damage to cylinders from whatever cause arising from the time of delivery until returned to the suppliers. (Customers are advised to cover the cylinders by insurance).

Where a customer has not returned a cylinder in good order and condition within six months from the date of delivery, the supplier may, at its option, charge the customer with an amount not exceeding the agreed value of the cylinder and the demurrage due in respect thereof, and such amount is payable by the customer as liquidated damages for the detention of the cylinder. Notwithstanding the payment of such amount in respect of any cylinder, it remains the property of the suppliers and the right of the suppliers to recover possession thereof is not affected in any way.

No allowance is made on any residual gas returned in the cylinders.

And many other conditions varying in the different countries in the world. Another disadvantage, which is associated with oxy-hydrogen welding arises due to the marked ability of hydrogen to be absorbed by most metals. Thus when welding steel, for example, great care must be taken to ensure that excess hydrogen is not present otherwise it will be absorbed in the metal to cause loss of strength and brittleness. On the other hand, an excess of oxygen would cause burning of the metal and should thus equally be avoided. It is most important therefore that with oxy-hydrogen welding the mixture at the burner be adjusted to produce a neutral flame, that is, one in which there is neither excess hydrogen nor excess oxygen. In practice it is most difficult to maintain (and virtually impossible to judge by flame colour) a neutral flame, and for that reason oxy-hydrogen welding is not widely used despite the inherent advantages of low cost and high heat value offered by hydrogen as a fuel.

These and other disadvantages can be overcome to a significant extent by the present invention whereby hydrogen and oxygen fuel are generated simultaneously by electrolysis in an electrolytic cell and allowed to freely mix therein to form a stoichiometric mixture that will burn with a neutral flame. The fuel gas can be generated where and whenever required thereby eliminating the need for storage of bottles of gas and reliance on regular deliveries of gas which often cannot be guaranteed.

The method of the present invention requires no diaphragms or the like to separate the hydrogen and oxygen liberated by the electrolysis process and thereby enables considerable advantages to be realized over conventional electrolytic production of these gases. Such diaphragms have normally been regarded as essential for conventional electrolytic generators in order to separate the two gases that would otherwise form a highly explosive mixture; however, it has been found, in accordance with the present invention, that the two gases can be safely, and usefully, produced and utilized as a mixture for fuel purposes provided that suitable safety precautions, such as the employment of a flash-back arrestor, are taken. Such safety precautions may include, for example, the employment of a device which removes electrolyte vapour from the gas and at the same time acts as a flash-back arrestor. In obviating the need for diaphragms or the like the present invention enables the electrodes to be placed much closer together and avoids the high resistance associated with diaphragms, which in turn enables a significant increase in the rate of gas production for a given size of apparatus. In short the present invention enables the manufacture of small size equipment that is useful for a large variety of welding and similar work and that is not prohibitively bulky for the average situation: something which is impossible with conventional hydrogen-oxygen generating equipment.

In the development of apparatus from the basic concept of generation of hydrogen and oxygen electrolytically in a practical manner suitable for large industrial applications on the one hand, and small domestic applications on the other hand, a number of factors had to be considered, analysed and weighed one against the other. The following is a list of some of these factors to illustrate what has been involved.

Endosmotic pressure to be balanced against the hydrostatic pressure of the fluid.

Rate of flow of electric current in relation to the area of the electrodes.

The prior art problem of removing the gases from anolyte and catholyte, before diffusion and before the electrolytes are intermixed.

Effects of rapid changes in the rate of flow of electricity through the cell.

Effects of auxiliary decomposition within the anode and cathode sides of the cell.

The choice of the most readily ionized electrolyte of a maximum conductivity.

The least possible spacing between anode and cathode that can be employed.

A design of cell in which previously it was regarded impossible for the H.sub.2 and O.sub.2 given to become mixed with safety, which does away with diaphragms or the like which would increase the internal resistance, in which both hydrogen and oxygen can be mixed within the cell, and in which cells can be connected in series, parallel, or parallel and series to suit requirements.

The choice of materials for the electrodes.

The quantity of acids or alkali to be used.

The shapes of cells according to purpose of the cells, and the application for which they are designed.

The possibility of improvement with permanent or electro-magnetically induced fields applied to the electrolytic cells, to cause controlled separation of a quantity of the gases generated in the cells.

Ensuring effective circulation of electrolyte between the electrodes, with as little electrical resistance as possible.

The possibility of using sodium hydroxide or potassium hydroxide which, in concentrations from 10% up to 30%, which has negligible corrosion action on iron or nickel electrodes, apart from producing a solution of good conductivity.

The use of the cooling effect by passing of hydrogen and oxygen gases, for cooling electrolyte in the cell, for controlling the cell temperature, preferably between 40.degree. C to 60.degree. C, at which temperature the bonds between hydrogen and oxygen need a minimum of electrical energy to break.
The separation of hydrogen and oxygen from a mixture, using, possibly, a permanent magnetic field, or an electro-magnetic field which can be controlled to obtain a desired separation between the hydrogen and oxygen. Based on this principle, the oxygen could be substantially separated from the mixture and the hydrogen could be absorbed by, for example, selected metals, which have high absorption affinity for hydrogen (for example, palladium which absorbs 900 times more hydrogen from its volume). Also, using the principle of the invention, hydrogen and oxygen can be generated in large quantities with small units and the oxygen could, for example, be separated and used to supply hospitals, baby rooms, air conditioning systems, or for any other application, when oxygen is required. Oxygen can, in this way, be generated much faster and more conveniently than with conventional electrolytic generating equipment.

The possibility of absorbing the hydrogen or oxygen by specially selected materials in small containers and where the absorbed gas can be extracted when desired for welding or brazing where it would be inconvenient or impossible to do so with conventional equipment.
Making the welding operator entirely independent of any gas suppliers.

The generation of cheap gas, up to 6 to 7 times cheaper than normal gas supplies.

The design of equipment which gives not only professional welders, but handymen, or people who would like to do welding at home with oxy-welding apparatus, but would do it only occasionally and could not justify the expense associated with conventional gas supplies. Such people cannot justify paying for bottles of gas for a single welding only (having to keep the bottles, paying rent for them to keep them up to two years, to perform the next welding). For this reason, the welding apparatus made possible by the present invention is ideal because it produces gases for welding at the time and in the quantity that is needed.

Hydrogen-oxygen welding has the advantage that it does not pollute the atmosphere as does oxy-acetylene welding.

The design of electrolytic cells which are safe to use as well as convenient, which cells may incorporate their own flash-back arrestors as a safety precaution or an equivalent means, to prevent the hazards of explosion or fire.

The control of the current which passes through the cells, the temperature of the cell, which is a function of current, the control of the separation of the gases, and the removal from the gases of electrolyte vapours. In this regard there has been designed a special unit with preferably conical electrodes, and a flash-back arrestor. The flash arrestor may be constituted by a pellet of porous material, or a long capillary pipe located between the gas generator and a burner head. The fire hazards associated with a mixture of hydrogen and oxygen cannot be overemphasized and indeed it is probably mainly because of the recognized dangers associated therewith that extreme lengths have been taken to separate the two gases completely until they reach the burner. In accordance with the present invention it has been realized that, contrary to long standing opinions, the gases can be safely mixed together even when being produced and as a result many desirable advantages can be realized.

The provision of one or more safety valves adjusted to convenient pressure for releasing excessive pressures in the cell (for example, greater than 30 p.s.i.) which may result, for example, if a current control mechanism fails. The safety valves could be attached to an alarm, for example, to indicate a failure in the current control mechanism or the cut-off switches, etc.

Porous material may conveniently be placed in the burner head, so that backfire through the burner into the cell cannot occur.

In summary, the present invention contemplates, as an important feature thereof, a universal welding apparatus capable of being used to perform different types of welding operations based on the utilization of hydrogen and oxygen, making full use of the advantages which can thereby be realized, and equipment which can be made small and portable compared with existing apparatus such as that presently used for gas welding using bulky bottled hydrogen. To generate the fuel, in accordance with the invention a small compact electrolytic cell is made possible in which the only raw material which has to be replenished from time to time is water and which can be used whenever a source of electrical energy is available to supply the necessary amount of hydrogen or hydrogen and oxygen mixture for performing atomic welding or hydrogen-oxygen flame welding. In its simplest form, the gas generating apparatus of the present invention comprises an electrolytic cell adapted to be connected to an energy source, optionally through a step down transformer and rectifier, and having means for connection to a burner, preferably through a flash-back arrestor as a safety precaution.

The apparatus may be combined with a transformer as a single compact unit and for convenience the transformer may be provided with several windings to enable it to be used for auxiliary purposes such as battery charging, electroplating, arc welding or to provide an arc for atomic welding.

It has been found that a single electrolytic cell operating without diaphragms at several hundred amps will generate hydrogen and oxygen at a reasonable rate for small welding and brazing work but for larger work (for example, the welding of 10 mm steel plate) the required amperage becomes excessive (typically of the order of 900A or more) when considering the size of conductors and transformer and the problem of heat generation. Accordingly, in one aspect of the invention these problems can be significantly reduced by arranging a plurality of cells in series and using a much smaller current to obtain the same effective gas output. In effect the capacity of a series of cells for a given current input is that of a single cell multiplied by the number of cells. Alternatively the current requirement is reduced by a factor equal to the number of cells -- for a given rate of gas production.

Even so a large number of separate cells can be excessively bulky for portable applications and in a further aspect of the invention, therefore, the bulk can be greatly reduced by arranging the cells as a single unit in which a number of electrodes, effectively in series, are arranged adjacent each other in a common electrolytic chamber, the chamber being provided with a gas collection space and an outlet for connection to, for example, gas burner means. Furthermore, only the end electrodes need be connected to an external source of electrical energy and the arrangement as a whole can be made extremely efficient and compact. Additionally the need for a transformer for most applications can be eliminated by such an arrangement so that the apparatus can be designed to be electrically connected directly to a main electrical supply, through a bridge rectifier if desired. By eliminating the need for a transformer, the gas generating equipment as a whole can be made surprisingly compact, to be well suited for small domestic requirements as well as heavy industrial requirements.

In another important aspect of the invention, there is provided a safety device which monitors the pressure of hydrogen and oxygen being generated and regulates the current flowing through the cell(s) to increase or decrease the rate of gas production depending on the pressure. In one form the device comprises a chamber containing two electrodes, at least one of which is conical, arranged in the chamber (which normally contains a conductive liquid) and the electrodes being connectable in series with one or more electrolytic cells used for oxygen-hydrogen production.

The pressure responsive, current regulating device can be designed as an integral part of the electrolytic cell(s) or can be used as an attachment connectable externally and in series with the gas generating cell(s). The device can also be designed to combine the functions of a current regulating device and a flash-back arrestor, the latter function ensuring that a flame at the burner does not accidentally pass back through the hose lines to the highly explosive mixture in the gas generating cell(s). The device may incorporate a total current cut-out feature or may be used in combination with a cut-out device which fully interrupts the supply of electrical power should the pressure in the cell(s) accidentally exceed a maximum safe value. The current regulating device may also operate to regulate the current passing through the cells in accordance with the temperature to maintain the temperature within a desired range

FIG.1.

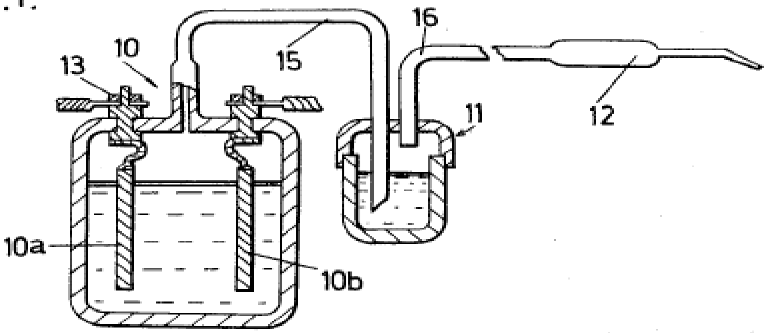

Referring to the drawings, FIG. 1 shows schematically a single electrolytic cell 10 operating to produce a mixture of hydrogen and oxygen, which mixture is passed through a flash-back arrestor 11 to a burner 12. The cell 10 contains two plate electrodes 10a and 10b immersed in an electrolyte consisting of a solution of KOH in water and connectable through terminals 13 and 14 respectively to a source of a.c. or DC electricity. Preferably, DC is used as the electrical impedance of the cell, is much lower for DC than for a.c. The source of electricity may be a transformer, typically of 300 Amps output rating, connected to the cell through a bridge rectifier. The flash-back arrestor 11 is constituted by a water bath in which gas liberated in the cell 10 passes through a tube 15 into the water bath 11 and thence through a tube 16 to the burner 12. The arrangement is suitable for small welding and brazing work but becomes too bulky for very large work.

FIG. 2.

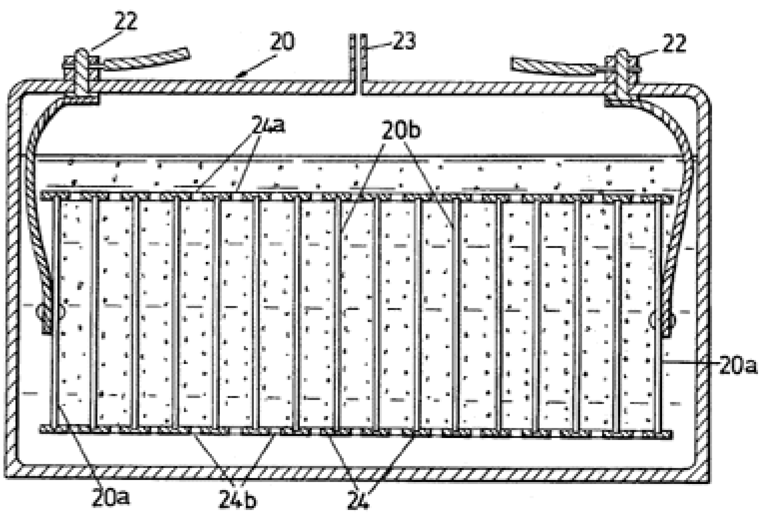

FIG. 2 illustrates in vertical cross-section an electrolytic cell 20 which requires a much lower current than the cell illustrated in FIG. 1 for a given current input. The cell 20 comprises what is in effect a series of cells constituted by a plurality of plate electrodes immersed in a solution of KOH in water. For convenience the electrodes are designated as 20a for the two electrodes at the ends and 20b for the intermediate electrodes. The electrodes 20a are connected, via conductors 21 to terminals 22 for connection to an external supply of electricity. The mixture of hydrogen and oxygen which is evolved at the electrodes when an electric current is applied, passes through an outlet opening 23 to a flash-back arrestor and thence to a burner (not shown in FIG. 2). The series of electrodes 20a and 20b are sealingly mounted in a tube 24 of insulating material which is provided with restricted apertures 24a at the top and 24b at the bottom, between each pair of electrodes. The apertures 24a permit gas to escape into the space 25 above the surface of the electrolyte and the apertures 24b permit electrolyte to enter freely into the spaces between each pair of electrodes. By virtue of this arrangement the electrical resistance between any two adjacent electrodes is far less than that between non-adjacent electrodes so that the arrangement is effectively one of a large number of individual cells connected in series. A very compact arrangement is therefore obtained but one which permits a relatively high gas production rate for a reasonably low current input. For example, a structure like that shown, consisting of the equivalent of, for example, 120 cells can generate gas at a current input of 15A (at, for example, 240V) equal to that of a single cell requiring a current input of approximately 1800A. This means in practice that a relatively portable apparatus can be produced which can be connected directly, without a transformer, to most domestic electrical supplies and which can maintain a sufficient rate of gas production for most types of welding work. An advantage which particularly distinguishes the arrangements disclosed from conventional gas welding apparatus is that the hydrogen and oxygen are automatically produced in substantially the correct proportions to give a neutral flame. No mixing valves are required and even unskilled personnel can produce satisfactory welds without difficulty. In fact indications are that many welds can be produced better than by any other welding process.

FIG.3.

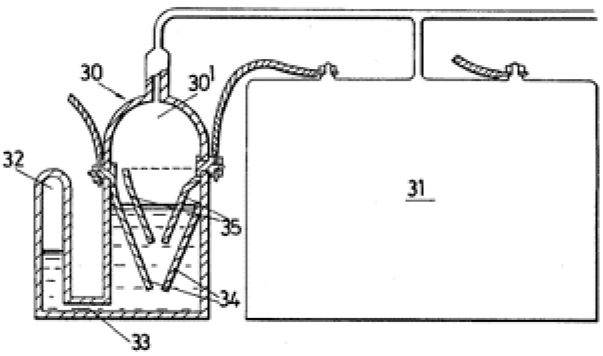

FIG. 3 illustrates a pressure responsive safety device 30 operable connected in series (electrically) with an electrolytic hydrogen-oxygen cell 31 for regulating the current passing there through in accordance with the gas pressure being generated. The device, or cell 30 comprises a chamber 30' in communication with a reservoir 32 via a passage 33. Two conical electrodes 34 and 35 are mounted in spaced relation within the chamber and connected in series between a DC source (not shown) and the electrolytic cell 31. An electrolytic solution of KOH and water is provided within the chamber, portion of which enters the reservoir 32. When the cell 31 is operating to produce hydrogen and oxygen the pressure of the gas being produced acts on the surface of the electrolyte in the chamber 30' to displace an amount of the electrolyte into the reservoir 32 against back pressure exerted by air trapped in the reservoir, the amount of electrolyte displaced depending on the pressure of the gas in the chamber 30'. At the same time the area of contact between the electrodes and the electrolyte in the cell 30 reduces in proportion to the drop in electrolyte level, causing the electrical resistance of the cell 30 to rise and the current passing there through to fall. Should the gas pressure drop the electrolyte level in the cell 30 will rise and the current passing into the cell 31 will also rise. Thus the cell 30 operates to regulate the rate of gas production in accordance with the pressure produced and prevents excess gas pressure to build up in the cell 31.

FIG. 4.

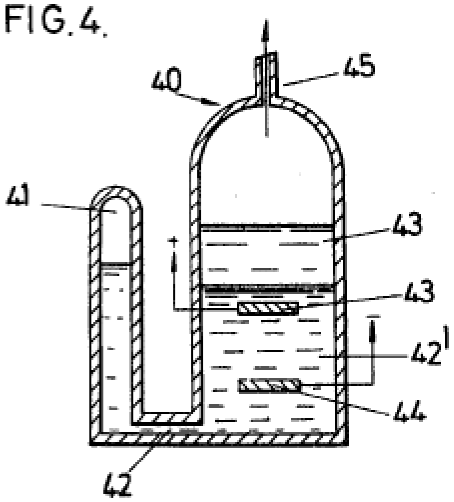

FIG. 4 illustrates an alternative form of safety device which is operable to make or break the connection between an electrolytic hydrogen-oxygen cell (not shown in FIG. 4) and an electric current source. The device comprises a cylindrical container 40 in fluid communication with a liquid reservoir 41 via a passageway 42, and a quantity of mercury 42' contained in the container and reservoir. Two electrodes 43 and 44 are disposed one above the other in the container 40 and are normally immersed in the mercury with a conductive path thereby formed between them. The container is connected electrically in series with an electrolytic cell (or cells) and in gaseous communication therewith through a hose 45. An increase in gas pressure resulting from generation of gases by the electrolytic cell(s) causes the mercury to be displaced towards the reservoir and the mercury level in the container 40 to fall. When the pressure exceeds a predetermined level the mercury level falls below that of the electrode 43 and electrical connection between the two electrodes is broken. The electrical connection is again restored when the gas pressure falls. A non-inflammable liquid, such as silicone oil or Freon is provided on top of the mercury to ensure that any arc which may be generated between the electrode 43 and the mercury is totally isolated from the gases above the liquids.

FIG. 5.

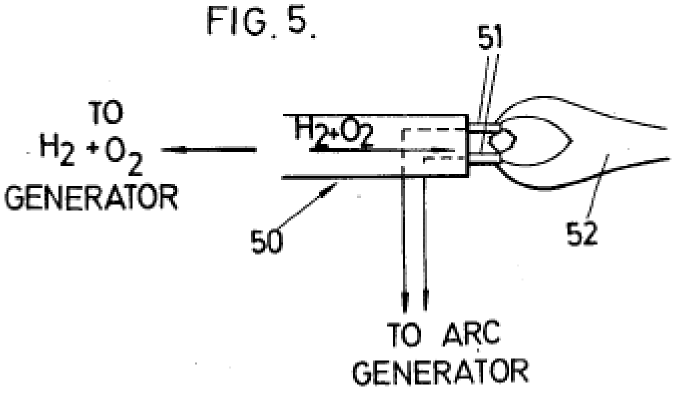

FIG. 5 shows schematically an arrangement whereby an exceedingly hot flame can be produced using the gaseous mixture generated electrolytically by the apparatus previously described. In this arrangement a mixture of hydrogen and oxygen, preferably in stoichiometrical proportion, is passed via a line 50 between a pair of tungsten electrodes 51 to produce molecular dissociation of the hydrogen and the oxygen and a very hot flame 52. It can be appreciated that whereas in an atomic hydrogen flame a significant temperature rise is obtained by striking an arc in the hydrogen, an even greater temperature rise can be realized by striking the arc between the oxygen as well since the dissociation energy of molecular oxygen is of the same order of magnitude as that of molecular hydrogen.

FIG. 6.

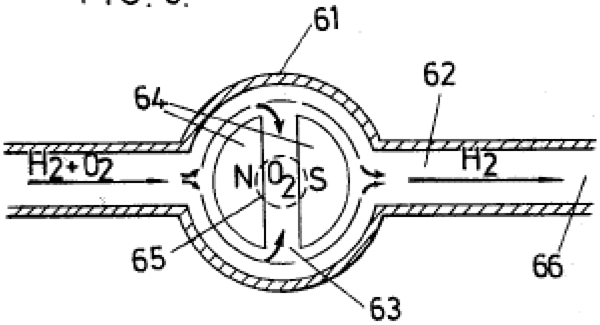

FIG. 6 illustrates an arrangement for the magnetic separation of oxygen from a mixture of oxygen and hydrogen, whereby the oxygen can be used for flame cutting. The apparatus consists of a chamber 60 containing a magnet 61 and is located in a conduit 62. A mixture of hydrogen and oxygen is passed through the conduit and around the magnet 61. The diamagnetic oxygen is diverted by the magnetic field into a transverse passageway 63 to a central conduit (not shown) leading from this passageway and thence to a flame-cutting head. The paramagnetic hydrogen continues along the conduit, past the magnet and can be allowed to escape or can be collected, as desired. If the magnet is an electromagnet it can be turned off when hydrogen and oxygen is required as a mixture, and in that case the downstream side of the conduit 62 can be closed off to prevent the loss of gas.

FIG. 7.

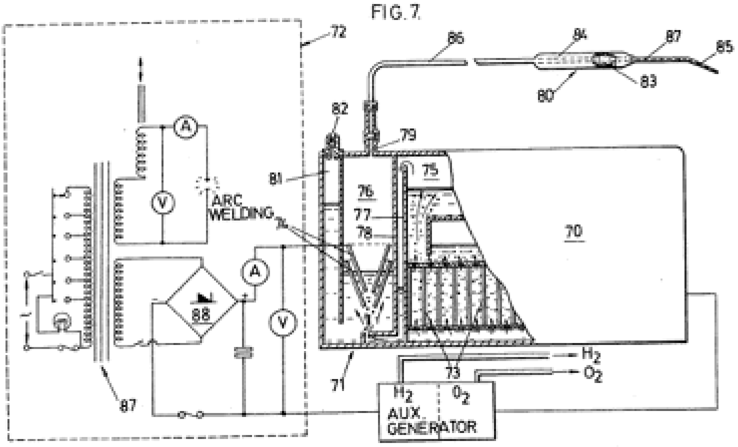

FIG. 7 illustrates a complete oxy-hydrogen generator and welding apparatus comprising a gas generator 70, a current regulating cell 71 and a power supply 72. The construction of the electrodes 73 of the generator 70 and 74 of the cell 71 are identical with those illustrated in FIGS. 2 and 3 respectively. In this arrangement, however, the gas generator 70 and cell 71 are combined as an integrated unit and as such has some features not found in the arrangements shown in FIGS. 2 and 3. In particular the chamber 75 of the generator 70 and the chamber 76 of the current regulator cell 71 are separated by two partitions 77 and 78 defining between them

a passageway communicating between the two chambers. The respective electrodes of the cell 71 and a generator 70 are connected electrically in series with the power supply.
Gas produced by electrolysis in the chamber 75 rises into the space in the chamber above the electrodes 73, passes down the passageway between the partitions 77 and 78, bubbles through the electrolyte in the chamber 76 and thence passes through an outlet opening 79 to a burner 80. An air trap reservoir 81 is formed integrally with the cell 71 and is in liquid communication therewith through an opening between the bottom of the reservoir and the cell. When the pressure of the gas generated by the generator 70 rises, this pressure causes the electrolyte in the chamber 76 to be displaced into the reservoir 81 resulting in a reduction of the current being passed to the generator 70 by the mechanism previously described in relation to FIG. 3 of the drawings. In this way the cell 71 effectively monitors the gas pressure and regulates the current to maintain an approximately constant pressure. To ensure against the possibility that the pressure should accidentally exceed a predetermined maximum safe value, a spring-loaded safety pressure valve 82 is provided at the top of the reservoir 81 to release the excess pressure into the atmosphere.

The burner 80 is provided with a flash-back arrestor in the form of a porous ceramic pellet 83 located in the gas flow path between the handle part 84 of the burner and the burner tip 85. The flash-back arrestor acts by quenching any flame blowing back into the burner before the flame has a chance to reach the hose 86 connecting the burner with the gas generator.
The power supply is of the universal type, that is, it is provided with a transformer 87 connectable to an alternating current electrical supply and provided with a number of electrical outlets for various purposes. One winding of the transformer is connected to a bridge rectifier which provides the DC current for the gas generator. Another winding is used for arc welding or can be used to supply an arc for atomic oxy-hydrogen welding. It will be appreciated that the transformer is optional and that the generator can be connected directly to the mains. In fact the bridge rectifier is not essential either and can be omitted if desired.

In the operation of apparatus of the type described it is often required to conveniently change between neutral and oxidizing flames, for example when changing from a welding operation to a cutting operation and the present invention makes provision for the variation of these functions. Briefly, in accordance with the present invention, apparatus for either oxy-hydrogen welding or cutting may comprise a first electrolytic generator for generating hydrogen and oxygen by the electrolysis of water in substantially stoichiometric proportions to produce a neutral flame and a further electrolytic generator from which hydrogen and oxygen are separately delivered, which means for adding either the hydrogen from this further cell, or the oxygen from the further generator to the gas mixture obtained from the first generator. This arrangement results in a most efficient combination of functions when a neutral flame or other is required. The hydrogen gas produced by the further generator, when added to the flame mixture, burns with atmospheric oxygen thereby producing a reducing flame. When an oxidizing flame is required, the additional hydrogen is cut off and the oxygen produced by the further generator is added to the flame mixture. It will be appreciated that various designs can be employed for either generator, for example, they may be completely independent or they may share a common electrolyte. The further gas generator can also, in practice, be made somewhat smaller than the other generator since it does not have to produce the bulk of the gas required.

It has been found that welding with hydrogen and oxygen in an exact 2 to 1 ratio (as when the gases are produced electrolytically) results in a particularly clean, oxide free welded surface and a strong welded joint. For the same quality welding to be produced by conventional gas welding technique substantially greater skill is required and, in the case of conventional hydrogen welding, for example, good welded joints are obtained only with great difficulty due to the extreme difficulty in obtaining and maintaining a neutral flame. With the method of the present invention there is no difficulty in obtaining a neutral flame, and hence the ease with which high quality welds can be obtained.

Finally, it can sometimes be convenient to store hydrogen and/or oxygen, generated electrolytically in a specially designed container, or to slowly accumulate these gases and then, when required, using the accumulated stored gas for extra heavy work for a short time. It is quite hazardous to pressurize a mixture of hydrogen and oxygen under very high pressures, of course, but it is possible, in accordance with one aspect of the invention, to store a useful amount of gas in a relatively small volume at low pressures and this can be done by using a highly gas absorbent metal in the storage container. The metal palladium, for example, can absorb up to 900 times its own volume of hydrogen and can be used with advantage for this application. In fact useful amounts of hydrogen, for small scale brazing work can readily be stored in a small hand held container, containing a gas absorbent material.

Brown’s Gas Schweißgeräte werden von verschiedenen Firmen in den USA, Italien Korea und China (Fa. B.E.S.T. Norinco) z.T. seit 40 Jahren hergestellt. Die Firma B.E.S.T. in Korea (http://www.browngas.com) bietet bereits seit einigen Jahren eine breite Palette an Geräten, auch für den stationären Einsatz, auf dem koreanischen Markt an. Die Geräte wurden laufend weiter entwickelt und die Firma Eagle-Research in Kanada bietet seit 2003 leichte und zuverlässige Geräte ebenfalls in einer Kleinserie an.

4.0.3.3. Chambers Stephen B.; USP #: 6,126,794; October 3, 2000;

Apparatus for Producing Orthohydrogen and/or Parahydrogen

An apparatus for producing orthohydrogen and/or parahydrogen. The apparatus includes a container holding water and at least one pair of closely-spaced electrodes arranged within the container and submerged in the water. A first power supply provides a particular first pulsed signal to the electrodes. A coil may also be arranged within the container and submerged in the water if the production of parahydrogen is also required. A second power supply provides a second pulsed signal to the coil through a switch to apply energy to the water. When the second power supply is disconnected from the coil by the to switch and only the electrodes receive a pulsed signal, then orthohydrogen can be produced. When the second power supply is connected to the coil and both the electrodes and coil receive pulsed signals, then the first and second pulsed signals can be controlled to produce parahydrogen. The container is self-pressurized and the water within the container requires no chemical catalyst to efficiently produce the orthohydrogen and/or parahydrogen. Heat is not generated, and bubbles do not form on the electrodes.

BACKGROUND OF THE INVENTION

1. Field of the Invention

The present invention relates to an apparatus for producing orthohydrogen and parahydrogen.

2. Description of Related Art

Conventional electrolysis cells are capable of producing hydrogen and oxygen from water. These conventional cells generally include two electrodes arranged within the cell which apply energy to the water to thereby produce hydrogen and oxygen. The two electrodes are conventionally made of two different materials.

However, the hydrogen and oxygen generated in the conventional cells are generally produced in an inefficient manner. That is, a large amount of electrical power is required to be applied to the electrodes in order to produce the hydrogen and oxygen. Moreover, a chemical catalyst such as sodium hydroxide or potassium hydroxide must be added to the water to separate hydrogen or oxygen bubbles from the electrodes. Also, the produced gas must often be transported to a pressurized container for storage, because conventional cells produce the gases slowly. Also, conventional cells tend to heat up, creating a variety of problems, including boiling of the water. Also, conventional cells tend to form gas bubbles on the electrodes which act as electrical insulators and reduce the function of the cell.

Accordingly, it is extremely desirable to produce a large amount of hydrogen and oxygen with only a modest amount of input power. Furthermore, it is desirable to produce the hydrogen and oxygen with "regular" tap water and without any additional chemical catalyst, and to operate the cell without the need for an additional pump to pressurize it. It would also be desirable to construct the electrodes using the same material. Also, it is desirable to produce the gases quickly, and without heat, and without bubbles on the electrodes.

Orthohydrogen and parahydrogen are two different isomers of hydrogen. Orthohydrogen is that state of hydrogen molecules in which the spins of the two nuclei are parallel. Parahydrogen is that state of hydrogen molecules in which the spins of the two nuclei are antiparallel. The different characteristics of orthohydrogen and parahydrogen lead to different physical properties. For example, orthohydrogen is highly combustible whereas parahydrogen is a slower burning form of hydrogen. Thus, orthohydrogen and parahydrogen can be used for different applications. Conventional electrolytic cells make only orthohydrogen and parahydrogen. Parahydrogen, conventionally, is difficult and expensive to make.

Accordingly, it is desirable to produce cheaply orthohydrogen and/or parahydrogen using a cell and to be able to control the amount of either produced by the cell. It is also desirable to direct the produced orthohydrogen or parahydrogen to a coupled machine in order to provide a source of energy for the same.

SUMMARY OF THE INVENTION

It is therefore an object of the present invention to provide a cell having electrodes and containing water which produces a large amount of hydrogen and oxygen in a relatively small amount of time, and with a modest amount of input power, and without generating heat.

It is another object of the present invention for the cell to produce bubbles of hydrogen and oxygen which do not bunch around or on the electrodes.

It is also an object of the present invention for the cell to properly operate without a chemical catalyst. Thus, the cell can run merely on tap water. Moreover, the additional costs associated with the chemical catalyst can be avoided.

It is another object of the present invention for the cell to be self-pressurizing. Thus, no additional pump is needed.

It is another object of the present invention to provide a cell having electrodes made of the same material. This material can be stainless steel, for example. Thus, the construction of the cell can be simplified, and corresponding costs reduced.
It is another object of the present invention to provide a cell which is capable of producing orthohydrogen, parahydrogen or a mixture thereof and can be controlled to produce any relative amount of orthohydrogen and parahydrogen desired by the user.

It is another object of the invention to couple the gaseous output of the cell to a device, such as an internal combustion engine, so that the device may be powered from the gas supplied thereto.

These and other objects, features, and characteristics of the present invention will be more apparent upon consideration of the following detailed description and appended claims with reference to the accompanying drawings, wherein like reference numerals designate corresponding parts in the various figures.

Accordingly, the present invention includes a container for holding water. At least one pair of closely-spaced electrodes are positioned within the container and submerged under the water. A first power supply provides a particular pulsed signal to the electrodes. A coil is also arranged in the container and submerged under the water. A second power supply provides a particular pulsed signal through a switch to the electrodes.

When only the electrodes receive a pulsed signal, then orthohydrogen can be produced. When both the electrodes and coil receive pulsed signals, then parahydrogen or a mixture of parahydrogen and orthohydrogen can be produced. The container is self pressurized and the water within the container requires no chemical catalyst to efficiently produce the orthohydrogen and/or parahydrogen.

BRIEF DESCRIPTION OF THE DRAWINGS

FIG. 1 is a side view of a cell for producing orthohydrogen including a pair of electrodes according to a first embodiment of the present invention;

FIG.1

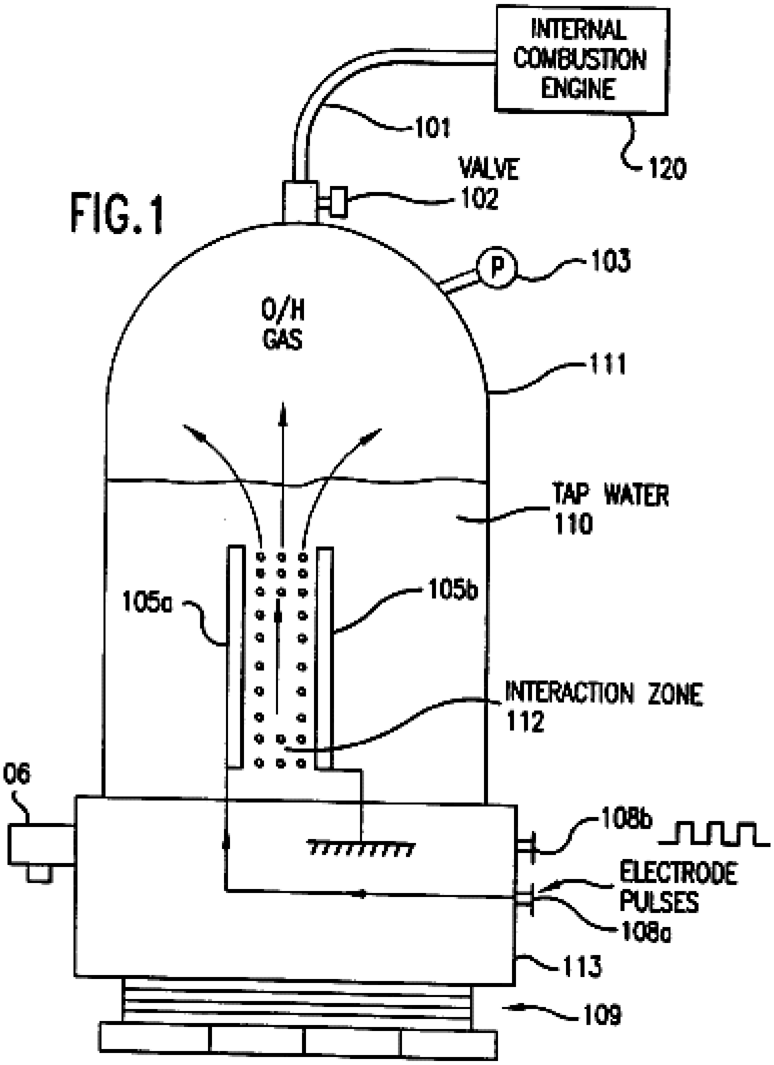

FIG. 2 is a side view of a cell for producing orthohydrogen including two pairs of electrodes according to a second embodiment of the present invention;

FIG.2

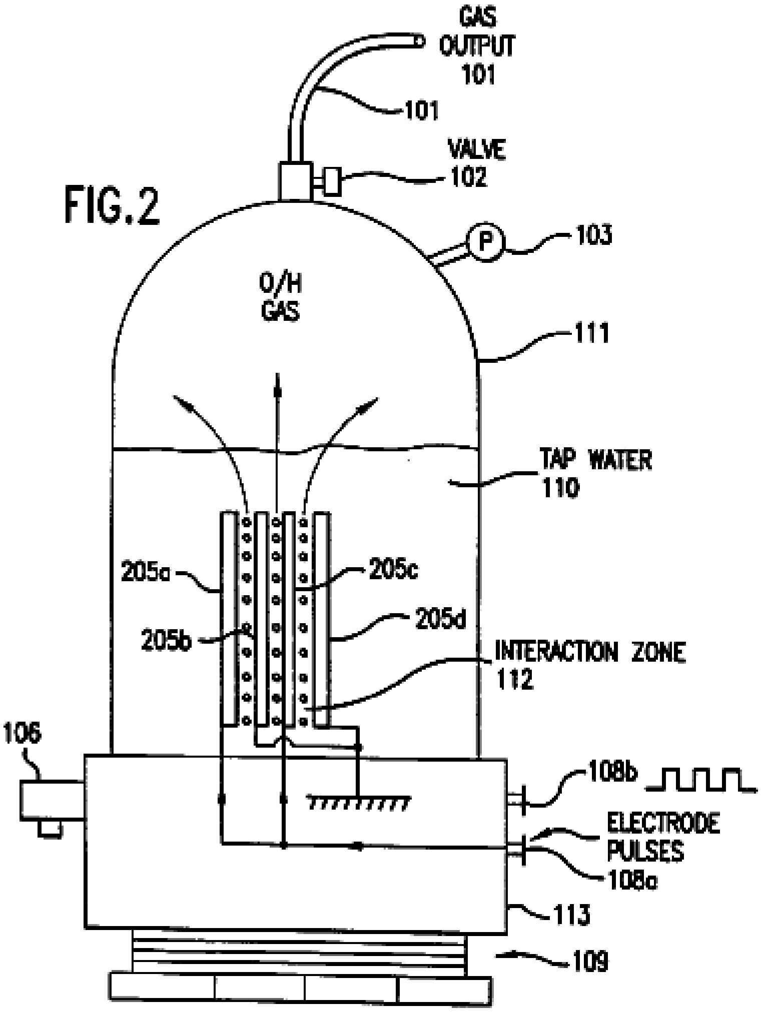

FIG. 3 is a side view of a cell for producing orthohydrogen including a pair of cylindrical-shaped electrodes according to a third embodiment of the present invention;

FIG.3

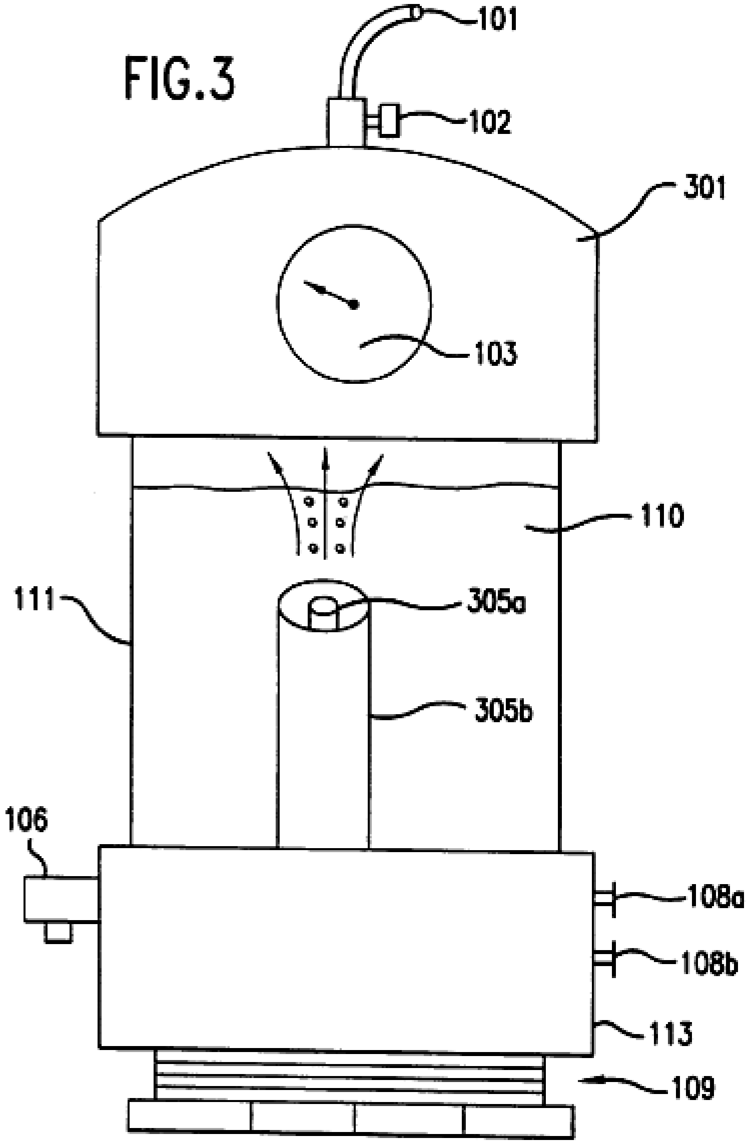

FIG. 4a is a diagram illustrating a square wave pulsed signal which can be produced by the circuit of FIG. 5 and applied to the electrodes of FIGS. 1-3;

FIG. 4a

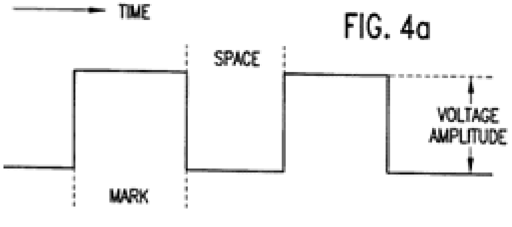

SQUARE WAVE WITH 1:1 MARK-SPACE RATIO

FIG. 4b is a diagram illustrating a saw tooth wave pulsed signal which can be produced by the circuit of FIG. 5 and applied to the electrodes of FIGS. 1-3;

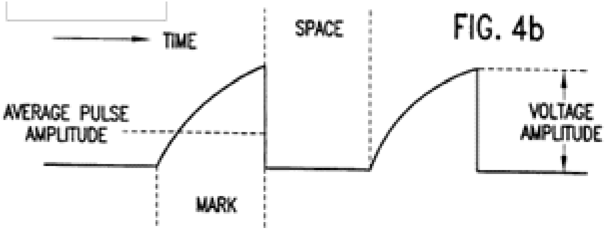

FIG. 4b

SAWTOOTH WAVE WITH 1:1 MARK SPACE RATIO
A SAWTOOTH WAVE WILL ONLY REACH PEAK VOLTAGE
AT THE END OF THE PULSE DURATION

FIG. 4c is a diagram illustrating a triangular wave pulsed signal which can be produced by the circuit of FIG. 5 and applied to the electrodes of FIGS. 1-3;

FIG. 4c

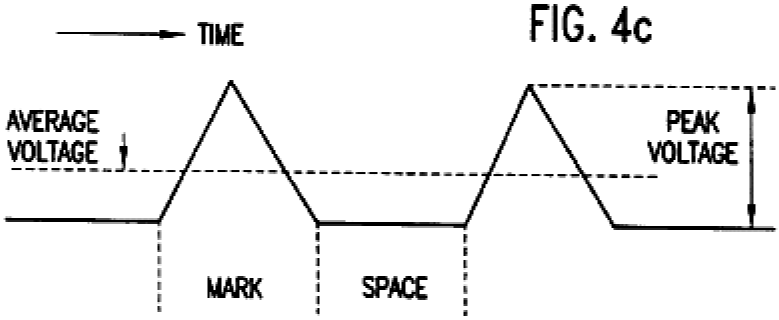

TRIANGULAR WAVE WITH 1:1 MARK SPACE RATIO
A TRIANGULAR WAVE HAS A LOW PEAK VOLTAGE

FIG. 5 is an electronic circuit diagram illustrating a power supply which is connected to the electrodes of FIGS. 1-3;

FIG.5

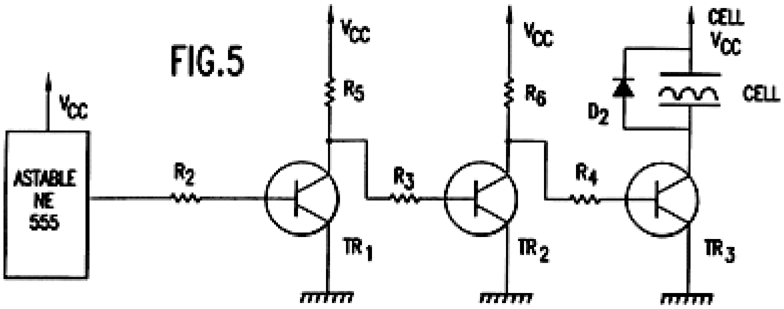

FIG. 6 is a side view of a cell for producing at least parahydrogen including a coil and a pair of electrodes according to a fourth embodiment of the present invention;

FIG.6

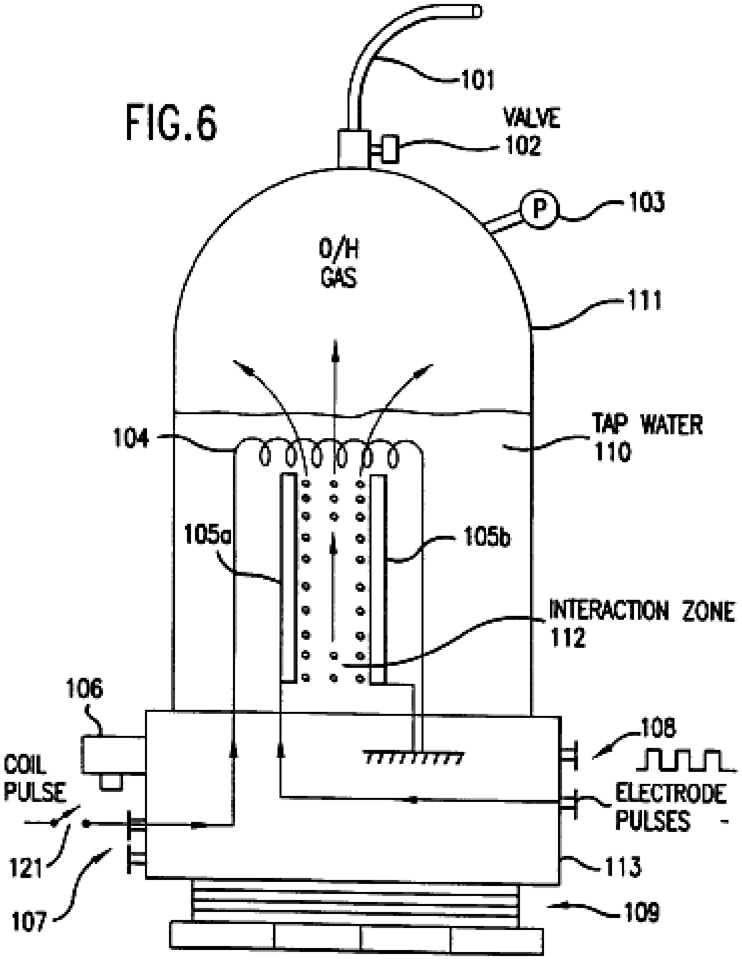

FIG. 7 is a side view of a cell for producing at least parahydrogen including a coil and two pairs of electrodes according to a fifth embodiment of the present invention;

FIG.7

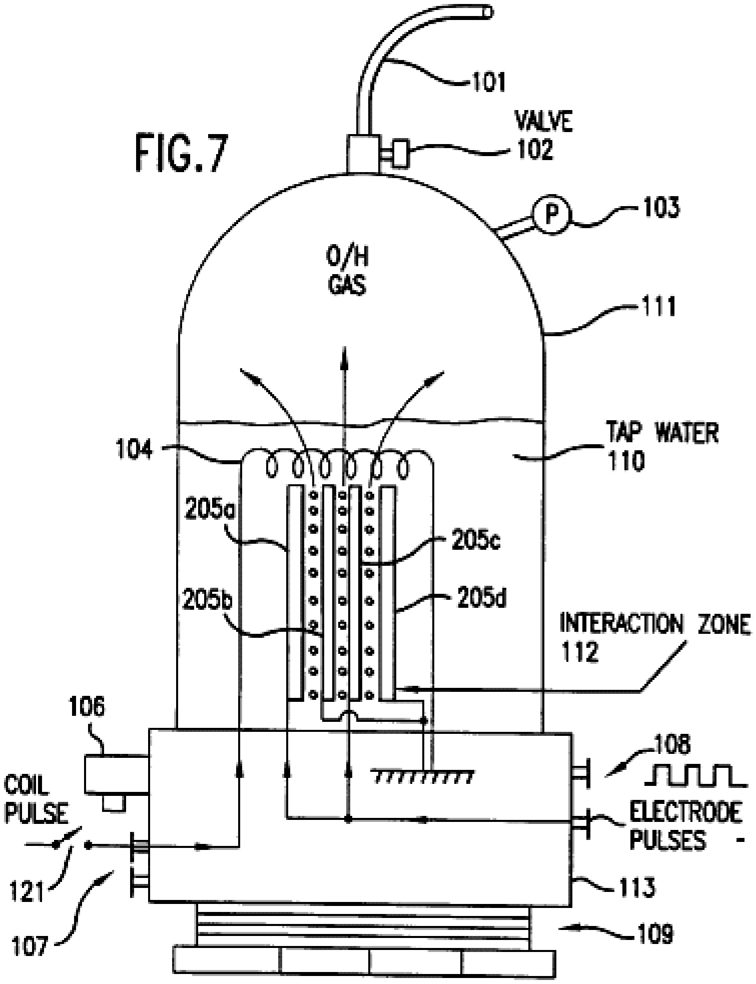

FIG. 8 is a side view of a cell for producing at least parahydrogen including a coil and a pair of cylindrical-shaped electrodes according to a sixth embodiment of the present invention; and

FIG.8

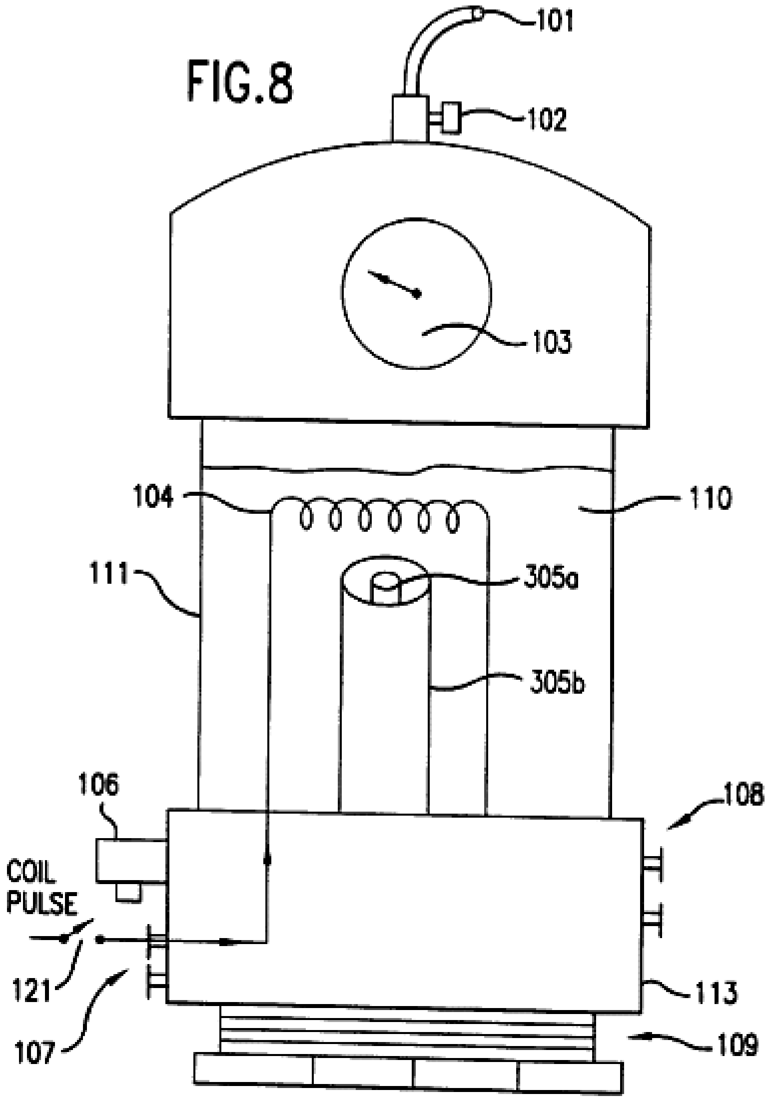

FIG. 9 is an electronic circuit diagram illustrating a power supply which is connected to the coil and electrodes of FIGS. 6-8.

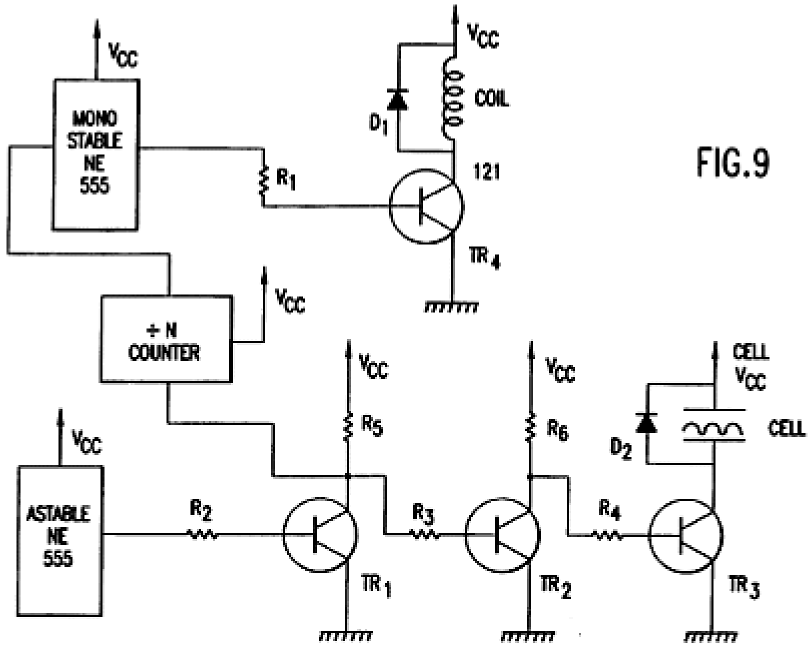

FIG.9

In order to produce an optimal amount of hydrogen and oxygen, an equal spacing between the electrodes 105a, 105b must be maintained. Moreover, it is preferable to minimize the spacing between the electrodes 105a, 105b. However, the spacing between the electrodes 105a, 105 cannot be positioned excessively close because arcing between the electrodes 105a, 105b would occur. It has been determined that a spacing of 1 mm is optimal spacing for producing hydrogen and oxygen. Spacing up to 5 mm can work effectively, but spacing above 5 mm has not worked well, except with excessive power.

Hydrogen and oxygen gas outputted through output tube 101 can be transmitted by tube 101 to a device 120 using those gases, for example an internal combustion engine, such as shown in FIG. 1. Instead of an internal combustion engine, device 120 may be any device using hydrogen and oxygen, including a reciprocating piston engine, a gas turbine engine, a stove, a heater, a furnace, a distillation unit, a water purification unit, a hydrogen/oxygen jet, or other device using the gases. With an adequately productive example of the present invention, any such device 120 using the output gases can be run continuously without the need for storing dangerous hydrogen and oxygen gases.

FIG. 2 shows a second embodiment of the present invention which includes more than one pair of electrodes 205a-d. The spacing between the electrodes is less than 5 mm as in the embodiment of FIG. 1. While FIG. 2 shows only one additional pair of electrodes, it is possible to include many more pairs (e.g.,as many as 40 pairs of electrodes) within the cell. The rest of the cell illustrated in FIG. 2 remains the same as that illustrated in FIG. 1. The multiple electrodes are preferably flat plates closely spaced, parallel to each other.

FIG. 3 illustrates a cell having a cylindrically shaped electrodes 305a, 305b. The outer electrode 305b surrounds the coaxially aligned inner electrode 305a. The equal spacing of the electrodes 305a, 305b is less than 5 mm and the interactive zone is coaxially arranged between the two electrodes 305a, 305b. While FIG. 3 illustrates the top portion of the container 111 being formed by a plastic cap 301, it will be appreciated to those skill in the art that the cap 301 may be used in the embodiments of FIGS. 1-2 and the embodiment of FIG. 3 can utilize the same container 111 illustrated in FIGS. 1-2. As suggested by FIG. 3, the electrodes can be almost any shape such as flat plates, rods, tubes or coaxial cylinders.

The electrodes 105a, 105b of FIG. 1 (or electrodes 205a-d of FIG. 2 or electrodes 305a, 305b of FIG. 3) are respectively connected to power supply terminals 108a, 108b so that they can receive a pulsed electrical signal from a power supply. The pulsed signal can be almost any waveform and have a variable current level, voltage level, frequency and mark-space ratio (i.e., a ratio of the duration of a single pulse to the interval between two successive pulses). For example, the power supply providing power to the electrodes can be a mains 110 volts to a 12 volt supply or a car battery.

FIG. 4a, FIG. 4b and FIG. 4c illustrate a square wave, a saw tooth wave and a triangular wave, respectively which can be applied to the electrodes 105a, 105b (or 205a-d or 305a, 305b) in accordance with the present invention. Each of the waveforms illustrated in FIGS. 4a-4c has a 1:1 mark-space ratio. As shown in FIG. 4b, the saw tooth wave will only reach a peak voltage at the end of the pulse duration. As shown in FIG. 4c, the triangular wave has a low peak voltage. It has been found that optimal results for producing hydrogen and oxygen in the present invention are obtained using a square wave.

After initiation of the pulsed signal from the power supply, the electrodes 105a, 105b continuously and almost instantaneously generate hydrogen and oxygen bubbles from the water 110 in the interaction zone 112. Moreover, the bubbles can be generated with only minimal heating of the water 110 or any other part of the cell. These bubbles rise through the water 110 and collect in the upper portion of the container 111.

The generated bubbles are not bunched around or on the electrodes 105a, 105b and thus readily float to the surface of the water 110. Therefore, there is no need to add a chemical catalyst to assist the conduction of the solution or reduce the bubble bunching around or on the electrodes 105a, 105b. Thus, only tap water is needed for generation of the hydrogen and oxygen in the present invention.

The gases produced within the container are self-pressurizing (i.e.,pressure builds in the container by the production of gas, without an air pump). Thus, no additional pump is needed to be coupled to the container 111 and the produced gases do no need to be transported into a pressurized container.

The power supply in the present invention is required to provide a pulsed signal having only 12 volts at 300 ma (3.6 watts). It has been found that an optimal amount of hydrogen and oxygen has been produced when the pulsed signal has mark-space ratio of 10:1 and a frequency of 10-250 KHz. Using these parameters, the prototype cell of the present invention is capable of producing gas at the rate of 1 p.s.i. per minute. Accordingly, the cell of the present invention is capable of producing hydrogen and oxygen in a highly efficient manner, quickly and with low power requirements.

As noted above, the hydrogen produced by the embodiments of FIGS. 1-3 is orthohydrogen. As is well understood by those skilled in the art, orthohydrogen is highly combustible. Therefore, any orthohydrogen produced can be transported from the container 111 through valve 102 and outlet tube 101 to be used by a device such as an internal combustion engine.

The present invention, with sufficient electrodes, can generate hydrogen and oxygen fast enough to feed the gases directly into an internal combustion engine or turbine engine, and run the engine continuously without accumulation and storage of the gases. Hence, this provides for the first time a hydrogen/oxygen driven engine that is safe because it requires no storage of hydrogen or oxygen gas.

FIG. 5 illustrates an exemplary power supply for providing DC pulsed signals such as those illustrated in FIGS. 4a-4c to the electrodes illustrated in FIGS. 1-3. As will be readily understood by those skilled in the art, any other power supply which is capable of providing the pulsed signals discussed above can be substituted therefore.

The power supply illustrated in FIG. 5 includes the following parts and their exemplary components or values:

Astable circuit NE555 or équivalent logic circuit

Resistor	R2	10K
Resistor	R3	10K
Resistor	R4	10K
Resistor	R5	2.7K
Resistor	R6	2.7K
Transistor	TR1	2N3904
Transistor	TR2	2N3904

Transistor TR3 2N3055 or any high speed, high current silicon switch Diode D2 1N4007 Capacitors (not shown) Vcc by-pass capacitors as required.

The astable circuit is connected to the base of transistor TR1 through resistor R2. The collector of transistor TR1 is connected to voltage supply Vcc through resistor R5 and the base of transistor TR2 through resistor R3. The collector of transistor TR2 is connected to voltage supply Vcc through resistor R6 and the base of transistor TR3 through resistor R4. The collector of transistor TR3 is connect to one of the electrodes of the cell and diode D2. The emitters of transistors TR1, TR2, TR3 are connected to ground. Resistors R5 and R6 serve as collector loads for transistors TR1 and TR2, respectively. The cell serves as the collector load for transistor TR3. Resistors R2, R3 and R4 serve to respectively ensure that transistors TR1, TR2 and TR3 are saturated. The diode D2 protects the rest of the circuit from any induced back emf within the cell.

The astable circuit is used to generate a pulse train at a specific time and with a specific mark-space ratio. This pulse train is provided to the base of transistor TR1 through resistor R2. Transistor TR1 operates as an invert switch. Thus, when the astable circuit produces an output pulse, the base voltage of the transistor TR1 goes high (i.e.,close to Vcc or logic 1). Hence, the voltage level of the collector of transistor TR1 goes low (i.e.,close to ground or logic 0).

Transistor TR2 also operates as an inverter. When the collector voltage of transistor TR1 goes low, the base voltage of transistor TR2 also goes low and transistor TR2 turns off. Hence, the collector voltage of transistor TR2 and the base voltage of Transistor TR3 go high. Therefore, the transistor TR3 turns on in accordance with the mark-space ratio set forth by the astable circuit. When the transistor TR3 is on, one electrode of the cell is connected to Vcc and the other is connected to ground through transistor TR3. Thus, the transistor TR3 can be turned on (and off) and therefore the transistor TR3 effectively serves as a power switch for the electrodes of the cell.

FIGS. 6-8 illustrate additional embodiments of the cell which are similar to the embodiments of FIGS. 1-3, respectively. However, each of embodiments of FIGS. 6-8 further includes a coil 104 arranged above the electrodes and power supply terminals 107 connected to the coil 104. The dimensions of the coil 104 can be, for example, 5 times.7 cm and have, for example, 1500 turns. The coil 104 is submerged under the surface of the water 110.

The embodiments of FIGS. 6-8 further include an optional switch 121 which can be switched on or off by the user. When the switch 121 is not closed, then the cell forms basically the same structure as FIGS. 1-3 and thus can be operated in the same manner described in FIGS. 1-3 to produce orthohydrogen and oxygen. When the switch 121 is closed, the additional coil 104 makes the cell capable of producing oxygen and either (1) parahydrogen or (2) a mixture of parahydrogen and orthohydrogen.

When the switch 121 is closed (or not included), the coil 104 is connected through terminals 106 and the switch 121 (or directly connected only through terminals 106) to a power supply so that the coil 104 can a receive a pulsed signal. As will be discussed below, this power supply can be formed by the circuit illustrated in FIG. 9.

When the coil 104 and the electrodes 105a, 105b receive pulses, it is possible to produce bubbles of parahydrogen or a mixture of parahydrogen and orthohydrogen. The bubbles are formed and float to the surface of the water 110 as discussed in FIGS. 1-3. When the coil is pulsed with a higher current, a greater amount of parahydrogen is produced. Moreover, by varying the voltage of the coil 104, a greater/lesser percentage of orthohydrogen/parahydrogen can be produced. Thus, by controlling the voltage level, current level and frequency (discussed below) provided to the coil 104 (and the parameters such as voltage level, current level, frequency, mark-space ratio and waveform provided to the electrodes 105a, 105b as discussed above) the composition of the gas produced by the cell can be controlled. For example, it is possible to produce only oxygen and orthohydrogen by simply disconnecting the coil 104. It is also possible to produce only oxygen and parahydrogen by providing the appropriate pulsed signals to the coil 104 and the electrodes 105a, 105b. All of the benefits and results discussed in connection with the embodiments of FIGS. 1-3 are equally derived from the embodiments of FIGS. 6-8. For example, the cells of FIGS. 6-8 are self-pressurizing, require no-chemical catalyst, do not greatly heat the water 110 or cell, and produce a large amount of hydrogen and oxygen gases from a modest amount of input power, without bubbles on the electrodes.

A considerable amount of time must pass before the next pulse provides current to the coil 104. Hence, the frequency of the pulsed signal is much lower than that provided to the electrodes 105a, 105b. Accordingly, with the type of coil 104 having the dimensions described above, the frequency of pulsed signals can be as high as 30 Hz, but is preferably 17-22 Hz to obtain optimal results.

Parahydrogen is not as highly combustible as orthohydrogen and hence is a slower burning form of hydrogen. Thus, if parahydrogen is produced by the cell, the parahydrogen can be coupled to a suitable device such as a cooker or a furnace to provide a source of power or heat with a slower flame.

FIG. 9 illustrates an exemplary power supply for providing DC pulsed signals such as those illustrated in FIGS. 4a-4c to the electrodes illustrated in FIGS. 6-8. Additionally, the power supply can provide another pulsed signal to the coil. As will be readily understood by those skilled in the art, any other power supply which is capable of providing the pulsed signals discussed above to the electrodes of the cell and the coil can be substituted therefore. Alternatively, the pulsed signals provided to the electrodes and the coil can be provided by two separate power supplies.

The portion of the power supply (astable circuit, R2-R6, TR1-TR3, D2) providing a pulsed signal to the electrodes of the cell is identical to that illustrated in FIG. 5. The power supply illustrated in FIG. 9 further includes the following parts and their respective exemplary values:

Divide by N counter 4018 BPC or equivalent logic circuit Monostable circuit NE 54 or equivalent logic circuit Resistor R1 10K Transistor TR4 2N3055 or any high speed high current silicon switch Diode D1 1N4007.

The input of the divide by N counter (hereinafter "the divider") is connected to the collector of transistor TR1. The output of the divider is connected to the monostable circuit and the output of the monostable circuit is connected to the base of transistor TR4 through resistor R1. The collector of the transistor TR4 is connected to one end of the coil and a diode D1. The other end of the coil and the diode D1 is connected to the voltage supply Vcc. The resistor Ri ensures that TR4 is fully saturated. The diode D2 prevents any induced back emf generated within the coil from damaging the rest of the circuit. As illustrated in FIGS. 6-8, a switch 121 can also incorporated into the circuit to allow the user to switch between (1) a cell which produces orthohydrogen and oxygen, and (2) a cell which produces at least parahydrogen and oxygen.

The high/low switching of the collector voltage of the transistor TR1 provides a pulsed signal to the divider. The divider divides this pulsed signal by N (where N is a positive integer) to produce an pulsed output signal. This output signal is used to trigger the monostable circuit. The monostable circuit restores the pulse length so that it has a suitable timing. The output signal from the monostable circuit is provided to the base of the transistor TR4 through resistor R1 to switch the transistor TR4 on/off. When the transistor TR4 is switched on, the coil is placed between Vcc and ground. When the transistor TR4 is switched off, the coil is disconnected from the rest of the circuit. As discussed in conjunction with FIGS. 6-8, the frequency of pulse signal provided to the coil is switched at a rate preferably between 17-22 Hz; i.e., much lower than the frequency of the pulsed signal provided to the electrodes.

As indicated above, it is not required that the circuit (divider, monostable circuit, R1, TR4 and D1) providing the pulsed signal to the coil be connected to the circuit (astable circuit, R2-R6, TR1-TR3, D2) providing the pulsed signal to the electrodes. However, connecting the circuits in this manner will provide an easy way to initiate the pulsed signal to the coil.

A working prototype of the present invention has been successfully built and operated with the exemplary and optimal parameters indicated above to generate orthohydrogen, parahydrogen and oxygen from water. The output gas from the prototype has been connected by a tube to the manifold inlet of a small one cylinder gasoline engine, with the carburetor removed, and has thus successfully run such engine without any gasoline.
Additional advantages and modifications will readily occur to those skilled in the art. Therefore, the present invention is not limited to the specific details and representative devices shown and described herein. Accordingly, various modifications may be made without departing from the spirit or scope of the invention as defined by the appended claims.

4.0.3.4. Cornish Francois P.; US #: 4,702,894; October 27, 1987;

Cornish; Francois P. ("Uitentuis", Steynsrus Road, Somerset West, Cape Province, ZA)

Hydrogen Supply Unit

Hydrogen is generated by heating a metal surface under water to a temperature at which the metal reacts with water to produce hydrogen. The hydrogen can then be used, for example, as a fuel for a motor vehicle engine or another type of engine. The heating can be done electrically by providing an electrical discharge, under water, between the metal surface and another surface. Water and the metal surface are consumed.

BACKGROUND OF THE INVENTION

This invention relates to hydrogen generation.

It has already been proposed to replace conventional fuels with hydrogen in the running of internal combustion engines. Conventional proposals are to produce hydrogen by the electrolysis of water and then to store the hydrogen in some form or another. No economically viable storage system for the highly explosive hydrogen gas has yet been evolved. Whatever system is evolved would involve fairly massive tanks of some kind or another and precautions to prevent explosions.

The present invention is based on the desire of the inventor to be able to provide hydrogen on demand from materials which are in themselves safe to handle.

SUMMARY OF THE INVENTION

According to the invention a method of generating hydrogen comprises the steps of exposing a fresh metal surface to water and heating the interface between the metal surface and the water at least to the lowest temperature at which the metal reacts with water to form a metal oxide and hydrogen, the metal being chosen from metals which are higher in the electromotive series than hydrogen and having stable and safe handling characteristics.

Preferably the metal surface is exposed, and the interface heated by pressing an electrode of the relevant metal against a second electrode under water and applying a high voltage between the electrodes while, preferably, moving the electrode surfaces relatively to one another.

In other words, in the preferred form of the invention hydrogen is formed by creating an underwater electrical discharge between two electrodes at least one of which is made of a metal as defined above.

The electrical discharge and the relative movement between the electrode surfaces ensure that fresh metal surfaces are exposed to the water while at the same time the discharge heats the interface between the electrodes and the water to the required temperature at which the metal reacts with water to form its oxide and to liberate hydrogen.

Also in the preferred form of the invention the metal is aluminium which has the advantage that it is in relatively abundant supply, relatively cheap, is formed with a protective oxide layer on its exposed surfaces and reacts with water at a relatively low temperature. Aluminium wire fed against a rotating aluminium drum has been found to give excellent results to provide hydrogen for powering small internal combustion engines.

A convenient way of securing the high voltage required is to employ the conventional distributor and coil arrangement which provides the sparking for an internal combustion engine. Two coils in parallel fed from a common distributor has been found to give excellent results. Other methods of generating high voltages from the battery or the drive shaft of an internal combustion engine may also be used.

The method of the invention lends itself in an excellent manner to supply hydrogen on demand. In this case hydrogen is fed to a small buffer store and as the pressure in the store exceeds a predetermined level, the electrodes are separated so that hydrogen generation is interrupted. As the pressure drops to a certain level the electrodes are again fed towards one another.

BRIEF DESCRIPTION OF THE DRAWING

The invention will now be further described, by way of example, with reference to the accompanying drawing, in which:

FIG. 1 is a schematic representation of apparatus for generating hydrogen, and suitable for powering a motor vehicle; and

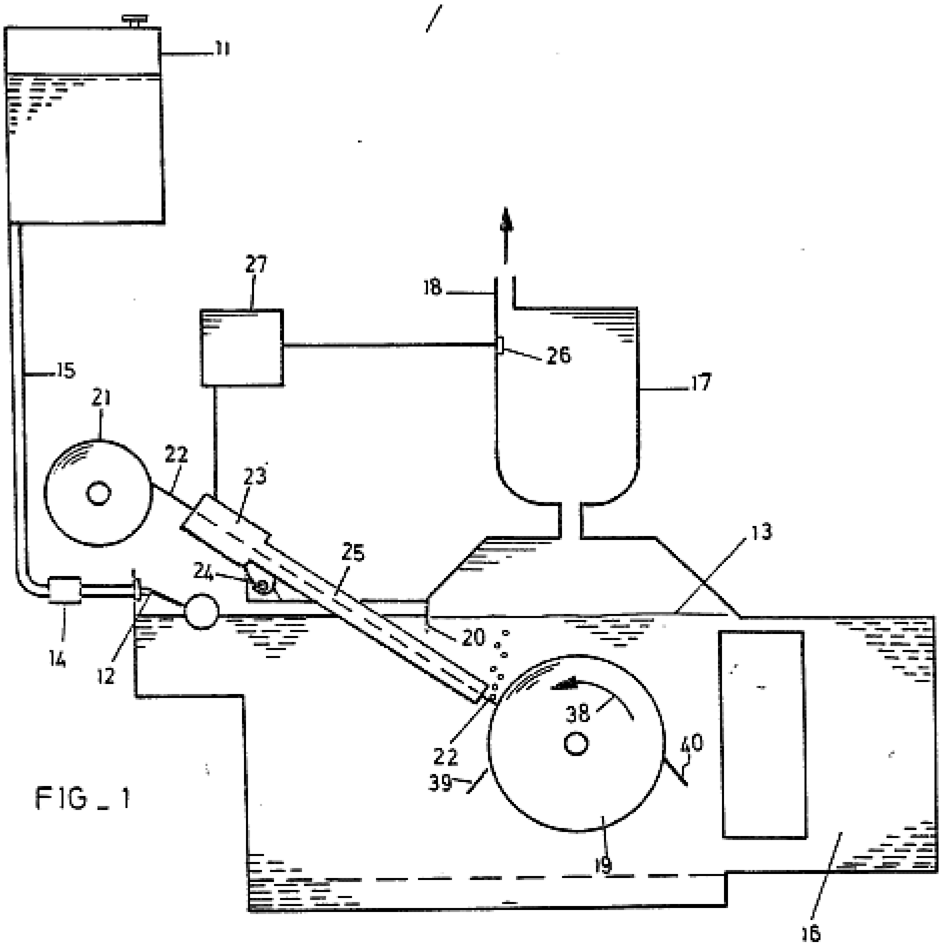

FIG_1

FIG. 2 shows a portion of an appropriate electrical circuit.

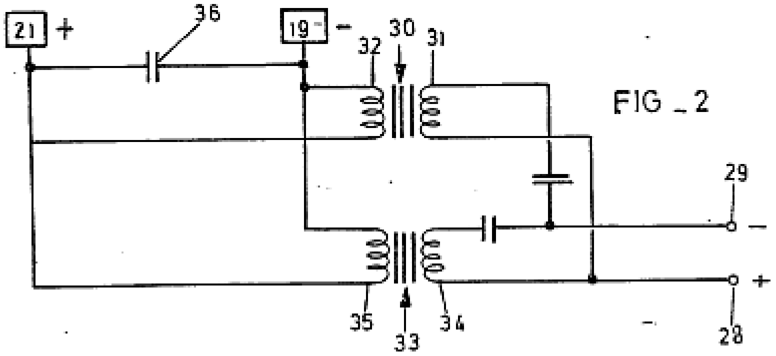

FIG_2

DESCRIPTION OF A PREFERRED EMBODIMENT

In the illustrated embodiment there is a generating tank 10 fed with water from a reservoir tank 11 through a float valve 12 to keep the water level 13 in the tank 10 substantially constant. When the apparatus is used in a motor vehicle, the tank 11 can take the place of the conventional fuel tank of the vehicle with a pump 14 in the line 15 to pump more water into the tank 10 when the position of the float 12 indicates that this is required. Water is consumed as hydrogen is generated, and so the tank 11 has to be periodically refilled. The generating tank 10 is in communication with an aircooled heat exchanger 16, which may take the same form as a conventional motor car radiator.

The generating tank 10 is surmounted by a collecting vessel 17 from which hydrogen is drawn through a restricted orifice 18 of an internal combustion engine. Inside the tank 10 there is a drum 19 driven by any suitable means to rotate at a constant speed. The drum 19 is made of aluminium. A depending flange 20 provides a water seal to the top lefthand corner of the tank 10, so that that corner is not in gas communication with the vessel 17.

A coil 21 of aluminium wire 22 is fed through a push-pull unit 23 of the kind used to feed welding wire to argon arc welding devices. The unit 23 is arranged to feed the wire against the surface of the drum 19 and to traverse the wire along the length of the drum on a bar 24. The wire passes along an insulating sleeve 25 which enters the tank 10 through a suitable wiper seal.

In the vessel 17 there is a pressure sensor 26 connected to a control unit 27. When the pressure sensor senses a pressure above a predetermined value, it signals the control unit 27 which in turn stops the unit 23 so that wire is no longer fed towards the drum 19. When the pressure drops again, feeding is resumed.

In use, the coil 21 is connected to the hightension side of two ignition coils or transformers 30 and 33. These transformers have primary windings 31 and 34 and secondary, high tension windings 32 and 35. A capacitor 36 is connected across the high tension connections. The terminals 28 and 29 are connected to a conventional vehicle battery.

At the point of contact between the end of the wire 22 and the drum 19 an electrical discharge takes place. As a result the adjacent metal surfaces are heated to a high temperature, the protective oxide film which naturally forms on exposed aluminium surfaces is disrupted, and the exposed aluminium surfaces react with the water. In fact the electrochemical situation at the interface is such that the wire 22 is consumed, with the following reaction taking place.

2Al+3H.sub.2 O.fwdarw.Al.sub.2 O.sub.3 +3H.sub.2

As a result, hydrogen bubbles from the contact point while the aluminium oxide collects as a white powder in the base of the tank 10. A grid 37 in the bottom of the tank allows the powder to pass through, and then keeps the powder substantially free from currents in the tank 10. The hydrogen passes through the vessel 17 and the orifice 18 to the carburettor of an internal combustion engine.

There may be a tendency for bubbles of hydrogen to adhere to the surface of the drum 19 which rotates in the direction indicated by the arrow 38. To prevent this happening, a wiper blade 39 can be located in the position shown in FIG. 1, so as to separate any adhering bubbles from the drum surface.

Alternatively, a wiper blade 40 may be arranged on the opposite side of the drum. In this case a small volume of hydrogen gas may collect beneath this blade and it may be possible to pivot the blade 40, thus releasing this pocket of hydrogen in order to facilitate start-up of an engine fuelled by the hydrogen.

It may be possible to use salt water in the tank 10, rather than fresh water.

The drum 19 preferably rotates at a speed between 400 and 700 rpm, but the rotation may be as slow as 50 rpm.

During operation, the temperature of the water in the tank 10 may rise as high as 95.degree. C., although it is likely that a unit mounted in a moving vehicle, for example, will be able to maintain the water at a lower temperature.

A unit substantially as shown in the drawings has been used to drive a 500 cc motor cycle engine. The wire 22 had a diameter of 1,6 mm and was of commercial purity (98% Al). The unit produced over 1000 cc of hydrogen a minute, with an aluminium wire consumption rate of 140 to 180 cm per minute. The rate of deposition of aluminium oxide was about 4 kilograms per 500 kilometres travelled.

Conventional modifications were made to the carburettor to enable the engine to run on a mixture of hydrogen and air.
The wire 22 carries a voltage of about 18000 volts with a current of about 1 amp.
The invention may equally be used to power stationary industrial engines, as well as motor vehicle engines.

4.0.3.5. Dotto Gianni, US Patent # 3,839,771;
Method for constructing of a thermionic couple

Gianni Dotto is an italo/american electrical engineer and inventor who has described a way of separating distilled water into hydrogen and oxygen, releasing the oxygen and capturing the hydrogen for use in an internal combustion engine (motor car) or just for heating purposes.

He develops a method of separating water into hydrogen and oxygen by magnetic action after vaporisation accompanied by heating.

Here is how he describes his method:

With a Diesel injection pump, bring distilled water up to 240 bar of pressure, feeding it into a one meter long 1/4 “ stainless-steel tube connected to a very strong expansion valve such as those used for air conditioning or house gas supply. This is enough to convert the water into a very thin moisture vapor.

From the first expansion valve, using a four meters long 1/4 " stainless steel tube that must be maintained at a temperature of at least 90°C, connect to a second Diesel injection pump, followed by a second expansion valve, working at 120 bar. The outgoing tube would carry a hydrogen/oxygen gas mixture.

At the end of a five meter 3/16 " stainless steel tube, connect a very strong Al nickel permanent magnet with one 1/4 " hole intake but several outlet holes arranged in a star configuration, with a total of at least 6 outlet holes, each with a diameter of 3/32 " alternately having a strong positive and negative magnetisation.

Oxygen gas would come out of the negatively magnetised holes, to be liberated into the atmosphere, while the hydrogen gas coming out of the positively magnetised holes should be collected in a conventional methane tank to be used for running the internal combustion engine. The methane type tank would be used to store hydrogen produced over the engine's need, and as a backup for cold starting purposes.

Although the data is not yet independently verified, I would see no harm in someone trying out to see if the method has merit.

METHOD FOR CONSTRUCTING A THERMIONIC COUPLE

A method for constructing a thermionic couple comprising an apparatus in the form of a ring or loop of metal such as copper having high electrical and thermal conductivity. The ring has spaced ends forming a gap joined by a bridge member formed of material having significantly lower electrical and thermal conductivity than the ring. A substantial thermal unbalance is induced between the junctions of the ring and the bridge member. The width of the gap and the effective length of the bridge member is adjusted to produce a recurrent cyclic thermoelectric unbalance, resulting in repeated changes in the energy level of the metal atoms of the ring.

This is a continuation of application Ser. No. 42,301 filed June 1, 1970, now abandoned.

SUMMARY OF THE INVENTION

In a typical embodiment of the present invention, an electrically and thermally conductive metal strip has end portions thereof bridged by a member of a material having substantially different thermoelectric properties. Means are provided to establish a substantial temperature difference between the opposite end portions of the metal strip and bridge member, with an appropriate adjustment being made with respect to the point of connection of the bridge to one end portion of the strip, to provide a loop wherein oscillation involving high electrical excursions occurs, resulting in continuing changes in energy levels of the metal atoms in the strip.

FIG. 1 is a plan view of one embodiment of the apparatus. FIG. 2 is an enlarged fragmentary section showing detail of the bridge member and opposite ends of the ring of the embodiment of my invention shown in FIG. 1.

DESCRIPTION OF THE PREFERRED EMBODIMENTS

Referring now to FIGS. 1 and 2, a ring or loop 56 is formed with spaced apart ends or ears 57 defining a gap therebetween. In an embodiment of the invention constructed and operated successfully, the ring was formed of a copper bar having a width of 9 inches and a thickness of 1/2 inch, formed into a loop of approximately 27 inches in diameter, with a gap between the ears 57. The copper material used was an annealed copper having a purity of 99.99 percent copper, and an electrical resistivity of [1.7 microhm-cm] ohms-circular mil per foot at 20.degree.C. This is the international standard of resistance for annealed copper and is equal to 100 percent electrical conductivity. The thermal conductivity of this copper is in the order of 1 calorie per second through a thickness of 1 centimeter and across an area of one square centimeter at a temperature difference of 1.degree.C.

On the outer sides of the ears 57 there are blocks 58 of insulating material which are both electrically and thermally insulative. Insulating tubes 59 (one shown in FIG. 2) extend through the blocks 58 and the ears 57, providing an insulating passage for bolts 61 having suitable threaded fasteners 62 at one or both ends. This provides a means for adjusting the gap between the ears 57 without short circuiting across the gap either thermally or electrically.

Attached to the ears 57, as by brazing or the like, is a bridge member 63 forming a separate "short circuit" electrical and thermal path between the ears, apart from the continuity of the bar. The bridge member is formed of one or more rods of a metal alloy such as Constantan, which is an alloy of essentially 60 percent copper and 40 percent nickel, having a significantly lower electrical and thermal conductivity than the copper bar and hence a significantly higher electrical and thermal resistance than the ring 56. For example, Constantan has an electrical resistivity in the order of 49 microhm-centimeter at 20.degree.C. and a thermal conductivity in the order of 0.054 calories per second through a thickness of 1 centimeter across one square centimeter at a temperature of 1.degree.C.

A means for heating one end of the ring 56 is provided in the form of an electrical heater 64 connected to a suitable source of electrical power, and in the case of the specific device disclosed, having a capacity of 6000 watts and a heat exchanging area on the order of 200 in..sup.2. A means for cooling the other end of the ring 56 is provided in the form of a refrigerating coil 66 connecting through suitable tubing to a refrigerating unit 67. In the case of the specific device disclosed, the refrigerating unit has a cooling capacity of 10,000 B.T.U., and the cooling coil 24 has a heat exchanging area on the order of 200 square inches.

A twochannel recording electroencephalograph 68 (FIG. 1) has one of its channels connected to the ears 57, to record the potential difference between the junctions of the ears and the bridge member. While operating the heating and cooling means, and observing the output of the oscillograph, the apparatus is initially "tuned" by fastening one end of the bridge member 63 to one of the ears 57, having the other end of the bridge member in contact with the other ear, and adjusting the threaded fasteners of the bolts 61 until the output of the oscillograph is observed to fluctuate in recurrent cyclic fashion. When this condition is achieved, the other end of the bridge member 63 is brazed to the other ear 57 of the ring.

Potential differences between the ears 57 have been recorded in the order of 0.156 millivolts, and the electrical resistance of the ring is in the order of 5.27 .times. 10.sup.-.sup.6 ohms. According to Ohm's Law, these conditions would indicate a current in the order of 30,000 amperes, at a frequency which, from observing the oscillograph readings, is in the order of 100 Kilocycles per second. With modulation frequency of 10 Kilocycles.

It appears that in operation of the device there is a change caused in the energy level of the electrons of the metal (copper) atoms, which is exhibited in a form of electron acceleration around the ring. No electron emission from the ring has been observed, by irradiating the ring with ultraviolet light during operation of the device whereupon a pale blue-white "halo" appears about the ring or by enclosing the ring in a foggy chamber "curie" method. On the other hand, if a bar of cadmium is positioned in the center of the ring and the bar is heated high enough to thermally increase the kinetic energy of the outer orbit electrons to a point where their kinetic energy (1/2 MV.sup.2) will be greater than the work function and allow discharge into space;

the electron will be attracted by the proton energy of the ring. The phenomenon is shown by the deposit of cadmium on the internal service of the copper ring as if cadmium plated.

It is sometimes desirable to maintain the magnetic field of the ring between 240 and 160 Gauss. The amount of energy is determined by the temperature difference and the amount of the resistance in the ring. The high temperatures are obtained by conventional electrical heaters. As an example, a heater having three elements, each one with a 1000 watt rating, may be used. It is desirable to obtain a temperature of about 600.degree. to 800.degree. Fahrenheit. For the cold side a conventional coil like that of a freezer cabinet can be used, and connected to a refrigeration compressor.

PATENTED OCT 8 1974 3.839.771

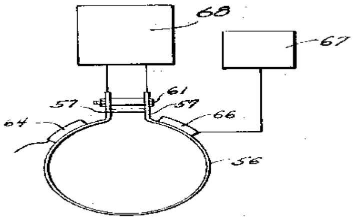

FIG. 1

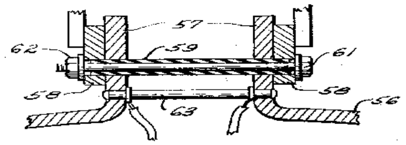

FIG. 2

4.0.3.6. Garrett Charles H. US Patent: 2,006,676; July 2, 1935 ~ Cl. 204-5

Best documented and proven by Dad Garett and son in Dallas: Their 4 cylinder automobile run 1935 on water from White Rock Lake ... the trick is the carburator fed from a hydrolysis unit containing 25% battery acid (sulphuric) continually mixed with 75% water...?

Electrolytic Carburettor

This invention relates to carburettors and it has particular reference to an electrolytic carburettor by means of which water may be broken up into its hydrogen and oxygen constituents and the gases so formed suitably mixed with air.

The principal object of the invention is to provide in a device of the character described, a mechanism by means of which water may be readily decomposed into its constituents, and the constituents intimately mixed with each other and with air.

Another object of the invention is to provide means whereby the electrolyte level in the carburettor may be maintained at a more or less constant level regardless of fluctuations in fluid pressure at the fluid inlet of the carburettor.

Another object of the invention is to provide means whereby the relative amount of air mixed with the hydrogen and oxygen may be regulated as desired.

Still another object of the invention is the provision of means to prevent loss of hydrogen and oxygen gases during periods in which these gases are not being drawn from the carburettor.

Still another object of the invention is the provision of means whereby the hydrogen and oxygen resulting from electrolysis may be formed in separate compartments, and a further object of the invention is the provision of means to periodically reverse the direction of current flow and thereby alternate the evolution of the gases in the separate compartments, to be later intermingled.

With the foregoing objects as paramount, the invention has particular reference to its salient features of construction and arrangement of parts, taken in connection with the accompanying drawings, wherein: -

Figure 1 is a view in vertical section of one form of carburettor.

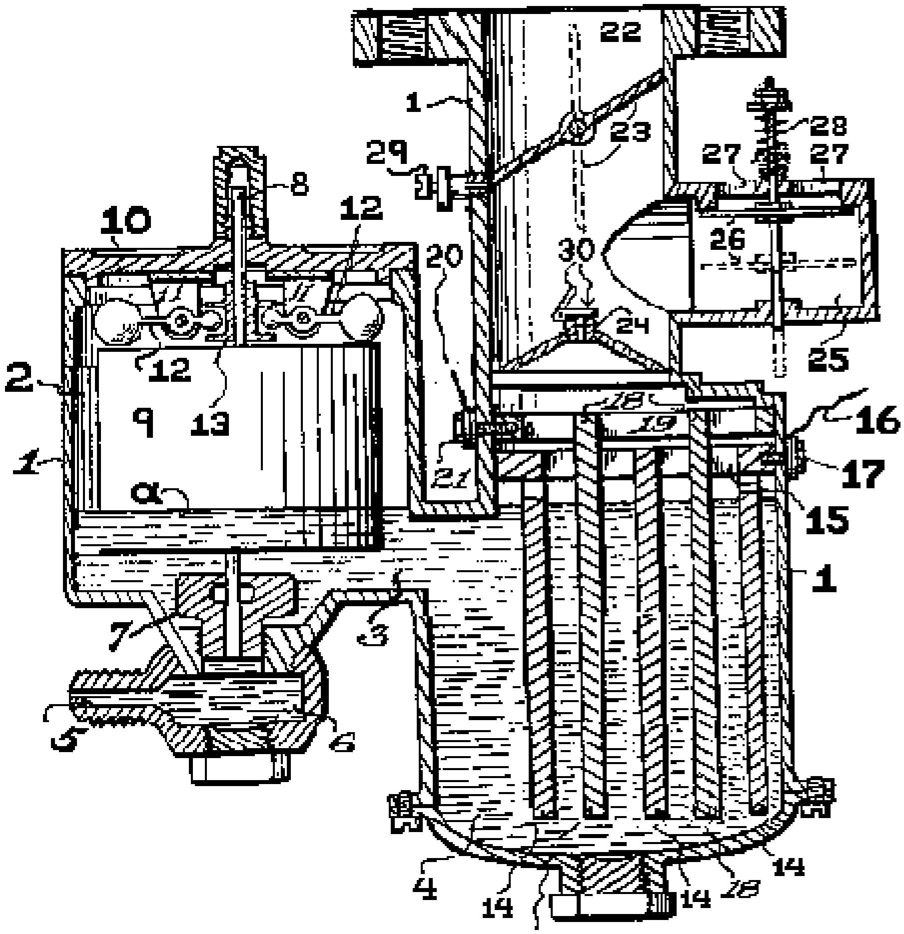

Figure 2 is a modified form.

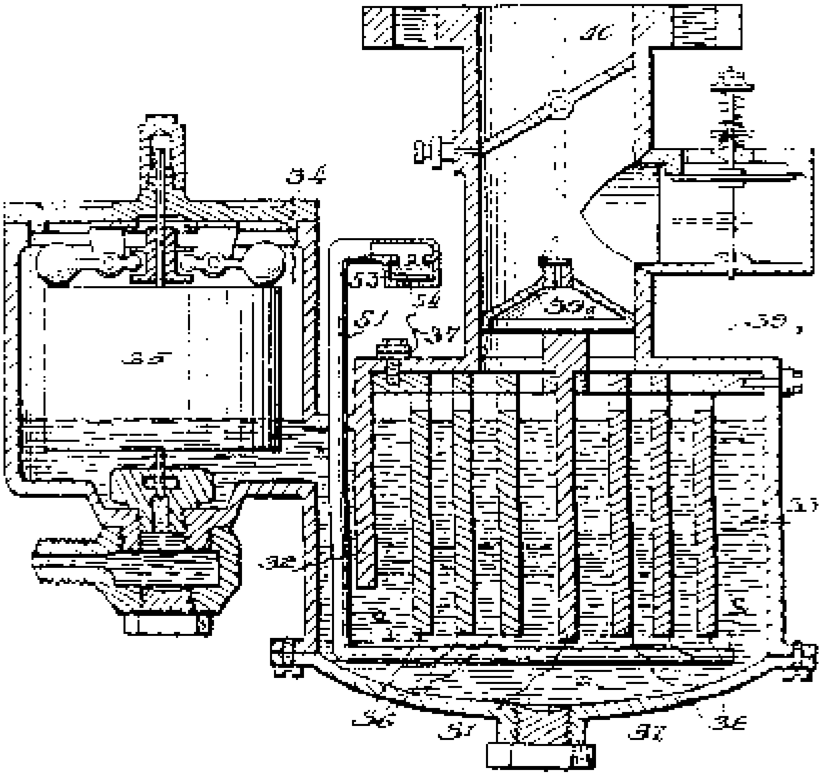

Figure 3 is a diagrammatic view of a pole changer, showing its actuating mechanism, and

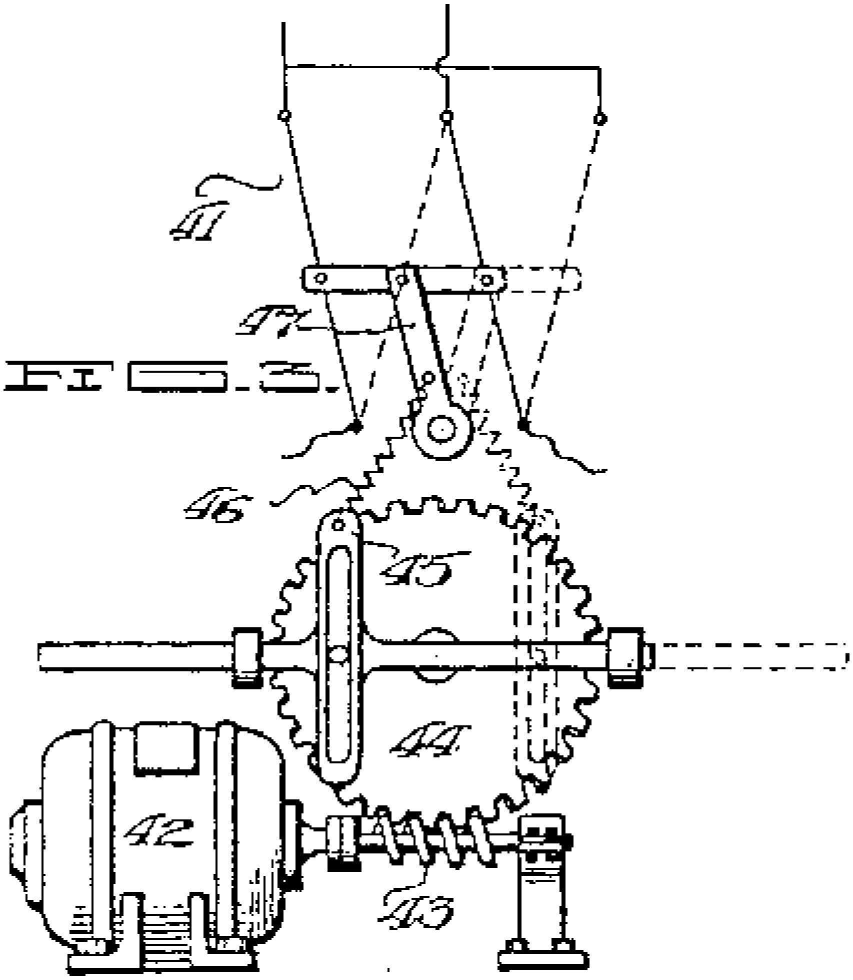

FIG. 3.

Figure 4 is a wiring diagram for the modified form of carburettor shown in Figure 2.

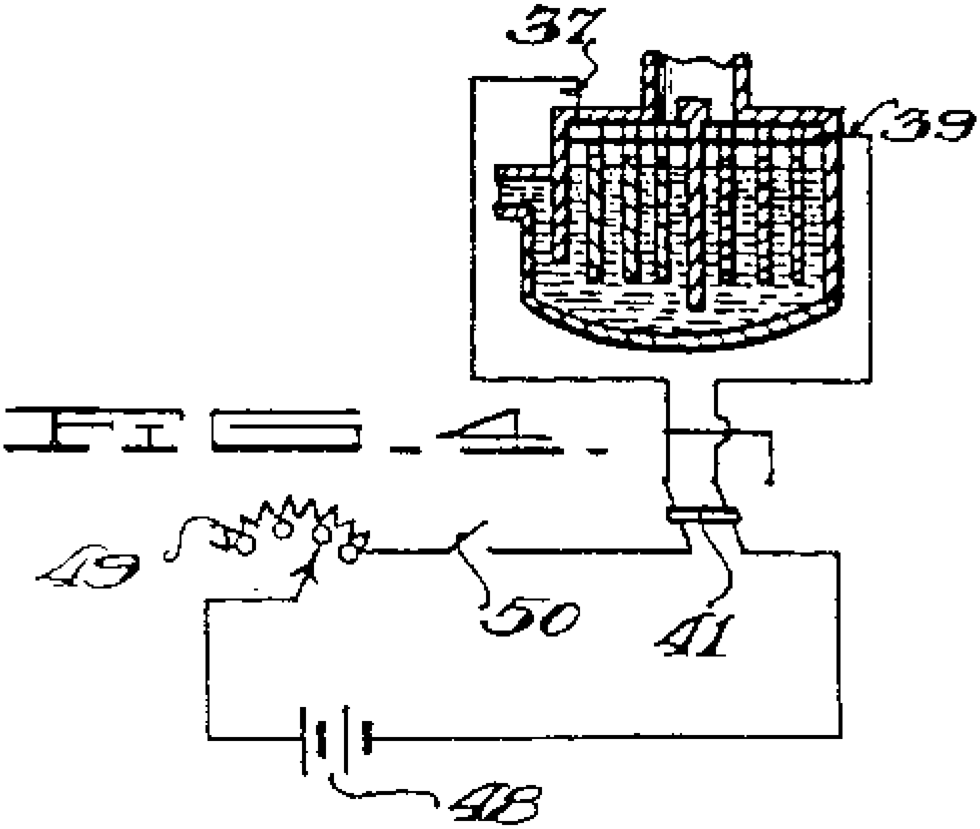

FIG. 4.

Continuing more in detail with the drawings, reference is primarily directed to Figure 1 in which the reference numeral 1designates the carburettor housing, which is preferably constructed of bakelite or other suitable insulating material. The housing 1 is so designed as to divide the carburettor into a float chamber 2 and gas generating chamber 4, connected by a fluid passage 3.

Water under pressure is forced into the carburettor through an opening 5 which communicates with the float chamber 2 through the medium of the sediment chamber 6 and the needle valve orifice 7, which is closed by a needle valve 8 when the device is not in operation. A float 9 surrounds the needle valve 8 and is free to move vertically relative thereto. Depending from the cover 10 to the float chamber 2 are two ears 11, located at spaced intervals on opposite sides of the needle valve 8. The members 12 are pivoted to the ears 11, as shown. The weighted outer ends of the members 12 rest on top of the float 9, and their inner ends are received in an annular groove in the collar 13 which is rigidly attached to the needle valve 8.

Within the gas generating chamber 4, a series of spaced, depending plates 14 are suspended from a horizontal member 15 to which a wire 16 has electrical contact through the medium of the bolt 17, which extends inwardly through the housing 1 and is threaded into the horizontal member 15.

A second series of plates 18 is located intermediate the plates 14 and attached to the horizontal member 19, and has electrical contact with the wire 20 through the bolt 21.

A gas passageway 22, in which a butterfly valve 23 is located, communicates with the gas generating chamber 4 through an orifice 24. An air inlet chamber 25 has communication with the gas passageway 22 above the orifice 24. A downwardly opening check valve 26 is in control of the openings 27, and is held in operatively closed by means of light spring 28.

An adjustable auxiliary air valve 29 is provided in the wall of the gas passageway 22, which air valve is closed by the butterfly valve 23 when the butterfly valve is closed, but communicates with the outside air when the butterfly valve is open.
The operation of the device is as follows :

The chambers 2 and 4 are first filled to the level 'a' with a solution of weak sulphuric acid or other electrolyte not changed by the passage of current there through, and the opening 5 is connected to a tank of water, not shown.

The wire 16 is next connected to the positive pole of a storage battery or other source of direct current and the wire 20 to the negative pole. Since the solution within the carburettor is a conductor of electricity, current will flow there through and hydrogen will be given off from the negative or cathode plates 18 and oxygen from the positive or anode plates 14.

The butterfly valve 23 is opened and the gas passageway 22 brought into communication with a partial vacuum. Atmospheric pressure acting on the top of the check valve 26 causes it to be forced downwardly as shown in dotted lines. The hydrogen and oxygen liberated from the water at the plates 18 and 14 are drawn upwardly through the orifice 24 covered by the check valve 30 where they are subsequently mixed with air entering through the openings 27 and through the auxiliary air valve 29.

When it is desired to reduce the flow of hydrogen and oxygen from the plates 18 and 14, the current flowing through the device is reduced, and when the current is interrupted the flow ceases. When the butterfly valve 23 is moved to closed position, the check valve 26 is automatically closed by the spring 28. Any excess given off during these operations is stored in the space above the fluid where it is ready for subsequent use.
Water is converted into its gaseous constituents by the device herein described, but the dilute sulphuric acid or other suitable electrolyte in the carburettor remains unchanged, since it is not destroyed by electrolysis, and the parts in contact therewith are made of bakelite and lead or other material not attacked by the electrolyte.

The structure shown in Figure 2 is substantially the same as that shown in Figure 1 with the exception that the modified structure embraces a larger gas generating chamber which is divided by means of an insulating plate 31and is further provided with a depending baffle plate 32 which separates the gas generating chamber 33 from the float chamber 34 in which the float 35 operates in the same manner as in Figure 1. Moreover, the structure shown in Figure 2 provides a series of spaced depending plates 36 which are electrically connected to the wire 37, and a second series of similar plates 38 which are electrically connected to the wire 39 and are spaced apart from the plates 36 by the insulating plate 31.

Gases generated on the surfaces of the plates 36 and 38 pass upward through the orifice 39a into the gas passageway 40 where they are mixed with air as explained in the description of Figure 1.

A pipe 51 bent as shown in Figure 2 passes downwardly through the housing of the carburettor and has a series of spaced apertures 'a' in its horizontal portion beneath the plates 36 and 38. An upwardly opening check valve 53 is in control of the air inlet 54. When a partial vacuum exists in the chamber 33, air is drawn in through the opening 54 and subsequently passes upwardly through the apertures 'a'. This air tends to remove any bubbles of gas collecting on the plates 36 and 38 and also tends to cool the electrolyte. The check valve 53 automatically closes when a gas pressure exists within the carburettor and thereby prevents the electrolyte from being forced out of the opening 54.

In order to provide for alternate evolution of the gases from the plates 36 and 38, a pole changer 41, shown in Figure 3 is provided, which is actuated periodically by the motor 42 which drives the worm 43 and the gear 44 and causes oscillations of the member 45 which is connected by a spring 46 to the arm 47, thereby causing the pole changer to snap from one position to the other.

In operation, the carburettor shown in Figure 2 is connected as shown in the wiring diagram of Figure 4. A storage battery 48 or other suitable source of direct current is connected to a variable rheostat 49, switch 50, pole changer 41 and to the carburettor as shown. Thus the rate of evolution of the gases can be controlled by the setting of the rheostat 49 and the desired alternate evolution of the gases in the compartments of the carburettor is accomplished by means of the periodically operated pole changer 41.

Manifestly, the construction shown is capable of considerable modification and such modification as is considered within the scope and meaning of the appended claims is also considered within the spirit and intent of the invention.

4.0.3.7. Horvath Stephen; US Patent #: 3,980,053; September 14, 1976

Fel Supply Apparatus for Internal Combustion Engines

A fuel supply apparatus generates hydrogen and oxygen by electrolysis of water. There is provided an electrolytic cell which has a circular anode surrounded by a cathode with a porous membrane there between. The anode is fluted and the cathode is slotted to provide anode and cathode areas of substantially equal surface area. A pulsed electrical current is provided between the anode and cathode for efficient generation of hydrogen and oxygen. The electrolytic cell is equipped with a float, which detects the level of electrolyte within the cell, and water is added to the cell as needed to replace the water lost through the electrolysis process. The hydrogen and oxygen are collected in chambers which are an integral part of the electrolytic cell, and these two gases are supplied to a mixing chamber where they are mixed in the ratio of two parts hydrogen to one part oxygen. This mixture of hydrogen and oxygen flows to another mixing chamber wherein it is mixed with air from the atmosphere. The system is disclosed as being installed in an automobile, and a dual control system, which is actuated by the automobile throttle, first meters the hydrogen and oxygen mixture into the chamber wherein it is combined with air and then meters the combined mixture into the automobile engine. The heat of combustion of a pure hydrogen and oxygen mixture is greater than that of a gasoline and air mixture of comparable volume, and air is therefore mixed with the hydrogen and oxygen to produce a composite mixture which has a heat of combustion approximating that of a normal gas-air mixture. This composite mixture of air, hydrogen and oxygen then can be supplied directly to a conventional internal combustion engine without overheating and without creation of a vacuum in the system.

BACKGROUND OF THE INVENTION

This invention relates to internal combustion engines. More particularly it is concerned with a fuel supply apparatus by means of which an internal combustion engine can be run on a fuel comprised of hydrogen and oxygen gases generated on demand by electrolysis of water.

In electrolysis a potential difference is applied between an anode and a cathode in contact with an electrolytic conductor to produce an electric current through the electrolytic conductor. Many molten salts and hydroxides are electrolytic conductors but usually the conductor is a solution of a substance which dissociates in the solution to form ions. The term "electrolyte" will be used herein to refer to a substance which dissociates into ions, at least to some extent, when dissolved in a suitable solvent. The resulting solution will be referred to as an "electrolyte solution".

Faraday's Laws of Electrolysis provide that in any electrolysis process the mass of substance liberated at an anode or cathode is in accordance with the formula $m = z q$ where m is the mass of substance liberated in grams, z is the electrochemical equivalent of the substance, and q is the quantity of electricity passed, in coulombs. An important consequence of Faraday's Laws is that the rate of decomposition of an electrolyte is dependent on current and is independent of voltage. For example, in a conventional electrolysis process in which a constant current I amps flows to t seconds, $q = It$ and the mass of material deposited or dissolved will depend on I regardless of voltage, provided that the voltage exceeds the minimum necessary for the electrolysis to proceed. For most electrolytes, the minimum voltage is very low.

There have been previous proposals to run internal combustion engines on a fuel comprised of hydrogen gas. Examples of such proposals are disclosed in U.S. Pat. Nos. 1,275,481, 2,183,674 and 3,471,274 and British specifications Nos., 353,570 and 364,179. It has further been proposed to derive the hydrogen from electrolysis of water, as exemplified by U.S. Pat. No. 1,380,183. However, none of the prior art constructions is capable of producing hydrogen at a rate such that it can be fed directly to internal combustion engines without intermediate storage. The present invention enables a fuel comprised of hydrogen and oxygen gases to be generated by electrolysis of water at such a rate that it can sustain operation of an internal combustion engine. It achieves this result by use of an improved electrolysis process of the type generally proposed in the parent application hereof.
As disclosed in my aforesaid parent application the prior art also shows electrolytic reactions employing DC or rectified AC which necessarily will have a ripple component; an example of the former being shown for instance in Kilgus' U.S. Pat. No. 2,016,442 and an example of the latter being shown in Emich, et al., U.S. Pat. No. 3,485,742. It will be noted that the Kilgus Patent also discloses the application of a magnetic field to his electrolyte, which field is said to increase the production of gas at the two electrodes.

SUMMARY OF THE INVENTION

The apparatus of the invention applies a pulsating current to an electrolytic solution of an electrolyte in water. Specifically, it enables high pulses of quite high current value and appropriately low voltage to be generated in the electrolyte solution by a direct input supply to produce a yield of electrolysis products such that these products may be fed directly to the internal combustion engine. The pulsating current generated by the apparatus of the present invention is to be distinguished from normal variations which occur in rectification of AC current and as hereinafter employed the term pulsed current will be taken to mean current having a duty cycle of less than 0.5.

It is a specific object of this invention to provide a fuel supply apparatus for an internal combustion engine by which hydrogen and oxygen gases generated by electrolysis of water are mixed together and fed directly to the internal combustion engine.

A still further object of the invention is to provide, for use with an internal combustion engine having inlet means to receive a combustible fuel, fuel supply apparatus comprising:

a vessel to hold an electrolyte solution of electrolyte dissolved in water; an anode and a cathode to contact the electrolyte solution within the vessel; electrical supply means to apply between said diode and said cathode pulses of electrical energy to induce a pulsating current in the electrolyte solution thereby to generate by electrolysis hydrogen gas at the cathode and oxygen gas at the anode; gas collection and delivery means to collect the hydrogen and oxygen gases and to direct them to the engine inlet means; and water admission means for admission of water to said vessel to make up loss due to electrolysis. In order that the invention may be more fully explained one particular example of an automobile internal combustion engine fitted with fuel supply apparatus in accordance with the invention will now be described in detail with reference to the accompanying drawings.

BRIEF DESCRIPTION OF THE DRAWINGS

FIG. 1 is a plan view of part of the automobile with its engine bay exposed to show the layout of the fuel supply apparatus and the manner in which it is connected to the automobile engine;

FIG-1

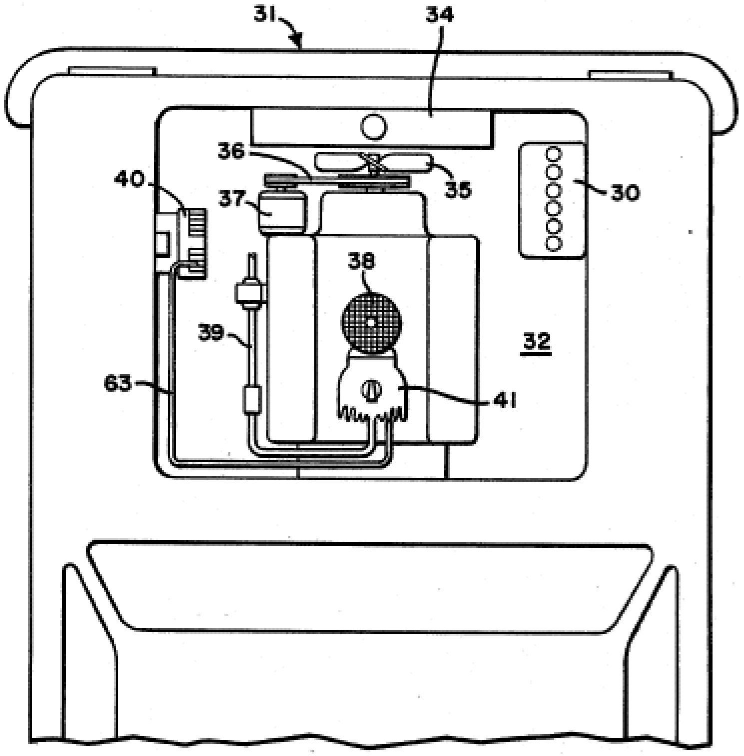

FIG. 2 is a circuit diagram of the fuel supply apparatus;

FIG-2

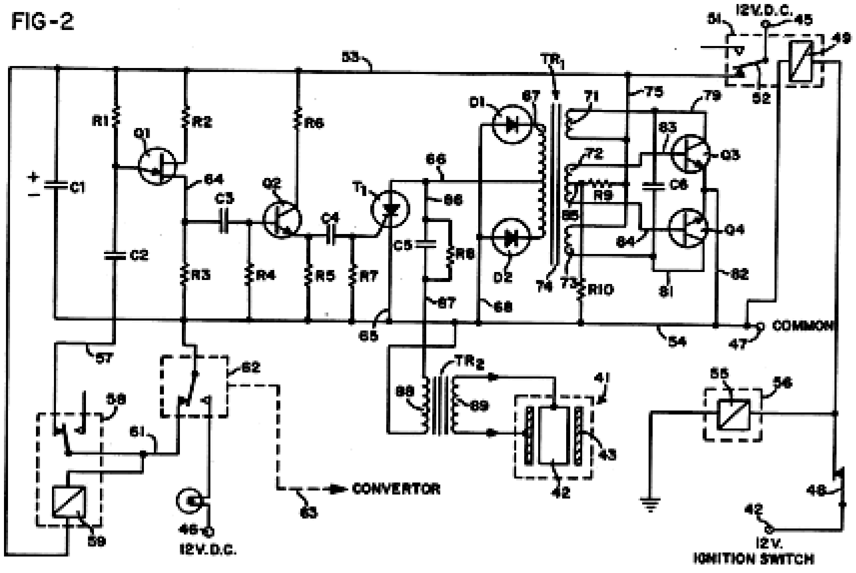

FIG. 3 is a plan view of a housing which carries electrical components of the fuel supply apparatus;

FIG-3

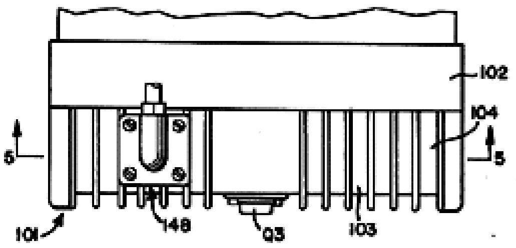

FIG. 4 is an elevation view of the housing shown in FIG. 3;

FIG-4

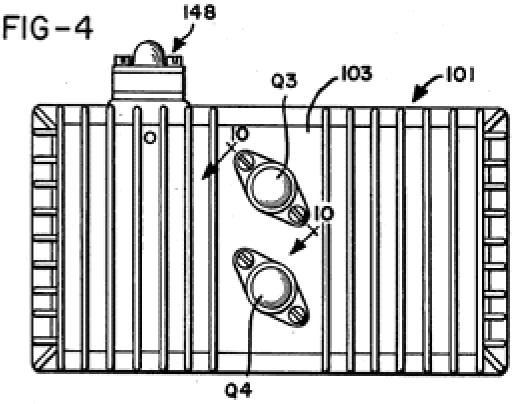

FIG. 5 is a cross-section on the line 5--5 in FIG. 3;

FIG-5

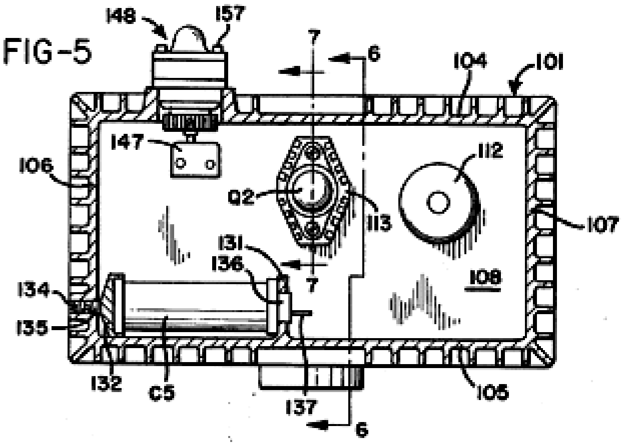

FIG. 6 is a cross-section on the line 6--6 in FIG. 5;

FIG. 7 is a cross-section on the line 7--7 in FIG. 5;

FIG-7

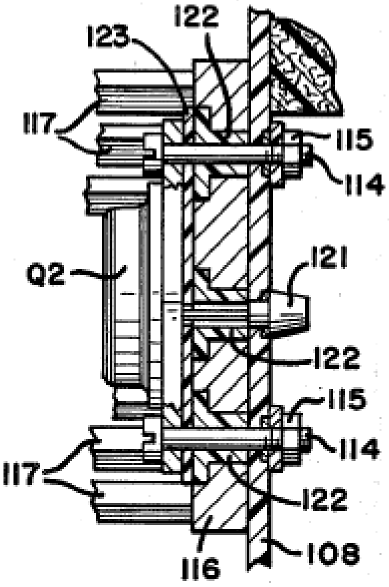

FIG. 8 is a perspective view of a diode heat sink included in the components illustrated in FIGS. 5 and 7;

FIG-8

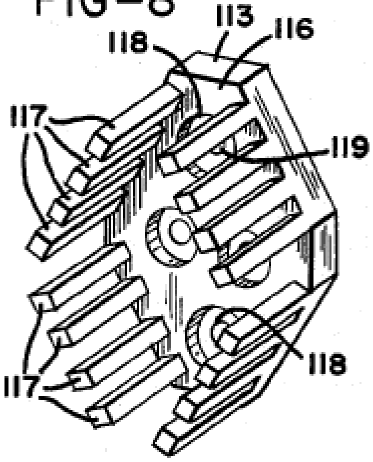

FIG. 9 illustrates a transformer coil assembly included in the electrical components mounted within the housing;

FIG-9

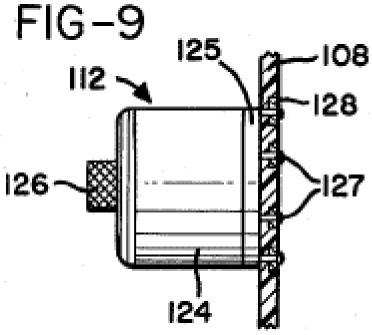

FIG. 10 is a cross-section on the line 10--10 in FIG. 4;

FIG-10

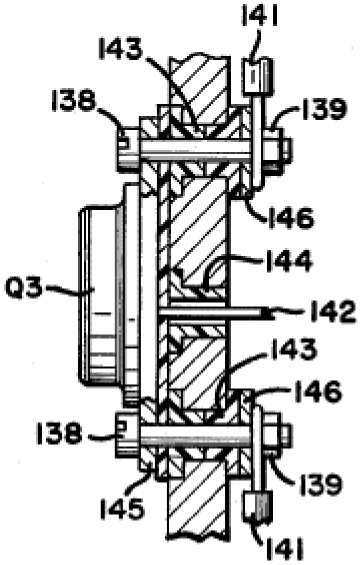

FIG. 11 is a cross-section on the line 11--11 in FIG. 5;

FIG-11

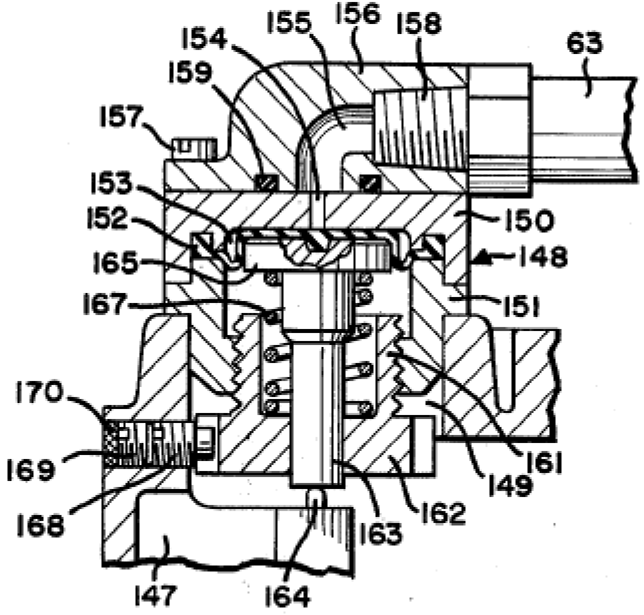

FIG. 12 is a cross-section through a terminal block mounted in the floor of the housing;

FIG-12

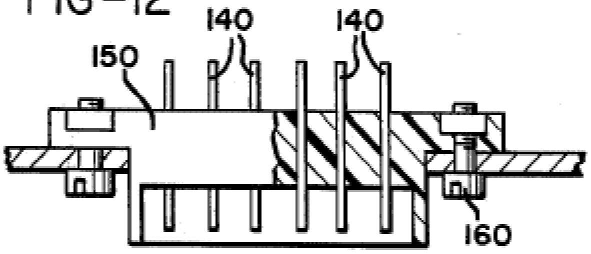

FIG. 13 is a plan view of an electrolytic cell incorporated in the fuel supply apparatus;

FIG-13

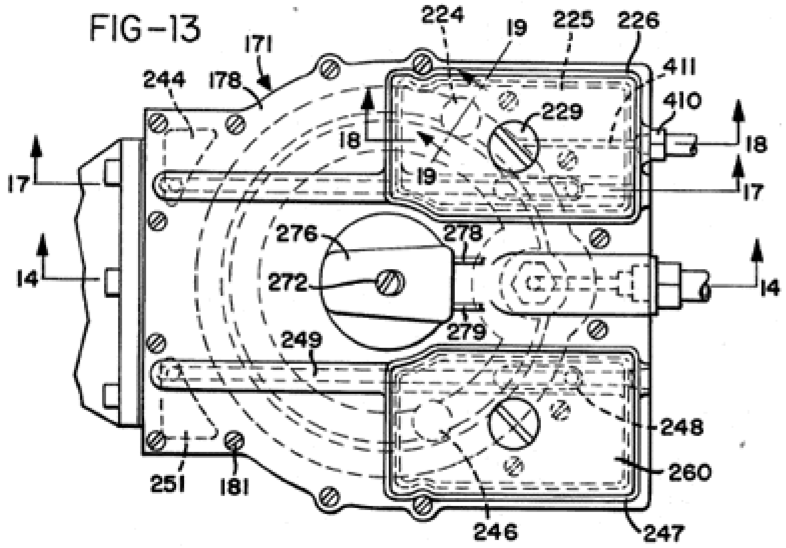

FIG. 14 is a cross-section on the line 14--14 in FIG. 13;

FIG. 15 is a cross-section generally on the line 15--15 in FIG. 14;

FIG. 16 is a cross-section on the line 16--16 in FIG. 14;

FIG. 17 is a cross-section on the line 17--17 in FIG. 13;

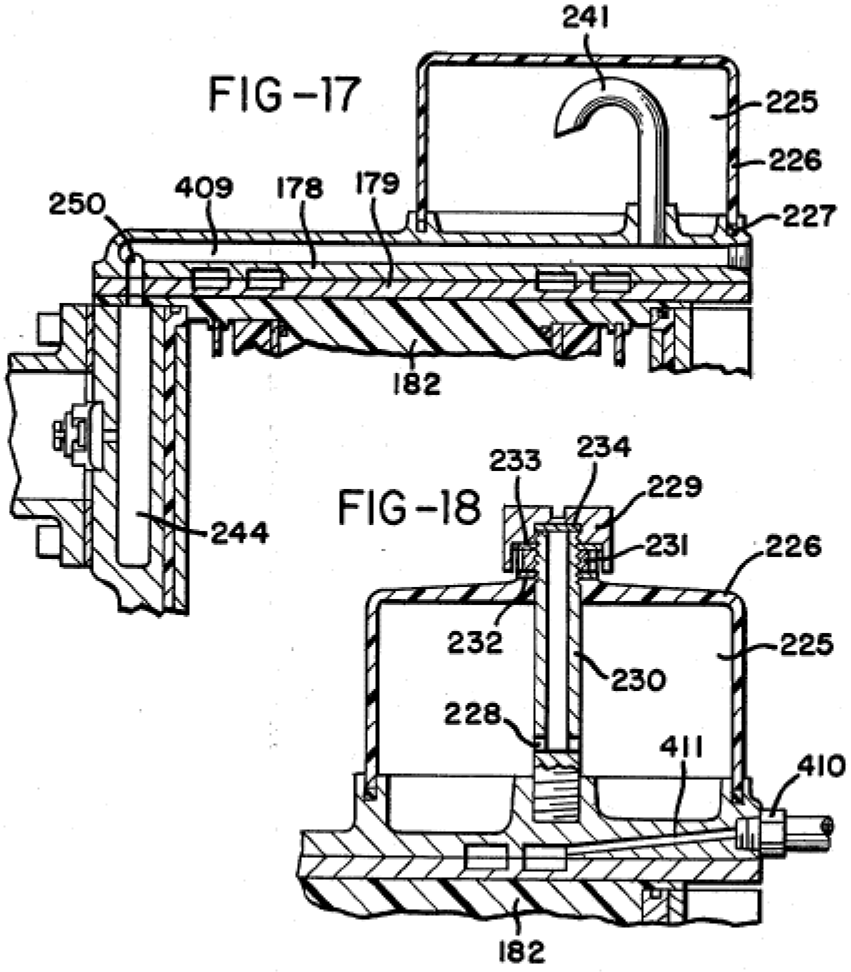
FIG-17

FIG-18

FIG. 18 is a cross-section on the line 18--18 of FIG. 13;
FIG. 19 is a vertical cross-section through a gas valve taken generally on line 19--19 in FIG. 13;
FIG. 20 is a perspective view of a membrane assembly disposed in the electrolytic cell;
FIG. 21 is a cross-section through part of the membrane assembly;
FIG. 22 is a perspective view of a float disposed in the electrolytic cell;
FIG. 23 is an enlargement of part of FIG. 14;
FIG. 24 is an enlarged cross-section on the line 24--24 in FIG. 16;
FIG. 25 is a perspective view of a water inlet valve member included in the components shown in FIG. 24;
FIG. 26 is a cross-section on line 26--26 in FIG. 16;
FIG. 27 is an exploded and partly broken view of a cathode and cathode collar fitted to the upper end of the cathode;
FIG. 28 is an enlarged cross-section showing some of the components of FIG. 15;
FIG. 29 is a perspective view of a valve cover member;
FIG. 30 shows a gas mixing and delivery unit of the apparatus generally in side elevation but with an air filter assembly included in the unit shown in section;
FIG. 31 is a vertical cross-section through the gas mixing and delivery unit with the air filter assembly removed;

FIG. 32 is a cross-section on the line 32--32 in FIG. 31;
FIG. 33 is a perspective view of a valve and jet nozzle assembly incorporated in the gas mixing and delivery unit;
FIG. 34 is a cross-section generally on the line 34--34 in FIG. 31;
FIG. 35 is a cross-section through a solenoid assembly;
FIG. 36 is a cross-section on the line 36--36 in FIG. 32; FIG. 32;
FIG. 37 is a rear elevation of part of the gas mixing and delivery unit;
FIG. 38 is a cross-section on the line 38--38 in FIG. 34;
FIG. 39 is a plan view of the lower section of the gas mixing and delivery unit, which is broken away from the upper section along the interface 39--39 of FIG. 30;
FIG. 40 is a cross-section on the line 40--40 in FIG. 32; and
FIG. 41 is a plan of a lower body part of the gas mixing and delivery unit.

DESCRIPTION OF THE PREFERRED EMBODIMENT

FIG. 1 shows an assembly denoted generally as 31 having an engine bay 32 in which an internal combustion engine 33 is mounted behind a radiator 34. Engine 33 is a conventional engine and, as illustrated, it may have two banks of cylinders in "V" formation. Specifically, it may be a V8 engine. It is generally of conventional construction and FIG. 1 shows the usual cooling fan 34, fan belt 36 and generator or alternator 37.

In accordance with the invention the engine does not run on the usual petroleum fuel but is equipped with fuel supply apparatus which supplies it with a mixture of hydrogen and oxygen gases generated as products of a water electrolysis process carried out in the fuel supply apparatus. The major components of the fuel supply apparatus are an electrolytic cell denoted generally as 41 and a gas mixing and delivery unit 38 to mix the hydrogen and oxygen gases generated within the cell 41 and to deliver them to engine 33. The electrolytic cell 41 receives water through a water delivery line 39 to make up the electrolyte solution within it. It has an anode and a cathode which contact the electrolyte solution, and in operation of the apparatus pulses of electrical energy are applied between the anode and cathode to produce pulses of high current flow through the electrolyte solution. Some of the electrical components necessary to produce the pulses of electrical energy applied between the anode and cathode are carried in a housing 40 mounted on one side of engine bay 32. The automobile battery 30 is mounted at the other side of the engine bay.

Before the physical construction of the fuel delivery apparatus is described in detail the general principles of its operation will firstly be described with reference to the electrical circuit diagram of FIG. 2.

In the illustrated circuit terminals 44, 45, 46 are all connected to the positive terminal of the automobile battery 30 and terminal 47 is connected to the negative terminal of that battery. Switch 48 is the usual ignition switch of the automobile and closure of this switch provides current to the coil 49 of a relay 51. The moving contact 52 of relay 51 receives current at 12 volts from terminal 45, and when the relay is operated by closure of ignition switch 48 current is supplied through this contact to line 53 so that line 53 may be considered as receiving a positive input and line 54 from terminal 47 may be considered as a common negative for the circuit. Closure of ignition switch 48 also supplies current to one side of the coil 55 of a solenoid

56. The other side of solenoid coil 55 is earthed by a connection to the automobile body within the engine bay. As will be explained below solenoid 56 must be energized to open a valve which controls supply of hydrogen and oxygen gases to the engine and the valve closes to cut off that supply as soon as ignition switch 48 is opened.

The function of relay 51 is to connect circuit line 53 directly to the positive terminal of the automobile battery so that it receives a positive signal directly rather than through the ignition switch and wiring.

The circuit comprises pulse generator circuitry which includes unijunction transistor Q1 with associated resistors R1, R2 and R3 and capacitors C2 and C3. This circuitry produces pulses which are used to trigger an NPN silicon power transistor Q2 which in turn provides via a capacitor C4 triggering pulses for a thyristor T1.

Resistor R1 and capacitor C2 are connected in series in a line 57 extending to one of the fixed contacts of a relay 58. The coil 59 of relay 58 is connected between line 53 and a line 61 which extends from the moving contact of the relay to the common negative line 54 via a normally closed pressure operated switch 62. The pressure control line 63 of switch 62 is connected in a manner to be described below to a gas collection chamber of electrolytic cell 41 in order to provide a control connection whereby switch 62 is opened when the gas in the collection chamber reaches a certain pressure. However, provided that switch 62 remains closed, relay 58 will operate when ignition switch 48 is closed to provide a connection between lines 57 and 61 thereby to connect capacitor C2 to the common negative line 54. The main purpose of relay 58 is to provide a slight delay in this connection between the capacitor C2 and the common negative line 54 when the circuit is first energized. This will delay the generation of triggering pulses to thyristor T1 until a required electrical condition has been achieved in the transformer circuitry to be described below. Relay 58 is hermetically sealed and has a balanced armature so that it can operate in any position and can withstand substantial shock or vibration when the automobile is in use.

When the connection between capacitor C2 and line 54 is made via relay 58, unijunction transistor Q1 will act as an oscillator to provide positive output pulses in line 64 at a pulse rate which is controlled by the ratio of R1:C1 and at a pulse strength determined by the ratio of R2:R3. These pulses will charge the capacitor C3. Electrolytic capacitor C1 is connected directly between the common positive line 53 and the common negative line 54 to filter the circuitry from all static noise.

Resistor R1 and capacitor C2 are chosen such that at the input to transistor Q1 the pulses will be of saw tooth form. This will control the form of the pulses generated in the subsequent circuitry and the saw tooth pulse form is chosen since it is believed that it produces the most satisfactory operation of the pulsing circuitry. It should be stressed, however, that other pulse forms, such as square wave pulses, could be used. Capacitor C3 discharges through a resistor R4 to provide triggering signals for transistor Q2. Resistor R4 is connected to the common negative line 54 to serve as a gate current limiting device for transistor Q2.

The triggering signals produced by transistor Q2 via the network of capacitor C3 and a resistor R4 will be in the form of positive pulses of sharply spiked form. The collector of transistor Q2 is connected to the positive supply line 53 through resistor R6 while the emitter of that transistor is connected to the common negative line 54 through resistor R5. These resistors R5 and R6 control the strength of current pulses applied to a capacitor C4, which discharges through a resistor R7 to the common negative line 54, thereby to apply triggering signals to the gate of thyristor T1. The gate of thyristor T1 receives a negative bias from the common negative line via resistor R7 which thus serves to prevent triggering of the thyristor by inrush currents.

The triggering pulses applied to the gate of thyristor T1 will be very sharp spikes occurring at the same frequency as the saw tooth wave form pulses established by unijunction transistor Q1. It is preferred that this frequency be of the order of 10,000 pulses per minute and details of specific circuit components which will achieve this result are listed below. Transistor Q2 serves as an interface between unijunction transistor Q1 and thyristor T1, preventing back flow of emf from the gate of the thyristor which might otherwise interfere with the operation of transistor Q1. Because of the high voltages being handled by the thyristor and the high back emf applied to transistor Q2, the latter transistor must be mounted on a heat sink.

The cathode of thyristor T1 is connected via a line 65 to the common negative line 54 and the anode is connected via a line 66 to the centre of the secondary coil 67 of a first stage transformer TR1. The two ends of transformer coil 67 are connected via diodes D1 and D2 and a line 68 to the common negative line 54 to provide full wave rectification of the transformer output.

First stage transformer T1 has three primary coils 71, 72, 73 wound together with secondary coil 67 about a core 74. This transformer may be of conventional half cup construction with a ferrite core. The secondary coil may be wound on to a coil former disposed about the core and primary coils 71 and 73 may be wound in bifilar fashion over the secondary coil. The other primary coil 72 may then be wound over the coils 71, 73. Primary coils 71 and 73 are connected at one side by a line 75 to the uniform positive potential of circuit line 53 and at their other sides by lines 79, 81 to the collectors of transistors Q3, Q4. The emitters of transistors Q3, Q4 are connected permanently via a line 82 to the common negative line 54. A capacitor C6 is connected between lines 79, 81 to act as a filter preventing any potential difference between the collectors of transistors Q3, Q4.

The two ends of primary coil 72 are connected by lines 83, 84 to the bases of transistors Q3, Q4. This coil is centre tapped by a line 85 connected via resistor R9 to the positive line 53 and via resistor R10 to the common negative line 54.

When power is first applied to the circuit transistors Q3 and Q4 will be in their non-conducting states and there will be no current in primary coils 71, 73. However, the positive current in line 53 will provide via resistor R9 a triggering signal applied to the centre tap of coil 72 and this signal operates to trigger alternate high frequency oscillation of transistors Q3, Q4 which will result in rapid alternating pulses in primary coils 71, 73. The triggering signal applied to the centre tap of coil 72 is controlled by the resistor network provided by resistors R9 and R10 such that its magnitude is not sufficient to enable it to trigger Q3 and Q4 simultaneously but is sufficient to trigger one of those transistors. Therefore only one of the transistors is fired by the initial triggering signal to cause a current to flow through the respective primary coil 71 or 73. The signal required to hold the transistor in the conducting state is much less than that required to trigger it initially, so that when the transistor becomes conductive some of the signal applied to the centre tap of coil 72 will be diverted to the non-conducting transistor to trigger it. When the second transistor is thus fired to become conductive, current will flow through the other of the primary coils 71, 73, and since the emitters of the two transistors are directly connected together, the positive output of the second transistor will cause the first-fired transistor to be shut off. When the current drawn by the collector of the second-fired resistor drops, part of the signal on the centre tap of coil 72 is diverted back to the collector of the first transistor which is re-fired. It will be seen that the cycle will then repeat indefinitely so that transistors Q3, Q4 are alternately fired and shut off in very rapid sequence. Thus current pulses flow in alternate sequence through primary coils 71, 73 at a very high frequency, this frequency being constant and independent of changes in input voltage to the circuit. The rapidly alternating pulses in primary coils 71 and 73, which will continue for so long as ignition switch 48 remains closed, will generate higher voltage signals at the same frequency in the transformer secondary coil 67.

A dump capacitor C5 bridged by a resistor R8 is connected by a line 86 to the line 66 from the secondary coil of transformer TR1 and provides the output from that transformer which is fed via line 87 to a second stage transformer TR2.

When thyristor T1 is triggered to become conductive the full charge of dump capacitor C5 is released to second stage transformer TR2. At the same time the first stage of transformer TR1 ceases to function because of this momentary short circuit placed across it and consequently thyristor T1 releases, i.e. becomes non-conductive. This permits charge to be built up again in dump capacitor C5 for release when the thyristor is next triggered by a signal from transistor Q2. Thus during each of the intervals when the thyristor is in its non-conducting state the rapidly alternating pulses in primary coils 71, 73 of transformer TR1 produced by the continuously oscillating transistors Q3, Q4 produce, via the transformer coupling, relatively high voltage output pulses which build up a high charge in capacitor C5, and this charge is released suddenly when the thyristor is triggered. In a typical apparatus using a 12 volt DC supply battery pulses of the order of 22 amps at 300 volts may be produced in line 87.

As previously mentioned relay 58 is provided in the circuit to provide a delay in the connection of capacitor C2 to the common negative line 54. This delay, although very short, is sufficient to enable transistors Q3, Q4 to start oscillating to cause transformer TR1 to build up a charge in dumping capacitor C5 before the first triggering signal is applied to thyristor T1 to cause discharge of the capacitor.

Transformer TR2 is a step-down transformer which produces pulses of very high current flow at low voltage. It is built into the anode of electrolytic cell 41 and comprises a primary coil 88 and a secondary coil 89 wound about a core 91. Secondary coil 89 is formed of heavy wire in order to handle the large current induced in it and its ends are connected directly to the anode 42 and cathode 43 of the electrolytic cell 41 in a manner to be described below.

In a typical apparatus, the output from the first stage transformer TR1 would be 300 volt pulses of the order of 22 amps at 10,000 pulses per minute and a duty cycle of slightly less than 0.006. This can be achieved from a uniform 12 volt and 40 amps DC supply using the following circuit components:

R1 2.7 k ohms ½ watt 2% resistor
R2 220 ohms 1/2 watt 2% resistor
R3 100 ohms 1/2 watt 2% resistor
R4 22 k ohms 1/2 watt 2% resistor
R5 100 ohms 1/2 watt 2% resistor
R6 220 ohms 1/2 watt 2% resistor
R7 1 k ohms 1/2 watt 2% resistor
R8 10 m ohms 1 watt 5% resistor
R9 100 ohms 5 watt 10% resistor
R10 5.6 ohms 1 watt 5% resistor
C1 2200 mf 16v electrolytic capacitor
C2 2.2 mf 100v 10% capacitor
C3 2.2 mf 100v 10% capacitor
C4 1 mf 100v 10% capacitor
C5 1 mf 1000v ducon paper capacitor 5S10A
C6 0.002 mf 160v capacitor
Q1 2n 2647 pn unijunction transistor
Q2 2N 3055 NPN silicon power transistor
Q3 2n 3055 npn silicon power transistor
Q4 2n 3055 npn silicon power transistor
T1 btw 30-800 rm fast turn-off thyristor
D1 a 14 p diode
D2 a 14 p diode
L1 indicator lamp
Sv1 continuously rated solenoid
Rl1 pw5ls hermetically sealed relay
Ps1 p658a-10051 pressure operated micro switch
Tr1 half cup transformer cores 36/22-341
Coil former 4322-021-30390 wound to provide a turns ratio between secondary and primary of 18:1
Secondary coil 67 = 380 turns
Primary coil 71 = 9 turns
Primary coil 73 = 9 turns
Primary coil 72 = 4 turns

The installation of the above circuit components is illustrated in FIGS. 3 to 13. They are mounted within and on a housing which is denoted generally as 101 and which is fastened to a side wall of the automobile engine bay 32 via a mounting bracket 102. Housing 101, which may be formed as an aluminium casting, has a front wall 103, top and bottom walls 104, 105 and side walls 106, 107. All of these walls have external cooling fins. The back of housing 101 is closed by a printed circuit board 108 which is held clamped in position by a peripheral frame 109 formed of an insulated plastics material clamped between the circuit board and mounting bracket 102. An insulating sheet 111 of cork is held between the frame 109 and mounting bracket 102.

Printed circuit board 108 carries all of the above-listed circuit components except for capacitor C5 and transistors Q3 and Q4. FIG. 5 illustrates the position in which transistor Q2 and the coil assembly 112 of transformer TR1 are mounted on the printed circuit board. Transistor Q2 must withstand considerable heat generation and it is therefore mounted on a specially designed heat sink 113 clamped to circuit board 108 by clamping screws 114 and nuts 115. As most clearly illustrated in FIGS. 7 and 8, heat sink 113 has a flat base plate portion 116 which is generally diamond shaped and a series of rod like cooling fins 117 project to one side of the base plate around its periphery. It has a pair of countersunk holes 118 of the clamping screws and a similar pair of holes 119 to receive the connector pins 121 which connect transistor Q2 to the printed circuit board. Holes 118, 119 are lined with nylon bushes 122 and a formica sheet 123 is fitted between the transistor and the heat sink so that the sink is electrically insulated from the transistor.

The coil assembly 112 of transformer TR1 (See FIG. 9) is comprised of a casing 124 which contains transformer coils and the associated core and former and is closed by a plastic closing plate 125. Plate 125 is held in position by a clamping stud 126 and is fitted with electrical connector pins 127 which are simply pushed through holes in circuit board 108 and are soldered to appropriate copper conductor strips 128 on the outer face of the board.

For clarity the other circuit components mounted on printed circuit board 108 are not illustrated in the drawings. These are standard small size components and the manner in which they may be fitted to the circuit board is entirely conventional.

Capacitor C5 is mounted within casing 101. More specifically it is clamped in position between a flange 131 which stands up from the floor 105 of the casing and a clamping pad 132 engaged by a clamping screw 133, which is mounted in a threaded hole in casing side wall 106 and is set in position by a lock screw 134. Flange 131 has two holes 135 (See FIG. 6) in which the terminal bosses 136 of capacitor C5 are located. The terminal pins 137 projecting from bosses 136 are connected to the terminal board 108 by wires (not shown) and appropriate connector pins which are extended through holes in the circuit board and soldered to the appropriate conductor strips on the other face of that board.

Transistors Q3 and Q4 are mounted on the front wall 103 of casing 101 so that the finned casing serves as an extended heat sink for these two transistors. transistors. They are mounted on the casing wall and electrically connected to the printed circuit board in identical fashion and this is illustrated by FIG. 10 which shows the mounting of transistor Q3. As shown in that figure the transistor is clamped in position by clamping screws 138 and nuts 139 which also serve to provide electrical connections to the appropriate conductors of the printed circuit board via conductor wires 141. The third connection from the emitter of the transistor to the common negative conductor of the printed circuit is made by conductor 142. Screws 130 and conductor 142 extend through three holes in the casing front wall 103 and these holes are lined with electrically insulating nylon bushes 143, 144. A formica sheet 145 is sandwiched between casing plate 103 and the transistor which is therefore electrically insulated from the casing. Two washers 146 are placed beneath the ends of conductor wires 141.

Pressure operated micro switch 52 is mounted on a bracket 147 projecting inwardly from front wall 103 of casing 101 adjacent the top wall 104 of the casing and the pressure sensing unit 148 for this switch is installed in an opening 149 through top wall 104. As most clearly seen in FIG. 11, pressure sensing unit 148 is comprised of two generally cylindrical body members 150, 151 between which a flexible diaphragm 152 is clamped to provide a diaphragm chamber 153. The gas pressure of sensing tube 63 is applied to chamber 153 via a small diameter passage 154 in body member 150 and a larger passage 155 in a cap member 156. The cap member and body members are fastened together and clamped to the casing top plate 104 by means of clamping screws 157. Sensing tube 63 is connected to the passage 155 in cap member 156 by a tapered thread connector 158 and the interface between cap member 156 and body member 150 is sealed by an O-ring 159.

The lower end of body member 151 of pressure sensing unit 148 has an internally screw threaded opening which receives a screw 161 which at its lower end is formed as an externally toothed adjusting wheel 162. A switch actuating plunger 163 extends through a central bore in adjusting wheel 162 so that it engages at one end flexible diaphragm 152 and at the other end the actuator member 164 of micro switch 62. The end of plunger 163 which engages the diaphragm has a flange 165 to serve as a pressure pad and a helical compression spring 167 encircles plunger 163 to act between flange 165 and the adjusting wheel 162 to bias the plunger upwardly against the action of the gas pressure acting on diaphragm 152 in chamber 153. The pressure at which diaphragm 152 will force plunger 163 downwardly against the action of spring 167 to cause actuation of switch 62 may be varied by rotating screw 161 and the setting of this screw may be held by a setting screw 168 mounted in a threaded hole in the upper part of casing front wall 103 and projecting inwardly to fit between successive teeth of adjusting wheel 162. After correct setting of screw 161 is achieved set screw 168 will be locked in position by locking screw 169 which is then sealed by a permanent seal 170 to prevent tampering. Micro switch 62 is also electrically connected to the appropriate conductors of the printed circuit board via wires within the housing and connector pins.

Electrical connections are made between the conductors of printed circuit board 108 and the internal wiring of the circuit via a terminal block 150 (FIG. 12) set in an opening of housing floor 105 by screws 160 and fitted with terminal plates 140.

The physical construction of electrolytic cell 41 and the second stage transformer TR2 is illustrated in FIGS. 13 to 29. The cell comprises an outer casing 171 having a tubular peripheral wall 172 and top and bottom closures 173, 174. Bottom closure 174 is comprised of a domed cover 175 and an electrically insulated disc 176 which are held to the bottom of peripheral wall 172 by circumferentially spaced clamping studs 177. Top closure 173 is comprised of a pair of top plates 178, 179 disposed face to face and held by circumferentially spaced clamping studs 181 screwed into tapped holes in the upper end of peripheral wall 172. The peripheral wall of the casing is provided with cooling fins 180.

The anode 42 of the cell is of generally tubular formation. It is disposed vertically within the outer casing and is clamped between upper and lower insulators 182, 183. Upper insulator 182 has a central boss portion 184 and an annular peripheral flange 185 portion the outer rim of which is clamped between upper closure plate 179 and the upper end of peripheral wall 172. Lower insulator 183 has a central boss portion 186, an annular flange portion 187 surrounding the boss portion and an outer tubular portion 188 standing up from the outer margin of flange portion 187. Insulators 182, 183 are moulded from an electrically insulating material which is also alkali resistant. Polytetrafluoroethylene is one suitable material.

When held together by the upper and lower closures, insulators 182, 183 form an enclosure within which anode 42 and the second stage transformer TR2 are disposed. Anode 42 is of generally tubular formation and it is simply clamped between insulators 182, 183 with its cylindrical inner periphery located on the boss portions 184, 186 of those insulators. It forms a transformer chamber which is closed by the boss portions of the two insulators and which is filled with a suitable transformer oil. O-ring seals 190 are fitted between the central bosses of the insulator plates and the anode to prevent loss of oil from the transformer chamber.

The transformer core 91 is formed as a laminated mild steel bar of square section. It extends vertically between the insulator boss portions 184, 186 and its ends are located within recesses in those boss portions. The primary transformer winding 88 is wound on a first tubular former 401 fitted directly onto core 91 whereas the secondary winding 89 is wound on a second tubular former 402 so as to be spaced outwardly from the primary winding within the oil filled transformer chamber.

The cathode 43 in the form of a longitudinally slotted tube which is embedded in the peripheral wall portion 183, this being achieved by moulding the insulator around the cathode. The cathode has eight equally spaced longitudinal slots 191 so that it is essentially comprised of eight cathode strips 192 disposed between the slots and connected together at top and bottom only, the slots being filled with the insulating material of insulator 183.

Both the anode and cathode are made of nickel plated mild steel. The outer periphery of the anode is machined to form eight circumferentially spaced flutes 193 which have arcuate roots meeting at sharp crests or ridges 194 defined between the flutes. The eight anode crests 194 are radially aligned centrally of the cathode strips 192 and the perimeter of the anode measured along its external surface is equal to the combined widths of the cathode strips measured at the internal surfaces of these strips, so that over the major part of their lengths the anode and cathode have equal effective areas. This equalization of areas generally have not been available in prior art cylindrical anode/cathode arrangements.

As most clearly seen in FIG. 27 the upper end of anode 42 is relieved and fitted with an annular collar 200 the outer periphery of which is shaped to form an extension of the outer peripheral surface of the fluted anode. This collar is formed of an electrically insulated plastics material such as polyvinyl chloride or Teflon. A locating pin 205 extends through collar 200 to project upwardly into an opening in upper insulating plate 182 and to extend downwardly into a hole 210 in the cathode. The collar is thus located in correct annular alignment relative to the anode and the anode is correctly aligned relative to the cathode.

The annular space 195 between the anode and cathode serves as the electrolyte solution chamber. Initially this chamber is filled approximately 75% full with an electrolyte solution of 25% potassium hydroxide in distilled water. As the electrolysis reaction progresses hydrogen and oxygen gases collect in the upper part of this chamber and water is admitted to maintain the level of electrolyte solution in the chamber. Insulating collar 200 shields the cathode in the upper region of the chamber where hydrogen and oxygen gases collect to prevent any possibility of arcing through these gases between the anode and cathode.

Electrolyte chamber 195 is divided by a tubular membrane 196 formed by nylon woven mesh material 408 stretched over a tubular former 197 formed of very thin sheet steel. As most clearly illustrated in FIGS. 20 and 21 former 197 has upper and lower rim portions 198, 199 connected by circumferentially spaced strip portions 201. The nylon mesh material 408 may be simply folded around the upper and lower insulators 182, 183 so that the former is electrically isolated from all other components of the cell. Material 408 has a mesh size which is so small that the mesh openings will not pass bubbles of greater than 0.004 inch diameter and the material can therefore serve as a barrier against mixing of hydrogen and oxygen generated at the cathode and anode respectively while permitting the electrolytic flow of current between the electrodes. The upper rim portion 198 of the membrane former 197 is deep enough to constitute a solid barrier through the depth of the gas collection chamber above the electrolyte solution level so that there will be no mixing of hydrogen and oxygen within the upper part of the chamber.

Fresh water is admitted into the outer section of chamber 195 via an inlet nozzle 211 formed in upper closure plate 178. The electrolyte solution passes from the outer to the inner sections of chamber 195 through the mesh membrane 408.

Nozzle 211 has a flow passage 212 extending to an electrolyte inlet valve 213 controlled by a float 214 in chamber 195. Valve 213 comprises a bushing 215 mounted within an opening extending downwardly through upper closure plate 179 and the peripheral flange 185 of upper insulator 182 and providing a valve seat which cooperates with valve needle 216. Needle 216 rests on a pad 217 on the upper end of float 214 so that when the electrolyte solution is at the required level the float lifts the needle hard against the valve seat. The float slides vertically on a pair of square section slide rods 218 extending between the upper and lower insulators 182 and 183. These rods, which may be formed of polytetrafluoroethylene extend through appropriate holes 107 through the float.

The depth of float 214 is chosen such that the electrolyte solution fills only approximately 75% of the chamber 195, leaving the upper part of the chamber as a gas space which can accommodate expansion of the generated gas due to heating within the cell.

As electrolysis of the electrolyte solution within chamber 195 proceeds, hydrogen gas is produced at the cathode and oxygen gas is produced at the anode. These gases bubble upwardly into the upper part of chamber 195 where they remain separated in the inner and outer compartments defined by membrane and it should be noted that the electrolyte solution enters that part of the chamber which is filled with oxygen rather than hydrogen so there is no chance of leakage of hydrogen back through the electrolyte inlet nozzle.

The abutting faces of upper closure plates 178, 179 have matching annular grooves forming within the upper closure inner and outer gas collection passages 221, 222. Outer passage 222 is circular and it communicates with the hydrogen compartment of chamber 195 via eight ports 223 extending downwardly through top closure plate 179 and the peripheral flange of upper insulator 182 adjacent the cathode strips 192. Hydrogen gas flows upwardly through ports 223 into passage 222 and thence upwardly through a one-way valve 224 (FIG. 19) into a reservoir 225 provided by a plastic housing 226 bolted to top closure plate 178 via a centre stud 229 and sealed by a gasket 227. The lower part of housing 114 is charged with water. Stud 229 is hollow and its lower end has a transverse port 228 so that, on removal of a sealing cap 229 from its upper end it can be used as a filter down which to pour water into the reservoir 225. Cap 229 fits over a nut 231 which provides the clamping action on plastic housing 226 and resilient gaskets 232, 233 and 234 are fitted between the nut and cover, between the cap and the nut and between the cap and the upper end of stud 229.

One-way valve 224 comprises a bushing 236 which projects downwardly into the annular hydrogen passage 221 and has a valve head member 237 screw fitted to its upper end to provide clamping action on top closure plate 178 between the head member and a flange 238 at the bottom end bushing 236. Bushing 236 has a central bore 239, the upper end of which receives the diamond cross-section stem of a valve member 240, which also comprises a valve plate portion 242 biased against the upper end of the bushing by compression spring 243. Valve member 240 is lifted against the action of spring 243 by the pressure of hydrogen gas within passage 221 to allow the gas to pass into the interior of valve head 237 and then out through ports 220 in that member into reservoir 225.

Hydrogen is withdrawn from reservoir 225 via a stainless- steel crooked tube 241 which connects with a passage 409. Passage 409 extends to a port 250 which extends downwardly through the top and bottom closure plates 178, 179 and top insulator 182 into a hydrogen duct 244 extending vertically within the casting of casing 171. Duct 244 is of triangular cross-section. As will be explained below, the hydrogen passes from this duct into a mixing chamber defined in the gas mixing and delivery unit 38 which is bolted to casing 171.

Oxygen is withdrawn from chamber 195 via the inner annular passage 221 in the top closure. Passage 221 is not circular but has a scalloped configuration to extend around the water inlet. Oxygen enters it through eight ports 245 extended through top closure plate 179 and the annular flange portion of upper insulator 182. The oxygen flows upwardly from passage 222 through a one-way valve 246 and into a reservoir 260 provided by a plastic housing 247. The arrangement is similar to that for withdrawal of hydrogen and will not be described in great detail. Suffice to say that the bottom of the chamber is charged with water and the oxygen is withdrawn through a crooked tube 248, an outlet passage 249 in top closure plate 178, and a port which extends downwardly through closure plates 178, 179 and top insulator 182 into a triangular cross-section oxygen duct 251 extending vertically within casing 171 disposed opposite hydrogen duct 244. The oxygen is also delivered to the gas mixing chamber of the mixing and delivery unit 38.

The pressure sensing tube 63 for switch 62 is connected via a tapered thread connector 410 and a passage 411 in the top closure plate 178 directly to the annular hydrogen passage 222. If the pressure within the passage rises above a predetermined level, switch 62 is operated to disconnect capacitor C2 from the common negative line 54. This removes the negative signal from capacitor C2 which is necessary to maintain continuous operation of the pulse generating circuitry for generating the triggering pulses on thyristor T1 and these triggering pulses therefore cease. The transformer TR1 continues to remain in operation to charge dumping capacitor C5 but because thyristor T1 cannot be triggered dumping capacitor C5 will simply remain charged until the hydrogen pressure in passage 222, and therefore in chamber 195 falls below the predetermined level and triggering pulses are applied once more to thyristor T1. Pressure actuated switch 62 thus controls the rate of gas production according to the rate at which it is withdrawn. The stiffness of the control springs for gas escape valves 224, 246 must of course be chosen to allow escape of the hydrogen and oxygen in the proportions in which they are produced by electrolysis, i.e. in the ratios 2:1 by volume.

Reservoirs 225, 260 are provided as a safety precaution. If a sudden back pressure were developed in the delivery pipes this could only shatter the plastic housings 226, 247 and could not be transmitted back into the electrolytic cell. Switch 62 would then operate to stop further generation of gases within the cell.

The electrical connections of secondary transformer coil 89 to the anode and the cathode are shown in FIG. 14. One end of coil 89 is extended as a wire 252 which extends into a blind hole in the inner face of the anode where it is gripped by a grub screw 253 screwed into a threaded hole extended vertically into the anode underneath collar 200. A tapered nylon plug 254 is fitted above screw 253 to seal against loss of oil from the interior of the anode. The other end of coil 89 is extended as a wire 255 to pass downwardly through a brass bush 256 in the bottom insulator 183 and then horizontally to leave casing 171 between bottom insulating disc 176 and insulator 183.

As most clearly shown in FIG. 23, brass bush 256 has a head flange 257 and is fitted at its lower end with a nut 258 whereby it is firmly clamped in position. Gaskets 259, 261 are disposed beneath head flange 257 and above nut 258 respectively.

At the location where wire 255 is extended horizontally to leave the casing the upper face of disc 176 and the lower face of insulator 183 are grooved to receive and clamp onto the wire. Disc 176 and insulator 183 are also extended radially outwardly at this location to form tabs which extend out beneath casing 171 and ensure proper insulation of the wire through to the outer periphery of the casing.

Outside the casing, wire 255 is connected to a cathode terminal bolt 262. Terminal bolt 262 has a head which is received in a socket in separate head piece 263 shaped to suit the cylindrically curved inner periphery of the cathode and nickel plated to resist chemical attack by the electrolyte solution. The stem of the terminal bolt extends through openings in the cathode and peripheral wall portion 188 of insulator 183 and air insulating bush fitted in an aligned opening in the casing wall 172. The head piece 263 of the terminal bolt is drawn against the inner periphery of the cathode by tightening of a clamping nut 265 and the end of wire 255 has an eye which is clamped between nut 265 and a washer 266 by tightening a terminal end nut 267. A washer 268 is provided between nut 265 and brush 264 and a sealing O-ring 269 is fitted in an annular groove in the bolt stem to engage the inner periphery of the bush in order to prevent escape of electrolyte solution. The terminal connection is covered by a cover plate 271 held in place by fixing screws 272.

The two ends of the primary transformer coil 88 are connected to strip conductors 273, 274 which extend upwardly through the central portion of upper insulator 183. The upper ends of conductors 273, 274 project upwardly as pins within a socket 275 formed in the top of upper insulator 183. The top of socket 275 is closed by a cover 276 which is held by a centre stud 277 and through which wires 278, 279 from the external circuit are extended and connected to conductors 273, 274 by push-on connectors 281, 282.

The transformer connections shown in FIG. 14 are in accordance with the circuit of FIG. 2, i.e. the ends of secondary coil 89 are connected directly between the anode and the cathode. Transformer TR2 is a step-down transformer and, assuming an input of pulses of 22 amps at 300 volts and a coil ratio between the primary and secondary of 10:1 the output applied between the anode and the cathode will be pulses of 200 amps at a low voltage of the order of 3 volts. The voltage is well in excess of that required for electrolysis to proceed and the very high current achieved produces a high rate of yield of hydrogen and oxygen. The rapid discharge of energy which produces the large current flow will be accompanied by a release of heat. This energy is not entirely lost in that the consequent heating of the electrolyte solution increases the mobility of the ions which tends to increase the rate of electrolysis.

The configuration of the anode and cathode arrangement of electrolytic cell 41 is of significant importance. The fluted external periphery of the anode causes a concentration of current flow which produces a better gas yield over a given electrode area. This particular configuration also causes the surface area of the anode to be extended and permits an arrangement in which the anode and cathode have equal surface areas which is most desirable in order to minimize electrical losses. It is also desirable that the anode and cathode surfaces at which gas is produced be roughened, for example by sand-blasting. This promotes separation of the gas bubbles from the electrode surfaces and avoids the possibility of over voltages.

The arrangement of the secondary transformer in which the central anode is surrounded by the cathode is also of great importance. The anode, being constructed of a magnetic material, is acted on by the magnetic field of transformer TR2 to become, during the period of energization of that transformer, a strong conductor of magnetic flux. This in turn creates a strong magnetic field in the interelectrode space between the anode and the cathode. It is believed that this magnetic field increases the mobility of the ions in solution thereby improving the efficiency of the cell.

The heat generated by transformer TR2 is conducted via the anode to the electrolyte solution and increases the mobility of the ions within the electrolyte solution as above mentioned. The cooling fins 180 are provided on casing 171 to assist in dissipation of excess generated heat. The location of the transformer within the anode also enables the connections of the secondary coil 89 to the anode and cathode to be made of short, well protected conductors.

As mentioned above the hydrogen and oxygen gas generated in electrolytic cell 41 and collected in ducts 244, 251 is delivered to a gas mixing chamber of the mixing and delivery unit 38. More specifically, these gases are delivered from ducts 244, 251 via escape valves 283, 284 (FIG. 15) which are held in position over discharge ports 285, 286 from the ducts by means of a leaf spring 287. The outer ends of spring 287 engage the valves 283, 284 and the centre part of the spring is bowed inwardly by a clamping stud 288 screwed into a tapped hole in a boss 289 formed in the cell casing 171.

Valve 283 is detailed in FIGS. 28 and 29 and valve 284 is of identical construction. Valve 283 includes an inner valve body 291 having a cap portion 292 and an annular end ring portion 293 which holds an annular valve seat 294. A valve disc 295 is biased against the valve seat by a valve spring 296 reacting against the cap portion 292. An outer valve cover 297 fits around the inner member 291 and is engaged by spring 287 to force the inner member firmly into a socket in the wall of the cell casing so to cover the hydrogen discharge port 285. The end ring portion 293 of the inner body member beds on a gasket 298 within the socket.

During normal operation of the apparatus valves 283, 284 act as simple one-way valves by movements of their spring loaded valve plates. However, if an excessive gas pressure should arise within the electrolytic cell these valves will be forced back against the action of holding spring 287 to provide pressure relief. The escaping excess gas then flows to atmosphere via the mixing and delivery unit 38 as described below. The pressure at which valves 283, 284 will lift away to provide pressure relief may be adjusted by appropriate setting of stud 288, which setting is held by a nut 299.

The construction of the gas mixing and delivery unit 38 is shown in FIGS. 30 and 40. It comprises an upper body portion 301 which carries an air filter assembly 302, an intermediate body portion 303, which is bolted to the casing of electrolytic cell 41 by six studs 304, and successive lower body portions 305, 300, the latter of which is bolted to the inlet manifold of the engine by four studs 306.

The bolted connection between intermediate body portion 303 and the casing of the electrolytic cell is sealed by a gasket 307. This connection surrounds valves 283, 284 which deliver hydrogen and oxygen gases directly into a mixing chamber 308 (FIG. 34) defined by body portion 303. The gases are allowed to mix together within this chamber and the resulting hydrogen and oxygen mixture passes along small diameter horizontal passageway 309 within body portion 303 which passageway is traversed by a rotary valve member 311. Valve member 311 is conically tapered and is held within a correspondingly tapered valve housing by a spring 312 (FIG. 38) reacting against a bush 313 which is screwed into body portion 303 and serves as a mounting for the rotary valve stem 314. Valve member 311 has a diamentral valve port 315 and can be rotated to vary the extent to which this port is aligned with passageway 309 thereby to vary the effective cross-section for flow through that passageway. As will be explained below, the rotational positions of the valve member is controlled in relation to the engine speed.

Passage 309 extends to the lower end of a larger diameter vertical passageway 316 which extends upwardly to a solenoid freed valve 310 incorporated in a valve and jet assembly denoted generally as 317.

Assembly 317 comprises a main body 321 (FIG. 32) closed at the top by a cap 322 when the assembly is clamped to body portion 303 by two clamping studs 323 to form a gas chamber 324 from which gas is to be drawn through jet nozzles 318 into two vertical bores or throats 319 (FIG. 31) in body portion 303. The underside of body 321 has a tapped opening into which is fitted an externally screw threaded valve seat 325 of valve 310. A valve member 326 is biased downwardly against seat 325 by a spring 327 which reacts against cap 322. Spring 327 encircles a cylindrical stem 328 of valve member 326 which stem projects upwardly through an opening in cap 322 so that it may be acted on by solenoid 56 which is mounted immediately above the valve in upper body portion 301.

Solenoid 56 is comprised of an outer insulating casing 366 which has two mounting flanges 367. This casing houses the copper windings constituting coil 55. These are wound on a plastic bobbin 369 disposed about a central mild steel core 371. The core has a bottom flange 372 and the bobbin and coils are held clamped in the casing through insulating closure 373 acted on by flange 372 on tightening of a clamping nut 374 which is fitted to the other end of the core.

Upper body portion 301 of unit 38 is tubular but at one side it has an internal face shaped to suit the exterior profile of solenoid casing 366 and mounting flanges 367. Two mounting screws 375 screw into holes in this face and engage slots 376 in the mounting flanges 367 so that the height of the solenoid above valve 310 can be adjusted. The two terminals 377 are connected into the electrical circuit by wires (not shown) which may be extended into unit 38 via the air filter assembly.

When solenoid 56 is energized its magnetized core attracts valve stem 328 and valve member 326 is lifted until stem 328 abuts the lower flange 372 of the solenoid core. Thus valve 310 is opened when the ignition switch is closed and will close under the influence of spring 327 when the ignition switch is opened. Vertical adjustment of the solenoid position controls the lift of valve member 326 and therefore the maximum fuel flow rate through unit 38.

Electrolyte cell 41 produces hydrogen in the ratio 2:1 to provide a mixture which is by itself completely combustible. However, as used in connection with existing internal combustion engines the volume of hydrogen and oxygen required for normal operation is less than that of a normal fuel air mixture. Thus, a direct application to such an engine of only hydrogen and oxygen in the amount required to meet power demands will result in a vacuum condition within the system. In order to overcome this vacuum condition provision is made to draw make-up air into throats 319 via the air filter assembly 302 and upper body portion 301.

Upper body portion 301 has a single interior passage 328 through which make-up air is delivered to the dual throats 319. It is fastened to body portion 303 by clamping studs 329 and a gasket 331 is sandwiched between the two body portions. The amount of make-up air admitted is controlled by an air valve flap 332 disposed across passage 328 and rotatably mounted on a shaft 333 to which it is attached by screws 334. The valve flap is notched to fit around solenoid casing 366. Shaft 333 extends through the wall of body portion 301 and outside that wall it is fitted with a bracket 335 which carries an adjustable setting screw 336 and a biasing spring 337. Spring 337 provides a rotational bias on shaft 333 and during normal running of the engine it simply holds flap 332 in a position determined by engagement of setting screw 336 with a flange 338 of body portion 301. This position is one in which the flap almost completely closes passage 328 to allow only a small amount of make-up air to enter, this small amount being adjustable by appropriate setting of screw 336. Screw 336 is fitted with a spring 339 so that it will hold its setting.

Although flaps 332 normally serve only to adjust the amount of make-up air admitted to unit 38, it also serves as a pressure relief valve if excessive pressures are built up, either due to excessive generation of hydrogen and oxygen gases or due to burning of gases in the inlet manifold of the engine. In either event the gas pressure applied to flaps 332 will cause it to rotate so as to open passage 328 and allow gases to escape back through the air filter. It will be seen in FIG. 32 that flap mounting shaft 333 is offset from the centre of passage 328 such that internal pressure will tend to open the flap and thus exactly the reverse of the air valve in a conventional gasoline carburettor.

Air filter assembly 302 comprises an annular bottom pan 341 which fits snugly onto the top of upper body portion 301 and domed filter element 342 held between an inner frame 343 and an outer steel mesh covering 344. The assembly is held in position by a wire and eyebolt fitting 345 and clamping nut 346.

Body portion 305 of unit 38 (FIG. 31), which is fastened to body portion 303 by clamping studs 347, carries throttle valve apparatus to control engine speed. It has two vertical bores 348, 349 serving as continuations of the dual throats which started in body portion 303 and these are fitted with throttle valve flaps 351, 352 fixed to a common throttle valve shaft 353 by fixing screws 354. Both ends of shaft 353 are extended through the wall of body portion 305 to project outwardly there from. One end of this shaft is fitted with a bracket 355 via which it is connected as in a conventional carburetor to a throttle cable 356 and also to an automatic transmission kick-down control linkage 357. A biasing spring 358 acts on shaft 353 to bias throttle flaps toward closed positions as determined by engagement of a setting screw 359 carried by bracket 355 with a plate 361 projecting from body portion 303.

The other end of throttle valve shaft 353 carries a lever 362 the outer end of which is connected to a wire link 407 by means of which a control connection is made to the valve stem 314 of valve member 311 via a further lever 406 connected to the outer end of the valve stem. This control connection is such that valve member 311 is at all times positioned to pass a quantity of gas mixture appropriate to the engine speed as determined by the throttle setting. The initial setting of valve member 311 can be adjusted by selection between two connection holes 405 in lever 406 and by bending of link 407.

Body portion 303 is fastened to the bottom body portion 300 of unit 38 by four clamping studs 306. The bottom body portion has two holes 364, 365 which form continuations of the dual throats and which diverge in the downward direction so as to direct the hydrogen, oxygen and air mixture delivered through these throats outwardly toward the two banks of cylinder inlets. Since this fuel is dry, a small quantity of oil vapour is added to it via a passage 403 in body portion 305 to provide some upper cylinder lubrication. Passage 403 receives oil vapour through a tube 404 connected to a tapping on the engine tapped cover. It discharges the oil vapour downwardly onto a relieved top face part 368 of body portion 300 between holes 364, 365. The vapour impinges on the relieved face part and is deflected into the two holes to be drawn with the gases into the engine.

In the illustrated gas mixing and delivery unit 38, it will be seen that passageway 309, vertical passageway 316, chamber 324 and nozzles 318 constitute transfer passage means via which the hydrogen mixture pass to the gas flow duct means comprised of the dual throats via which it passes to the engine. The transfer passage means has a gas metering valve comprised of the valve member 311 and the solenoid operated valve is disposed in the transfer passage means between the metering valve and the gas flow duct means. The gas metering valve is set to give maximum flow rate through the transfer passage means at full throttle setting of throttle flaps 351, 352. The solenoid operated valve acts as an on/off valve so that when the ignition switch is opened the supply of gas to the engine is positively cut-off thereby preventing any possibility of spontaneous combustion in the cylinders causing the engine to "run on". It also acts to trap gas in the electrolytic cell and within the mixing chamber of the mixing and delivery unit so that gas will be available immediately on restarting the engine.

Dumping capacitor C5 will determine a ratio of charging time to discharge time which will be largely independent of the pulse rate and the pulse rate determined by the oscillation transistor Q1 must be chosen so that the discharge time is not so long as to produce overheating of the transformer coils and more particularly the secondary coil 89 of transformer TR2. Experiments indicate that overheating problems are encountered at pulse rates below about 5,000 and that the system will behave much like a DC system, with consequently reduced performance at pulse rates greater than about 40,000. A pulse rate of about 10,000 pulses per minute will be nearly optimum. With the saw tooth wave input and sharply spiked output pulses of the preferred oscillator circuit the duty cycle of the pulses produced at a frequency of 10,000 pulses per minute was about 0.006. This pulse form helps to minimize overheating problems in the components of the oscillator circuit at the high pulse rates involved. A duty cycle of up to 0.1, as may result from a square wave input, would be feasible but at a pulse rate of 10,000 pulses per minute some of the components of the oscillator circuit would then be required to withstand unusually high heat inputs. A duty cycle of about 0.005 would be a minimum which could be obtained with the illustrated type of oscillator circuitry.

From the foregoing description it can be seen that the electrolytic cell 41 converts water to hydrogen and oxygen whenever ignition switch 44 is closed to activate solenoid 51, and this hydrogen and oxygen are mixed in chamber 308. Closure of the ignition switch also activates solenoid 56 to permit entry of the hydrogen and oxygen mixture into chamber 319, when it mixes with air admitted into the chamber by air valve flap 332. As described above, air valve flap 332 may be set to admit air in an amount as required to avoid a vacuum condition in the engine.

In operation the throttle cable 356 causes bracket 355 to pivot about throttle valve shaft 353, which rotates flap 351 to control the amount of hydrogen-oxygen-air mixture entering the engine. At the same time shaft 353 acts via the linkage shown in FIG. 37 to control the position of shaft 314, and shaft 314 adjusts the amount of hydrogen-oxygen mixture provided for mixing with the air. As shown in FIG. 30, bracket 355 may also be linked to a shaft 357, which is connected to the automobile transmission. Shaft 357 is a common type of shaft used for down shifting into a passing gear when the throttle has been advanced beyond a predetermined point. Thus there is provided a compact fuel generation system which is compatible with existing internal combustion engines and which has been designed to fit into a standard passenger automobile.
While the form of apparatus herein described constitutes a preferred embodiment of the invention, it is to be understood that the invention is not limited to this precise form of apparatus, and that changes may be made therein without departing from the scope of the invention.

4.0.3.8. Klein D. US Patent office >Published Applications # 20040074781;
April 22, 2004; from Belleair, FL;
Hydrogen generator for uses in a vehicle fuel system

The present invention discloses an electrolyzer for electrolyzing water into a gaseous mixture comprising hydrogen gas and oxygen gas. The electrolyzer is adapted to deliver this gaseous mixture to the fuel system of an internal combustion engine. The electrolyzer of the present invention comprises one or more supplemental electrode at least partially immersed in an aqueous electrolyte solution interposed between two principle electrodes. The gaseous mixture is generated by applying an electrical potential between the two principal electrodes. The electrolyzer further includes a gas reservoir region for collecting the generated gaseous mixture. The present invention further discloses a method of utilizing the electrolyzer in conjunction with the fuel system of an internal combustion engine to improve the efficiency of said internal combustion engine.

BACKGROUND OF THE INVENTION

[0001] 1. Field of the Invention

[0002] The present invention is related to an apparatus and method of improving the fuel efficiency of an internal combustion engine, and in particular, to an apparatus and method for hydrolyzing water into a mixture comprising hydrogen gas and oxygen gas to be combined with fuel used in an internal combustion engine.

[0003] 2. Background Art

[0004] Federal regulations force automobile manufacturers to constantly seek improvements in fuel efficiency and emissions control. Such governmental regulations have provided a significant impetus for the development of alternative fuel vehicles as well as improvements in vehicle catalytic conversion systems. Alternative fuel sources for automobile applications include natural gas, propane, wood alcohol, hydrogen fuel cells, and electricity. Although the future for each of these alternative sources is promising, considerable improvements are required for each before commercially viable products will be available.

[0005] The addition of a mixture of hydrogen gas (H.sub.2) and oxygen gas (O.sub.2) to the fuel system of an internal combustion engine is known to improve fuel efficiency and decrease the emission of undesired pollutants. These benefits are thought to be the result of more complete combustion induced by the presence of hydrogen such that fuel efficiency increases and incomplete combustion products--soot and carbon monoxide--decrease. However, hydrogen is a flammable gas that is potentially explosive. Accordingly, utilization of hydrogen in vehicular applications must be undertaken with caution.

[0006] The hydrolysis of water is known to produced both hydrogen gas and oxygen gas. Water is of course non-flammable and extremely safe. U.S. Pat. No. 6,209,493 B1 (the '493 patent) and U.S. Pat. No. 5,231,954 (the '954 patent) disclose an electrolysis cell that is used to provide hydrogen and oxygen to the fuel system of an internal combustion engine. The '493 patent discloses a kit that uses such an electrolysis cell to produce hydrogen and oxygen that may either be separated or mixed before the gases are introduced to a vehicle fuel system. Although each of these systems may increase fuel efficiency, each system is complicated by one or more undesirable features. For example, the prior art systems do not have components that are readily removed and replaced by the end users. Furthermore, these electrolysis systems tend to have electrodes that do not have a very high surface area. Hydrogen and oxygen can be produced more efficiently with electrodes having greater surface area.

[0007] Accordingly, there exists a need improved hydrogen-generating systems that are simple to fabricate with end-user replaceable components. Furthermore, it is desirable that such system contain electrodes with high surface areas without occupying significantly more vehicle space.

SUMMARY OF THE INVENTION

[0008] The present invention overcomes the problems encountered in the prior art by providing in one embodiment an electrolyzer for electrolyzing water into a mixture comprising hydrogen gas and oxygen gas. The electrolyzer is adapted to deliver the gaseous mixture to the fuel system of an internal combustion engine that when combusted with the fuel, the efficiency of the engine is improved. The electrolyzer of the present invention comprises:

[0009] an electrolysis chamber;

[0010] an aqueous electrolyte solution comprising water and an electrolyte, the aqueous electrolyte solution partially filling the electrolysis chamber such that a gas reservoir region is formed above the aqueous electrolyte solution;

[0011] two principal electrodes comprising an anode electrode and a cathode electrode, the two principal electrodes at least partially immersed in the aqueous electrolyte solution;

[0012] one or more supplemental electrode at least partially immersed in the aqueous electrolyte solution and interposed between the two principle electrodes that are not connected to the two principal electrodes with a metallic conductor wherein the two principal electrodes and the one or more supplemental electrodes are held in a fixed spatial relationship;

[0013] wherein a gas mixture comprising hydrogen gas and oxygen gas is generated by applying an electrical potential between the two principle electrodes. The utilization of interposed supplemental electrodes that are interposed between the anode and cathode allows for a greatly increased electrode surface area. Furthermore, the relatively simple design of the electrodes--as rectangular or square metallic shapes allows for the electrodes to be easily replaced. The gas mixture of hydrogen and oxygen formed in this embodiment is collected in the gas reservoir region which is adapted to deliver the mixture to the fuel system of an internal combustion engine.

[0014] In another embodiment of the present invention, a method for improving the fuel efficiency of an internal combustion engine is provided. The method comprises using the electrolyzer of the present invention in conjunction with an internal combustion engine. An electrical potential is applied to the two principal electrodes of the electrolyzer thereby caused the electrolyzer to generate a mixture of hydrogen gas and oxygen gas. The gas mixture is then combined with the fuel in the fuel system of the internal combustion engine before the fuel is combusted in the internal combustion engine.

BRIEF DESCRIPTION OF THE DRAWINGS

[0015] FIG. 1 is an exploded view of the electrolyzer of the present invention for improving the efficiency of an internal combustion engine.

[0016] FIG. 2 is top view of a variation of the present invention in which one group of supplemental electrodes are connected to the anode electrode and a second group of supplemental electrodes are connected to the cathode electrode.

[0017] FIG. 3 is a perspective view of the electrode plate securing mechanism of the present invention is provided.

[0018] FIG. 4 is a plumbing schematic showing the integration of the electrolyzer of the present invention into a vehicle.

[0019] FIG. 5 is an electrical schematic showing the integration of the electrolyzer of the present invention into a vehicle.

DETAILED DESCRIPTION OF THE PREFERRED EMBODIMENT(S)

[0020] Reference will now be made in detail to presently preferred compositions or embodiments and methods of the invention, which constitute the best modes of practicing the invention presently known to the inventors.

[0021] The term "electrolyzer" as used herein refers to an apparatus that produces chemical changes by passage of an electric current through an electrolyte. The electric current is typically passed through the electrolyte by applying a voltage between a cathode and anode immersed in the electrolyte. As used herein, electrolyzer is equivalent to electrolytic cell.

[0022] The term "cathode" as used herein refers to the negative terminal or electrode of an electrolytic cell or electrolyzer. Reduction typically occurs at the cathode. [0023] The term "anode" as used herein refers to the positive terminal or electrode of an electrolytic cell or electrolyzer. Oxidation typically occurs at the cathode. [0024] The term "electrolyte" as used herein refers to a substance that when dissolved in a suitable solvent or when fused becomes an ionic conductor. Electrolytes are used in the electrolyzer to conduct electricity between the anode and cathode.

[0025] The term "bicarbonate" as used herein refers to a salt of carbonic acid in which one hydrogen atom has replaced. Accordingly, bicarbonate contains the bicarbonate ion HCO.sub.3.sup.-.

[0026] The term "hydroxide" as used herein refers to a metallic compound containing the hydroxide ion (OH.sup.-). Hydroxides of most metals are basic.

[0027] The term "internal combustion engine" as used herein refers to any engine in which a fuel-air mixture is burned within the engine itself so that the hot gaseous products of combustion act directly on the surfaces of engine's moving parts. Such moving parts include, but are not limited to, pistons or turbine rotor blades. Internal-combustion engines include gasoline engines, diesel engines, gas turbine engines, jet engines, and rocket engines.

[0028] With reference to FIG. 1 an exploded view of the electrolyzer of the present invention for improving the efficiency of an internal combustion engine is provided. Electrolyzer 2 includes electrolysis chamber 4 which holds an electrolyte solution. Electrolysis chamber 4 mates with cover 6 at flange 8. Preferably, a seal between chamber 4 and cover 6 is made by neoprene gasket 10 which is placed between flange 8 and cover 6. Preferably, the electrolyte solution is an aqueous electrolyte solution of water and an electrolyte. Although any electrolyte may be used in practicing the present invention, the preferred electrolytes are bicarbonate, hydroxide, or mixtures thereof. Suitable examples of these electrolytes include, but are not limited to, sodium bicarbonate, potassium hydroxide, sodium hydroxide, or mixtures thereof. The aqueous electrolyte solution partially fills electrolysis chamber 4 during operation to level 10 such that gas reservoir region 12 is formed above the aqueous electrolyte solution. Electrolyzer 2 includes two principle electrodes--anode electrode14 and cathode electrode 16--which are at least partially immersed in the aqueous electrolyte solution. Anode electrode 14and cathode electrode 16 slip into grooves 18 in rack 20. Rack 20 is placed inside chamber 4. One or more supplemental electrodes 24, 26, 28, 30 are also placed in rack 16 (not all the possible supplemental electrodes are illustrated in FIG. 1.) Again, supplemental electrodes 24, 26, 28, 30 are at least partially immersed in the aqueous electrolyte solution and interposed between the anode electrode14 and cathode electrode 16. Furthermore, anode electrode14, cathode electrode 16, and supplemental electrodes 24, 26, 28, 30 are held in a fixed spatial relationship by rack 20. Preferably, anode electrode14, cathode electrode 16, and supplemental electrodes 24, 26, 28, 30 are separated by a distance of about 0.25 inches. The one or more supplemental electrodes allow for enhanced and efficient generation of this gas mixture. Preferably, there are from 1 to 50 supplemental electrodes interposed between the two principal electrodes. More preferably, there are from 5 to 30 supplemental electrodes interposed between the two principal electrodes, and most preferably, there are about 15 supplemental electrodes interposed between the two principal electrodes. Preferably, the two principle electrodes are each individually a metallic wire mesh, a metallic plate, or a metallic plate having one or more holes. More preferably, the two principle electrodes are each individually a metallic plate. A suitable metal from which the two principal electrodes are formed, includes but is not limited to, nickel, nickel containing alloys, and stainless steel. The preferred metal for the two electrodes is nickel. The one or more supplemental electrodes are preferably a metallic wire mesh, a metallic plate, or a metallic plate having one or more holes. More preferably, the one or more supplemental electrodes are each individually a metallic plate. A suitable metal from which the two principal electrodes are formed, includes but is not limited to, nickel, nickel containing alloys, and stainless steel. The preferred metal for the two electrodes is nickel.

[0029] Still referring to FIG. 1, during operation of electrolyzer 2 a voltage is applied between anode electrode 14 and cathode electrode 16 which causes a gaseous mixture of hydrogen gas and oxygen gas to be generated which collects in gas reservoir region 12. The gaseous mixture exits gas reservoir region 12 from through exit port 31 and ultimately is fed into the fuel system of an internal combustion engine. Electrical contact to anode electrode 14 is made through contactor 32 and electrical contact to cathode electrode 16 is made by contactor 33. Contactors 32 and 33 are preferably made from metal and are slotted with channels 34, 35 such that contactors 32, 33 fit over anode electrode 14 and cathode electrode 16. Contactor 32 is attached to rod 37 which slips through hole 36 in cover 6. Similarly, contactor 33 is attached to rod 38 which slips through hole 40 in cover 6. Preferable holes 36, 40 are threaded and rods 37, 38 are threads rods so that rods 37, 38 screw into holes 36, 40. Contactors 32 and 33 also hold rack 20 in place since anode electrode 14 and cathode electrode 16 are held in place by channels 34, 35 and by grooves 18 in rack 20. Accordingly, when cover 6 is bolted to chamber 4, rack 20 is held at the bottom of chamber 4. Electrolyzer 2 optionally includes pressure relief valve 42 and level sensor 44. Pressure relief 42 valve allows the gaseous mixture in the gas reservoir to be vented before a dangerous pressure buildup can be formed. Level sensor 44 ensures that an alert is sounded and the flow of gas to the vehicle fuel system is stopped when the electrolyte solution gets too low. At such time when the electrolyte solution is low, addition electrolyte solution is added through water fill port 46. Electrolyzer 2 may also include pressure gauge 48 so that the pressure in reservoir 4 may be monitored. Finally, electrolyzer 2 optionally includes one or more fins 50 which remove heat from electrolyzer 2.

[0030] With reference to FIG. 2, a variation of the electrolyzer of the present invention is provided. A first group of the one or more supplemental electrodes 52, 54, 56, 58 are connected to anode electrode 14 with a first metallic conductor 60 and a second group of the one or more supplemental electrodes 62, 64, 66, 68 are connected to cathode electrode 16 with second metallic conductor 70.

[0031] With reference to FIG. 3, a perspective view showing the electrode plate securing mechanism of the present invention is provided. Anode electrode14, cathode electrode 16, and supplemental electrodes 24, 26, 28, 30 are held to rack 20 by holder rod 72 which slips through channels 74 in rack 20 and holes in the electrodes (not all the possible supplemental electrodes are illustrated in FIG. 3.) Rack 20 is preferably fabricated from a high dielectric plastic such as PVC, polyethylene or polypropylene. Furthermore, rack 20 holds anode electrode 14, cathode electrode 16, and supplemental electrodes 24, 26, 28, 30 in a fixed spatial relationship. Preferably, the fixed spatial relationship of the two principal electrodes and the one or more supplemental electrodes is such that the electrodes (two principal and one or more supplemental) are essentially parallel and each electrode is separated from an adjacent electrode by a distance from about 0.15 to about 0.35 inches. More preferably, each electrode is separated from an adjacent electrode by a distance from about 0.2 to about 0.3 inches, and most preferably about 0.25 inches. The fixed spatial relationship is accomplished by a rack that holds the two principal electrodes and the one or more supplemental electrodes in the fixed spatial relationship. The electrodes sit in grooves in the rack which define the separations between each electrode. Furthermore, the electrodes are removable from the rack so that the electrodes or the rack may be changed if necessary. Finally, since rack 20 and anode electrode 14 and cathode electrode 16 are held in place as set forth above, the supplemental electrodes are also held in place because they are secured to rack 20 by holder rod 72.

[0032] With reference to FIGS. 4 and 5, a schematic of the plumbing and electrical operation of the present invention is provided. During operation a gaseous mixture of hydrogen and oxygen is formed by the electrolysis of water in electrolyzer 2. Electrolyzer 2 is connected to collection tank 80 by pressure line 82. The gaseous mixture is collected and temporarily stored in collection tank 80. Collection tank 80 optionally includes pressure relief valve 84 to guard against any dangerous pressure build up. Collection tank 80 is connected to solenoid 86 by pressure line 88. Solenoid 86 is in turn connected by pressure line 90 to engine intake manifold 92 of engine 94. Optionally, flash arrestor 96 is incorporated in pressure line 90 to prevent a flame from propagating in tube 88. Furthermore, pressure line 90 also includes orifice 97 to regulate the flow of the gaseous mixture into intake manifold 92. The size of this orifice will depend on the size of the engine. For example, an orifice diameter of about 0.04 is suitable for a 1 liter engine, about 0.06 inches is suitable for a 2.5 liter engine, and about 0.075 inches is suitable for a V8 engine. The applied voltage to electrolyzer 2 is provided through solenoid 98 by electrolyzer battery 100. When the pressure in collection tank 80 drops below about 25 psi, solenoid 98 switches and a voltage of about 12 V is applied between the anode electrode and cathode electrode of electrolyzer 2 Battery isolator 102 allows for charging of vehicle battery 104 and electrolyzer battery 102 by alternator 106 while keeping electrolyzer battery 102 and vehicle battery 104 electrically isolated. Furthermore, solenoid 98 is powered by vehicle battery 104 when main switch 108 is activated. Gas mixer solenoid 86 is also powered by vehicle battery 104 and open when the gas mixture is provided to intake manifold 92. Solenoid 86 also receives feedback from level sensor 44 which causes solenoid 86 to shut off gas flow is the electrolyte solution level in electrolyzer 2 gets too low. Finally, when the method and apparatus of the present invention are used in a vehicle, the operation of the vehicle's oxygen sensor needs to be adjusted to consider the additional oxygen that is added to the fuel system from the electrolyzer. Normally, if the oxygen sensor senses more oxygen, the vehicle's computer would determine that the engine is running lean and open up the fuel injectors to a richer fuel mixture. This is undesirable and would cause poor fuel economy. Electrical lines 110, 112 of oxygen sensor 114 preferably include RC circuit 116. RC circuit 116 includes resistor 118 and capacitor 120. Preferably, resistor 118 is about 1 mega ohm and capacitor 120 is about 1 microfarad. Electrical line 110 is the check engine light signal and electrical line 112 carries the control signal that is related to the amount of oxygen in a vehicle exhaust. Resistor 118 which is in series in electrical line 110 ensures that the vehicle control system interprets the oxygen sensor as operating correctly. Similarly, capacitor 120 provides the vehicle's computer with a signal such that the vehicles fuel injectors do not incorrectly open when the gas from electrolyzer 100 is being supplied to the fuel system. Finally, main switch 108 switches RC circuit in when gas is being supplied (i.e., the electrolyzer is being used) and out when gas is not being supplied.

[0033] In another embodiment of the present invention, a method for increasing the fuel efficiency of an internal combustion engine is provided. The method of this embodiment utilizes the electrolyzer described above in conjunction with an internal combustion engine. Specifically, the method comprises:

[0034] a) providing an electrolyzer comprising:

[0035] an electrolysis chamber;

[0036] an aqueous electrolyte solution comprising water and an electrolyte, the aqueous electrolyte solution partially filling the electrolysis chamber such that a gas reservoir region is formed above the aqueous electrolyte solution;

[0037] two principal electrodes comprising an anode electrode and a cathode electrode, the two principal electrodes at least partially immersed in the aqueous electrolyte solution; and

[0038] one or more supplemental electrode at least partially immersed in the aqueous electrolyte solution and interposed between two principle electrodes that are not connected to the anode or cathode with a metallic conductor wherein the two principal electrodes and the one or more supplemental electrodes are held in a fixed spatial relationship;

[0039] b) applying an electrical potential between the two principal electrodes wherein a gas mixture comprising hydrogen gas and oxygen gas is generated and collected in the gas reservoir region and wherein the electrolyzer is adapted to deliver the gas mixture to the fuel system of an internal combustion engine; and

[0040] c) combining the gas mixture with fuel in the fuel system of an internal combustion engine. The spatial arrangement and the properties of electrodes, the selection of the electrolyte, and the utilization of a rack and retainer to hold the electrodes are the same as set forth above. The method of the present invention further comprises a step of adjusting the operation of an oxygen sensor as set forth above.

[0041] While embodiments of the invention have been illustrated and described, it is not intended that these embodiments illustrate and describe all possible forms of the invention. Rather, the words used in the specification are words of description rather than limitation, and it is understood that various changes may be made without departing from the spirit and scope of the invention.

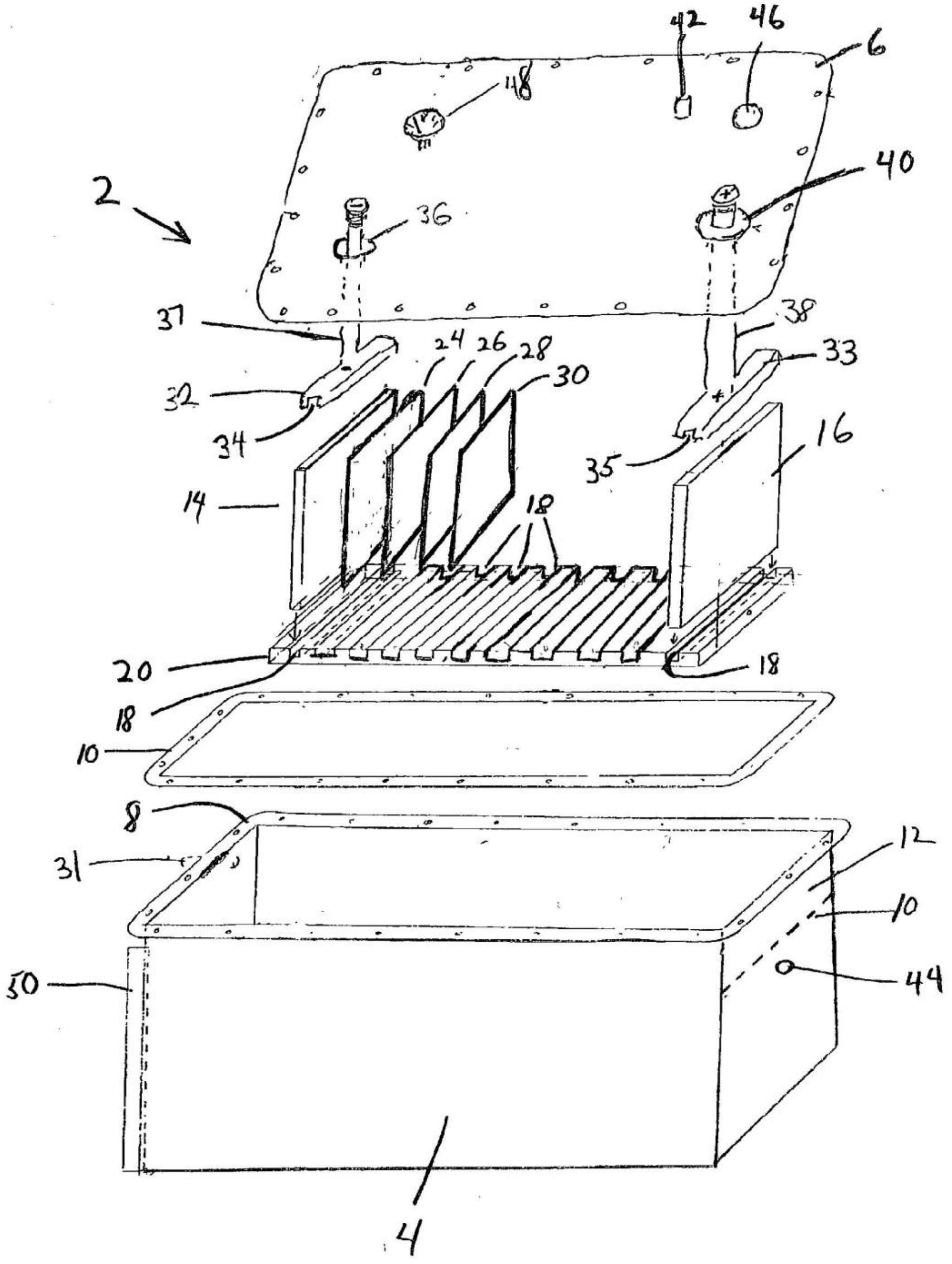
42
46
6
48
2
40
36
37
38
24
26
28
33
30
32
34
16
35
14
18
20
18
18
10
8
12
31
10
50
44
4

Figure 1

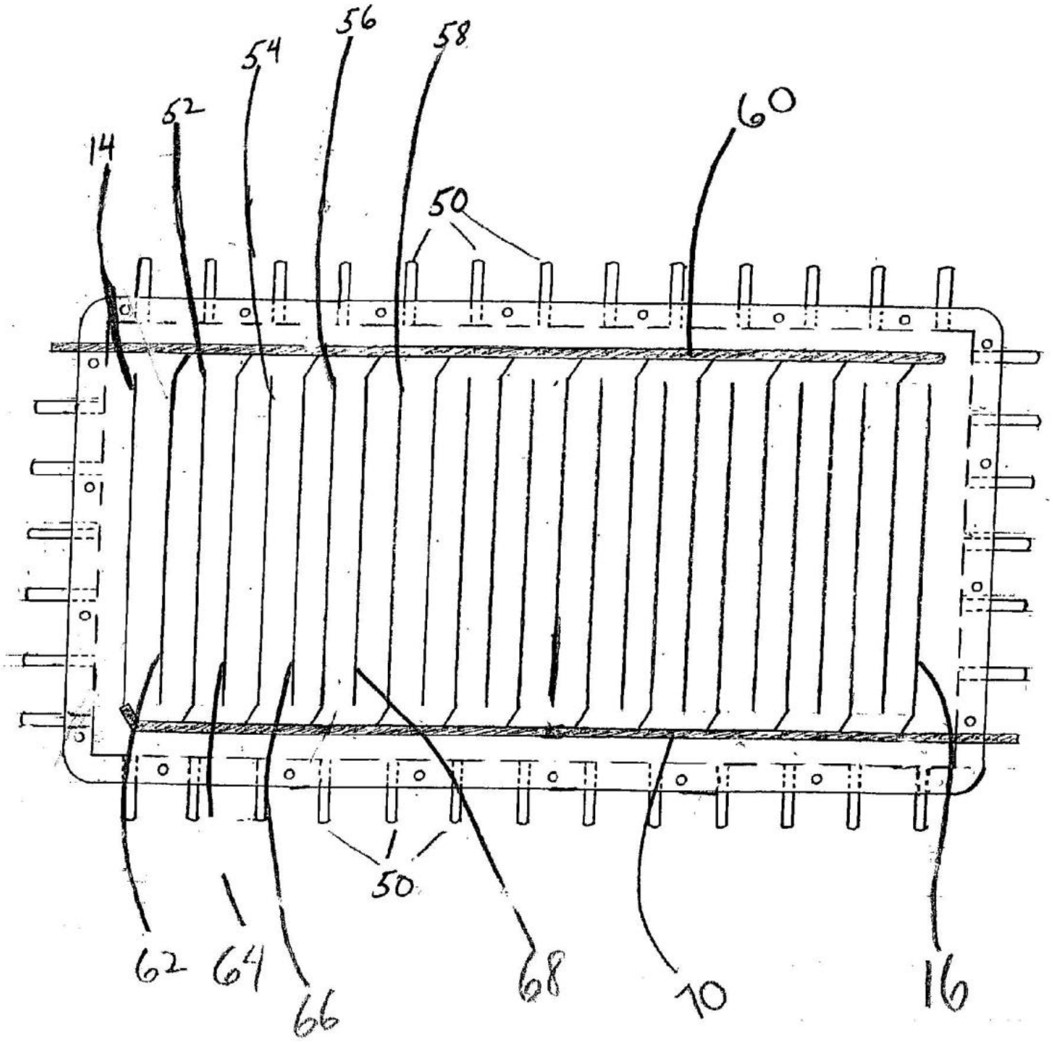

Figure 2

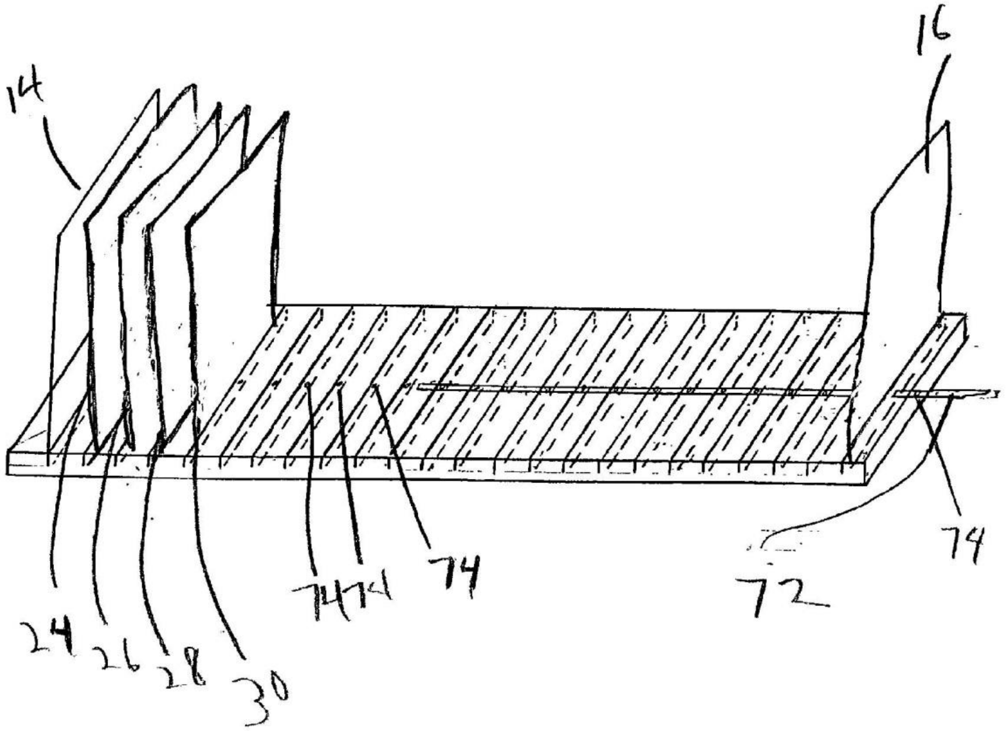

Figure 3

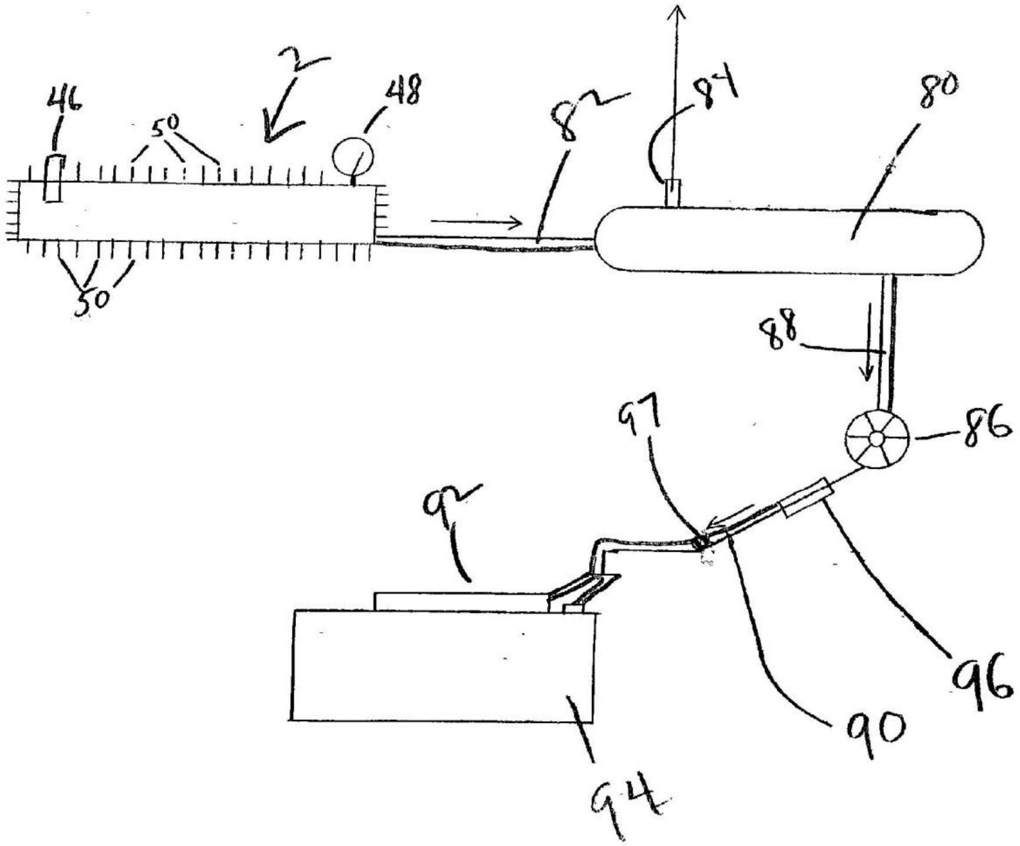

Figure 4

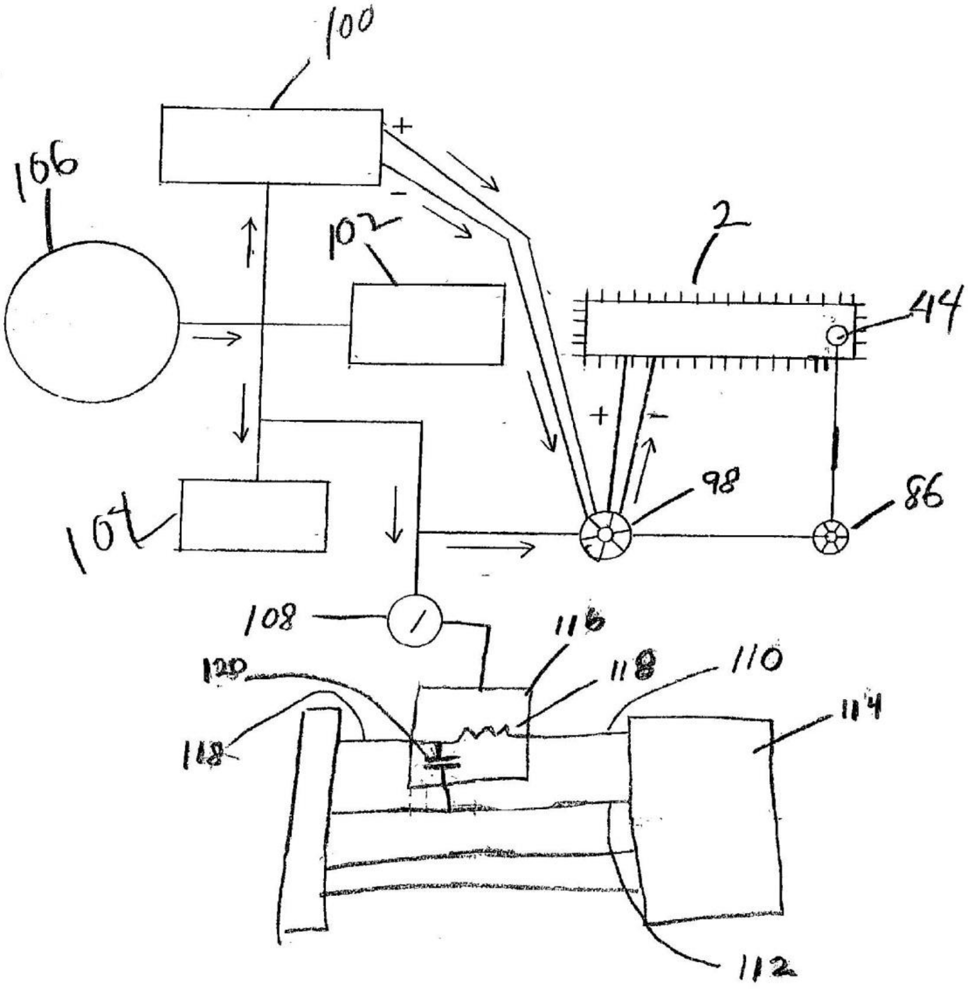

Figure 5

4.0.3.9. Makamats Yoshiro; US #: 5,399,251; March 21, 1995;

System for Generating Hydrogen and Oxygen

A system for generating hydrogen and oxygen includes a tank and a solid polyelectrolyte film which separates the tank into first and second portions. Electrodes are provided on opposed first and second sides of the polyelectrolyte film. A power supply is connected to the electrodes. The system includes means for introducing water into the bottom of the first portion of the tank and a vibrating means for vibrating the polyelectrolyte film, electrodes and water. A power regulator which regulates power from the power supply and includes an electronic element that generates heat is provided. The electronic element is mounted in the tank for heating the water. The hydrogen generated by the system may be supplied together with gasoline to the engine of an automobile while the generated oxygen may be released to the inside of the car.

FIELD OF THE INVENTION

This invention relates to an energy system for electrolyzing water with high efficiency to generate hydrogen and oxygen. Such hydrogen and oxygen may be employed, for example, as a fuel for powering automobiles, ships, airplanes and rockets, and for generating electricity. The system enables reduction of air pollution.

BACKGROUND OF THE INVENTION

In Japan the number of automobile has sharply increased due to the high growth of the economy, and air pollution caused by automobile traffic has become a large problem. Environmental standards have been established concerning nitrogen dioxide, which is an indicator of air pollution, but the yearly average value of nitrogen dioxide has recently turned to rising trend as shown by FIG. 1 according to an investigation by The Environment Agency of the Japanese Government. In order to reduce this problem, electric automobiles have been developed to power low pollution cars. This solution is expensive, provides only short running distances per charge and results in low powered vehicles.

Using methanol to power cars results in half of the running distance than is obtained with conventional gasoline for each filling of the tank, and a supply organization for distributing methanol is not complete.

Compressed natural gas automobiles also have short running distances per charge and their total weight increases due to the necessity of mounting a gas cylinder on the vehicle.

Fuel mounting technology and safety assurance for driving hydrogen powered automobiles have not been solved yet. Gas turbine automobiles have low reliability, efficiency and reaction to acceleration and deceleration, and exhaust too much nitrogen dioxide. Sterling engines are heavy and bulky and require long starting times, and their reliability has not been confirmed. Hydrogen automobiles using electricity and diesel engines are heavy, and more study is required for controlling such engines. With gasoline Cars using LPG jointly, the cost of improvement is very expensive, and also LPG distribution is not fully available.

Many ways have been studied for decreasing the exhaust composition of air pollution from automobile engine. In accordance with one of these techniques, the combustion of diluted fuel has been tried. Such techniques generally complicate the construction of engine, in comparison with conventional engines.

SUMMARY OF THE INVENTION

This invention is directed to the provision of a method for reducing or eliminating air pollution by effectively extracting hydrogen from water without changing the construction of the engine. Hydrogen has such properties as wider combustion range, higher combustion speed, less ignition energy and more easily making uniform mixed gas than gasoline, and this invention contemplates. the combustion of diluted mixed gas and decreases the exhaust of nitrogen dioxide.

BRIEF DESCRIPTION OF THE DRAWING

In order that the invention may be more clearly understood, it will now be disclosed in greater detail with reference to the accompanying drawing, wherein:

FIG. 1 is a graph showing the yearly change of nitrogen dioxide in the air;

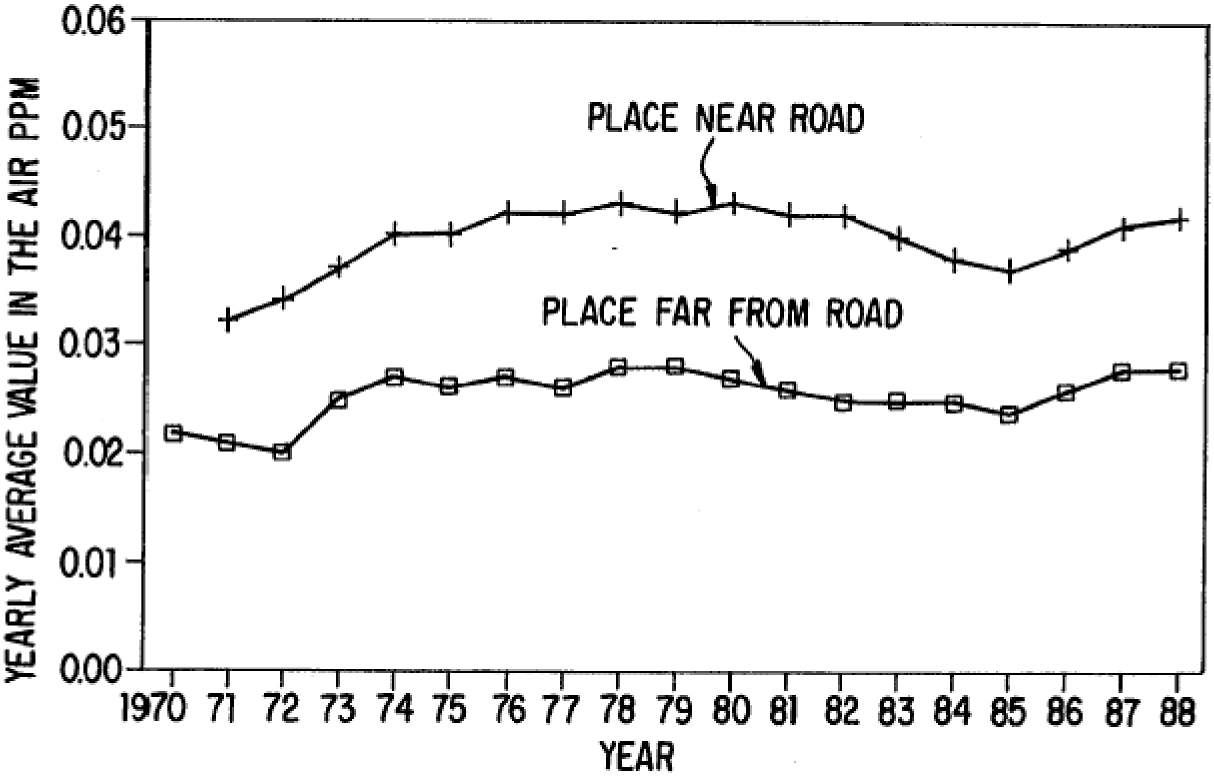

FIG. 1

FIG. 2 shows a longitudinal section of example 1;

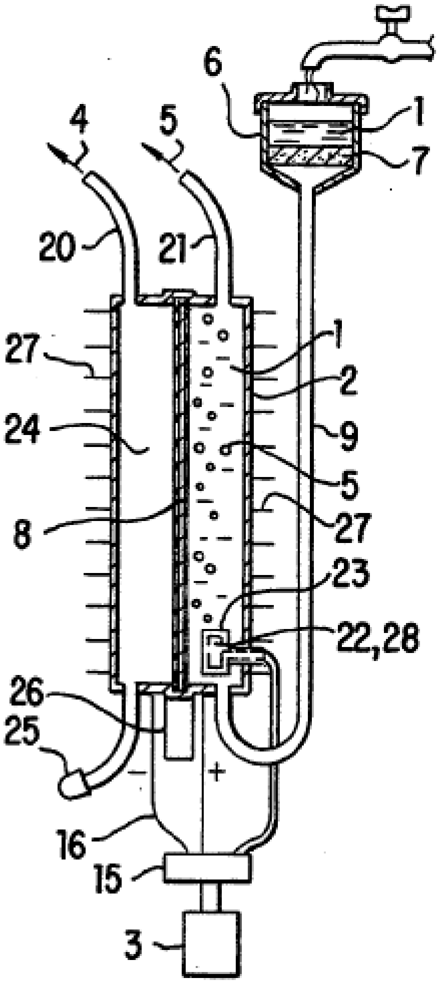

FIG. 2

FIG. 3 shows a side view of FIG. 2;

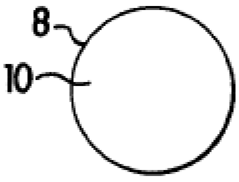

FIG. 3

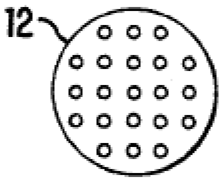

FIG. 4

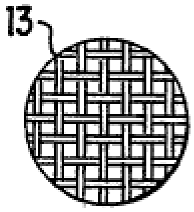

FIG. 5

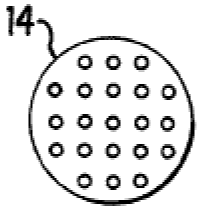

FIG. 6

FIG. 4 shows a side view of part of FIG. 2; FIG. 5 shows a side view of part of FIG. 2; IG. 6 shows an enlarged view of part of FIG. 2; FIG. 7 shows a side view of FIG. 2;

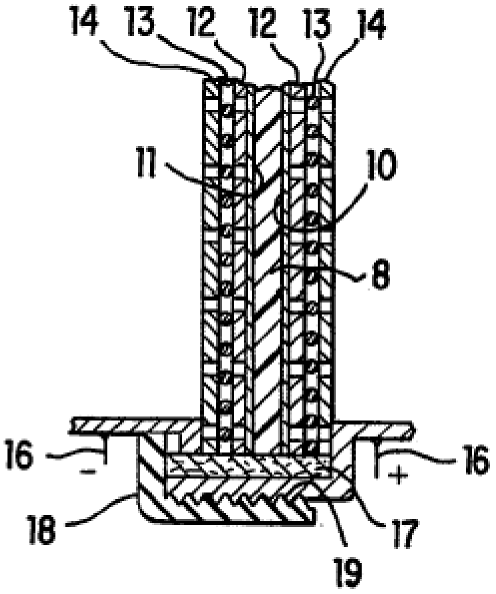

FIG. 7

FIG. 8 shows a side view of example 2;

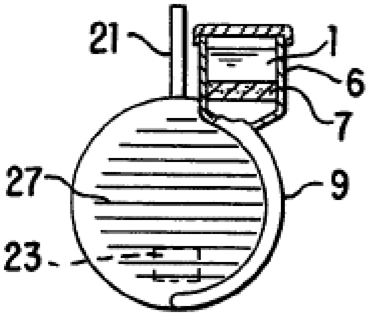

FIG.8

FIG. 9 shows a circuit diagram of example 1;

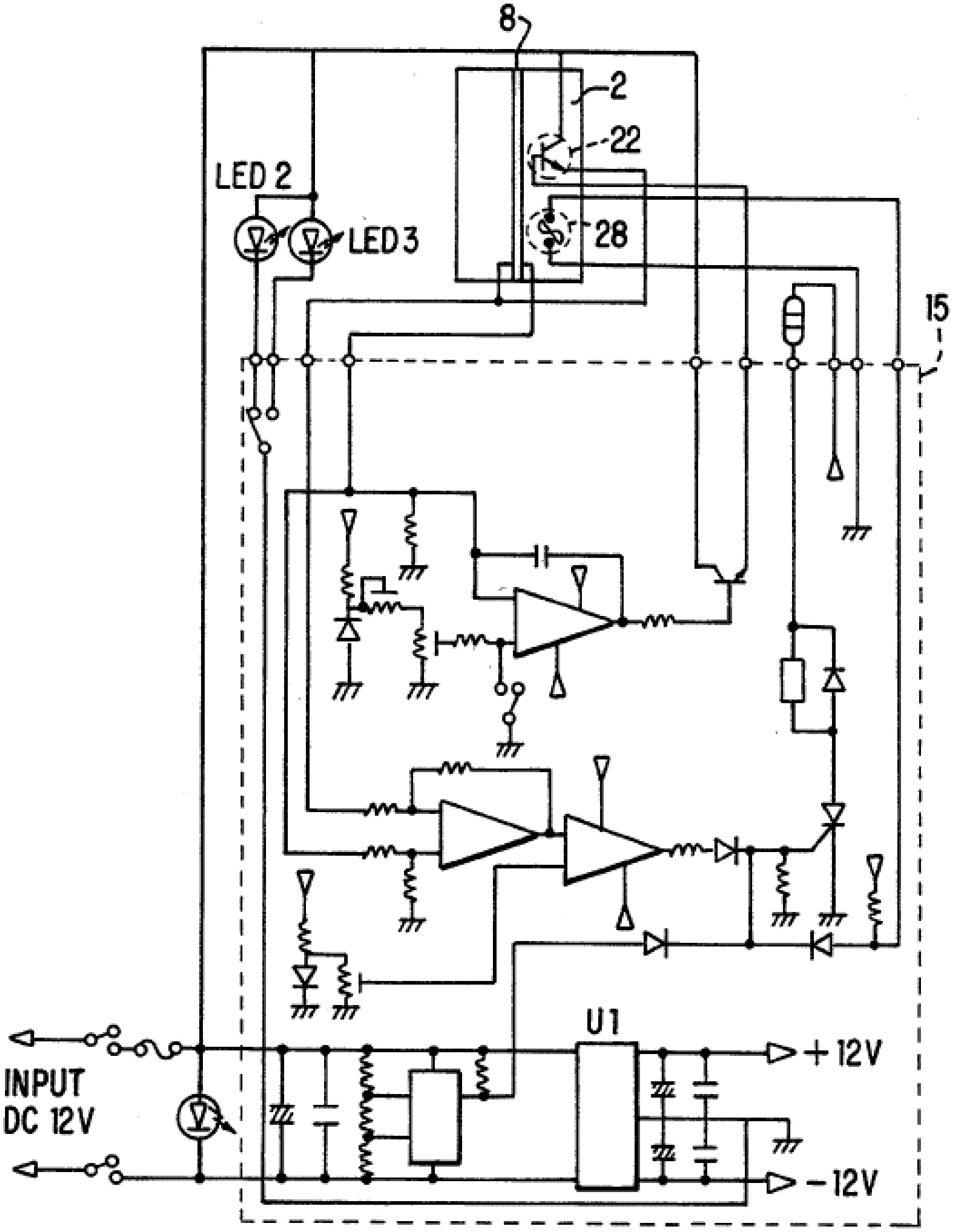

FIG. 9

FIG. 10 shows a longitudinal section of example 3;

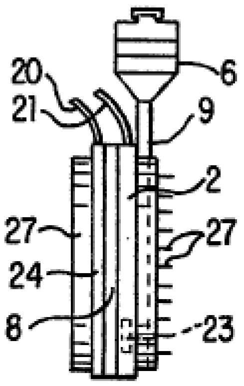

FIG. 10

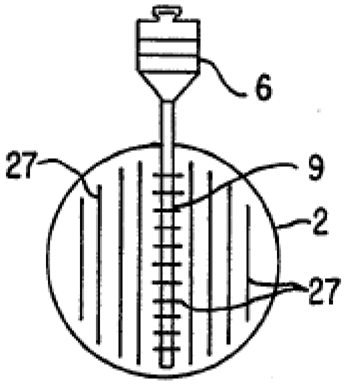

FIG. 11

FIG. 11 shows a side view of FIG. 10;
FIG. 12 shows a side cross section of example 4;

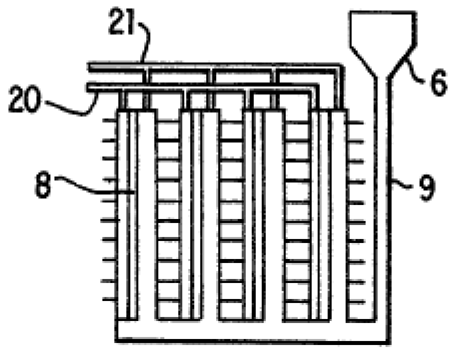

FIG. 12

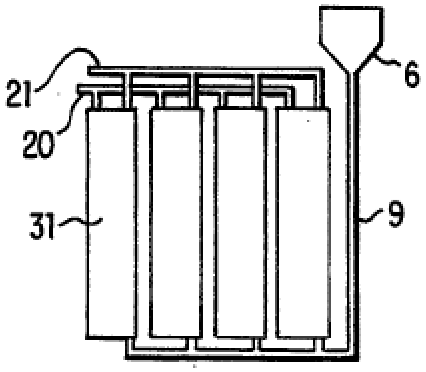

FIG. 13

FIG. 13 shows a side cross section of example 5;
FIG. 14 shows a side cross section of example 6;

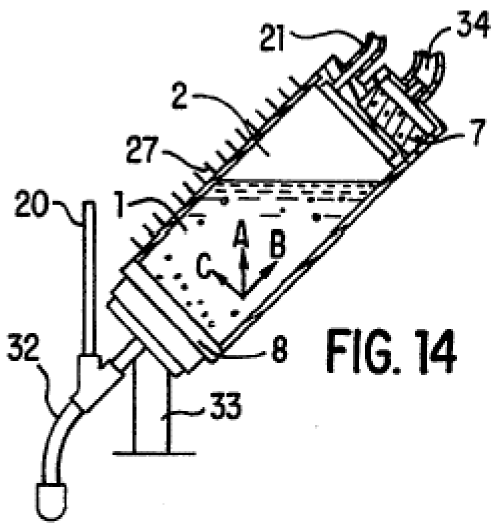

FIG. 14

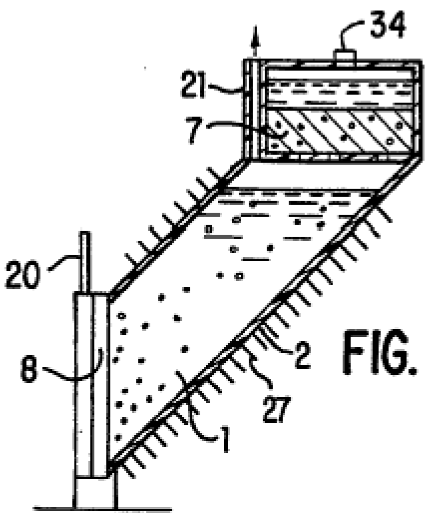

FIG. 15

FIG. 15 shows a side cross section of example 7;
FIG. 16 shows a side cross section of example 8;

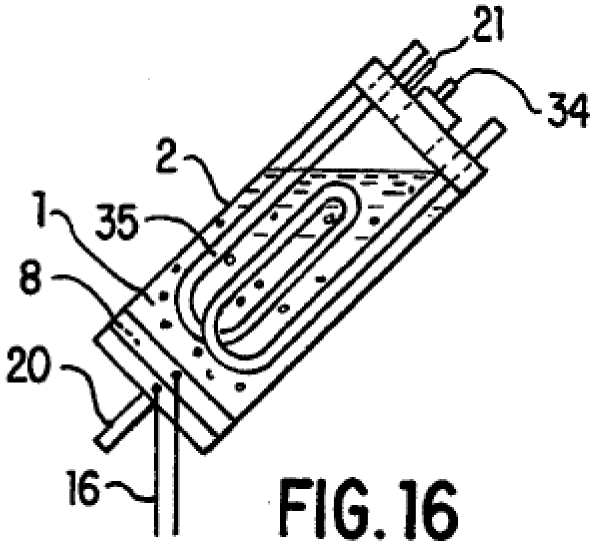

FIG. 16

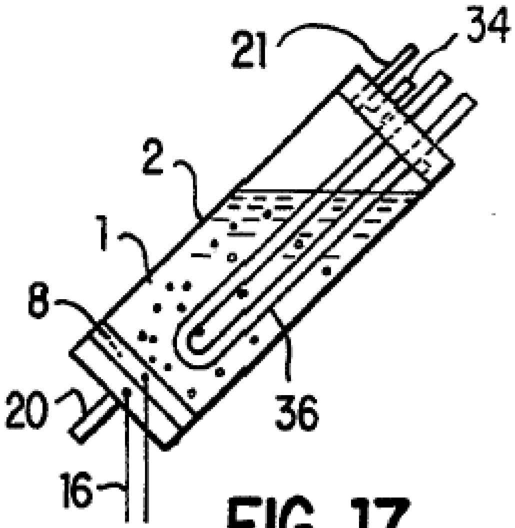

FIG. 17

FIG. 17 shows a side cross section of example 9;
FIG. 18 shows a side cross section of example 1;

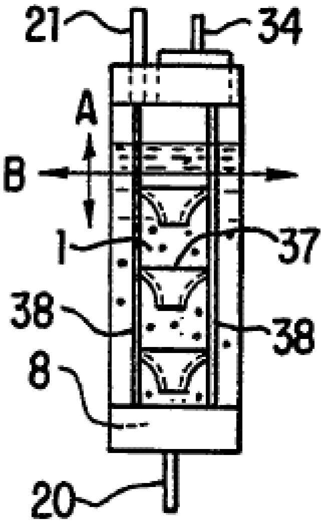

FIG. 18

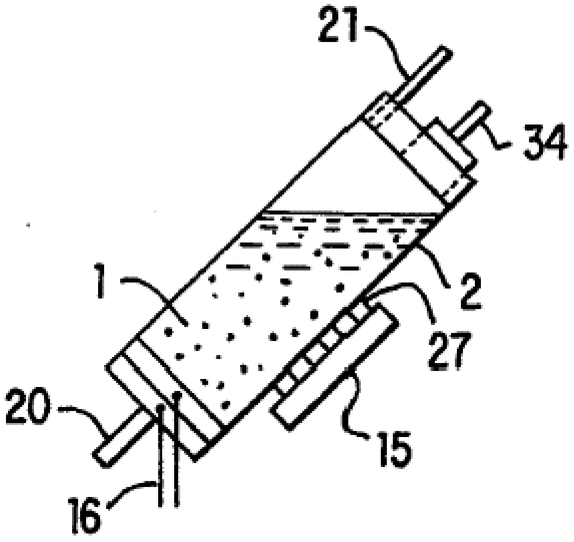

FIG. 19

FIG. 19 shows a side view of example 11;
FIG. 20 shows a plane view of example 12;

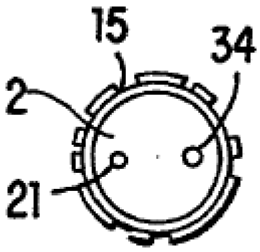

FIG. 20

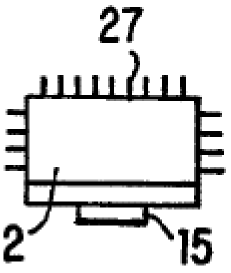

FIG. 21

FIG. 21 shows a plane view of example 13;

FIG. 22 shows a plane view of example 14;

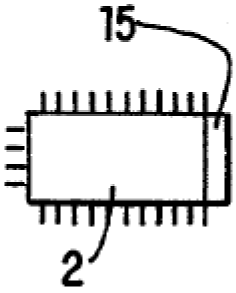

FIG. 22

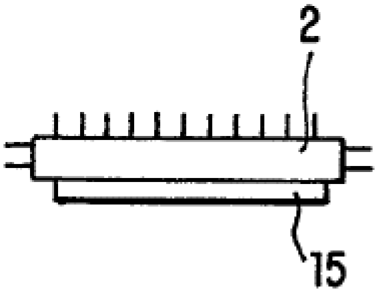

FIG. 23

FIG. 23 shows a plane view of example 15;
FIG. 24 is a graph showing voltage and current;

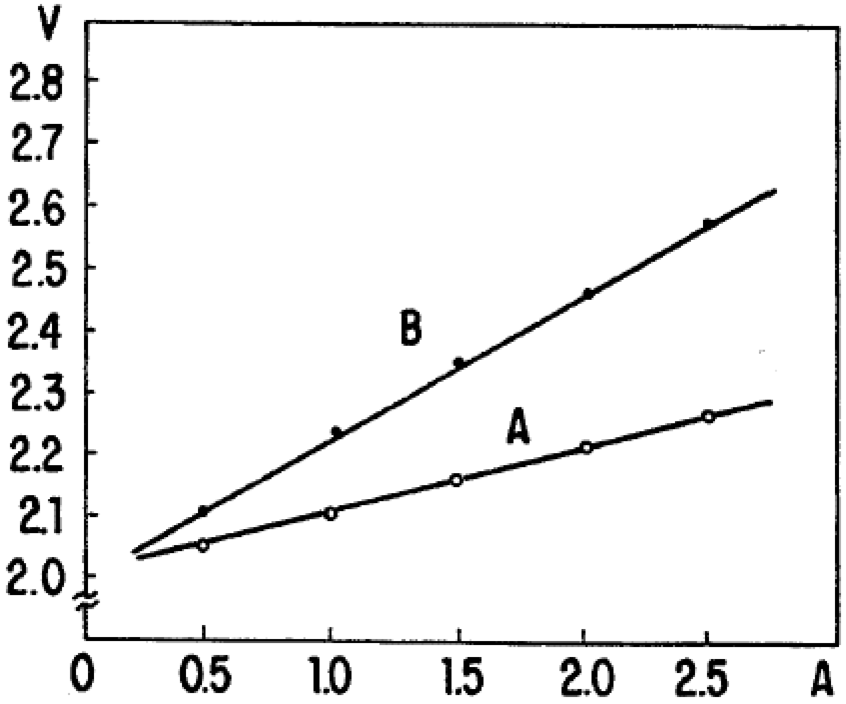

FIG. 24

FIG. 25 shows a process diagram of example 16;

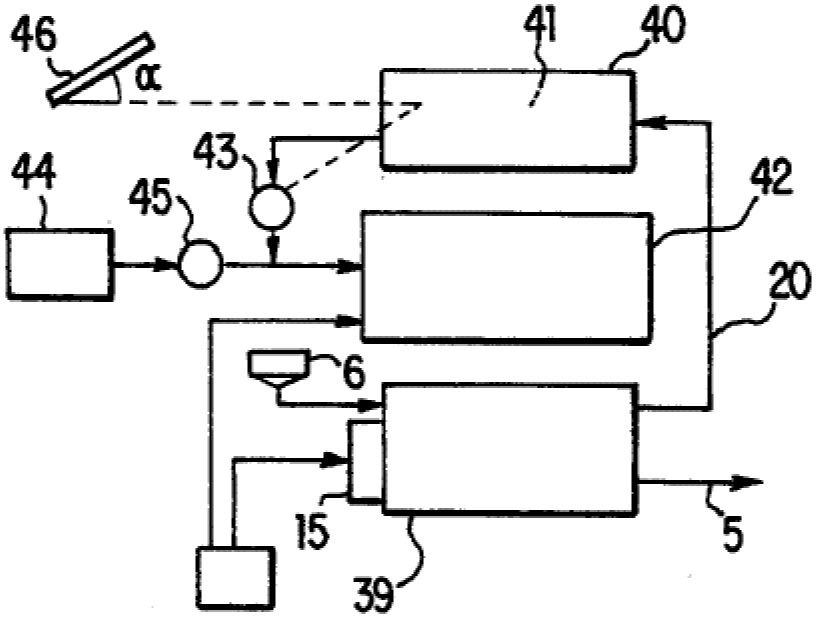

FIG. 25

FIG. 26 is a plane view of example 17;

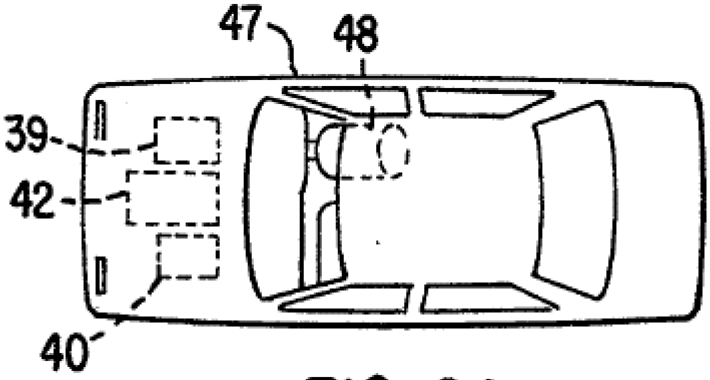

FIG. 26

FIG. 27 to FIG. 44 show graphs of the examples of the invention;

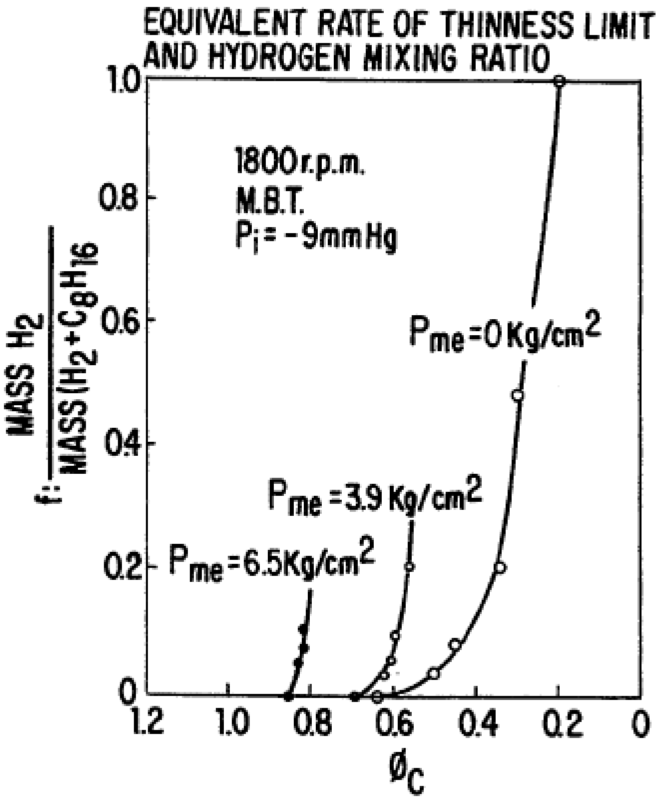

EQUIVALENT RATE OF THINNESS LIMIT AND HYDROGEN MIXING RATIO
1800 r.p.m.
M.B.T.
P_i = -9mmHg
P_{me} = 0 Kg/cm^2
P_{me} = 3.9 Kg/cm^2
P_{me} = 6.5 Kg/cm^2
f: MASS H_2 / MASS (H_2+C_8H_{16})
1.0
0.8
0.6
0.4
0.2
0
1.2
1.0
0.8
0.6
0.4
0.2
0
ϕ_C

FIG. 27

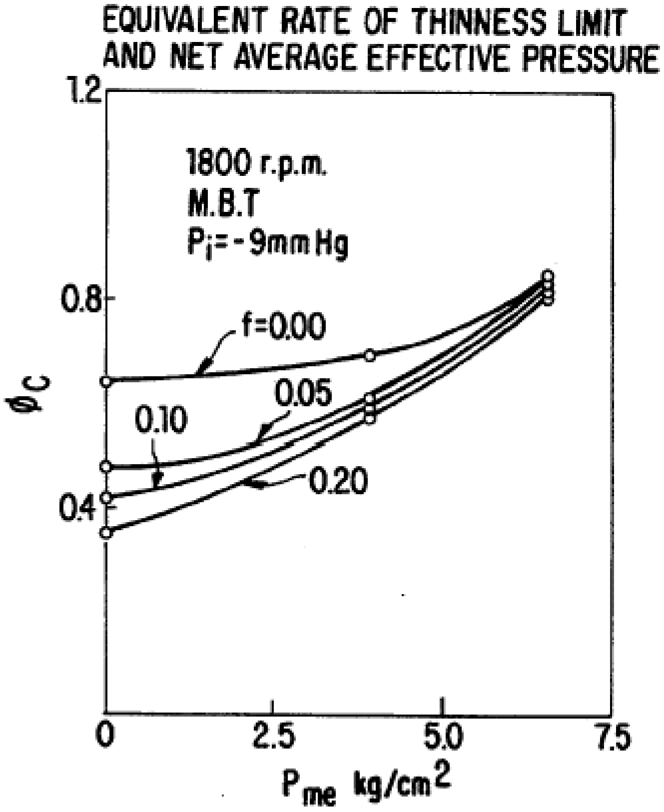
EQUIVALENT RATE OF THINNESS LIMIT
AND NET AVERAGE EFFECTIVE PRESSURE
1800 r.p.m.
M.B.T
P_i= -9mm Hg
f=0.00
0.05
0.10
0.20
ϕ_c
1.2
0.8
0.4
0
2.5
5.0
7.5
P_{me} kg/cm^2

FIG. 28

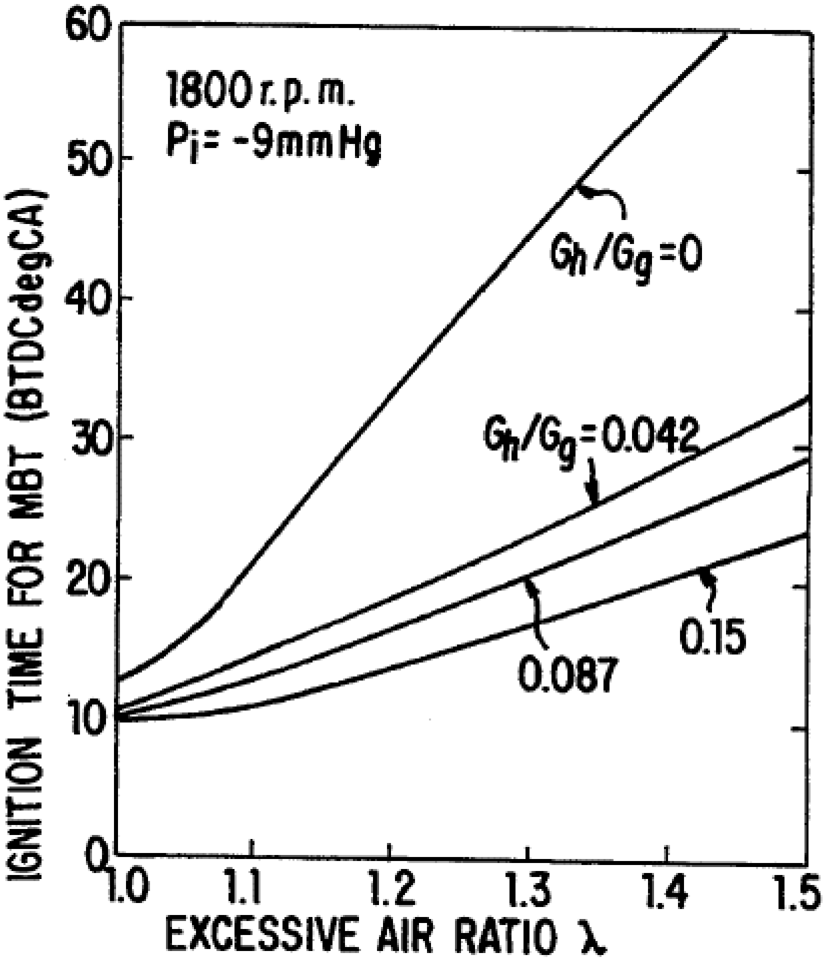
1800 r.p.m.
P_i= -9mmHg
G_h/G_g=0
G_h/G_g=0.042
0.087
0.15
IGNITION TIME FOR MBT (BTDCdegCA)
0
10
20
30
40
50
60
1.0
1.1
1.2
1.3
1.4
1.5
EXCESSIVE AIR RATIO λ

FIG. 29

IGNITION TIME AND NO DENSITY

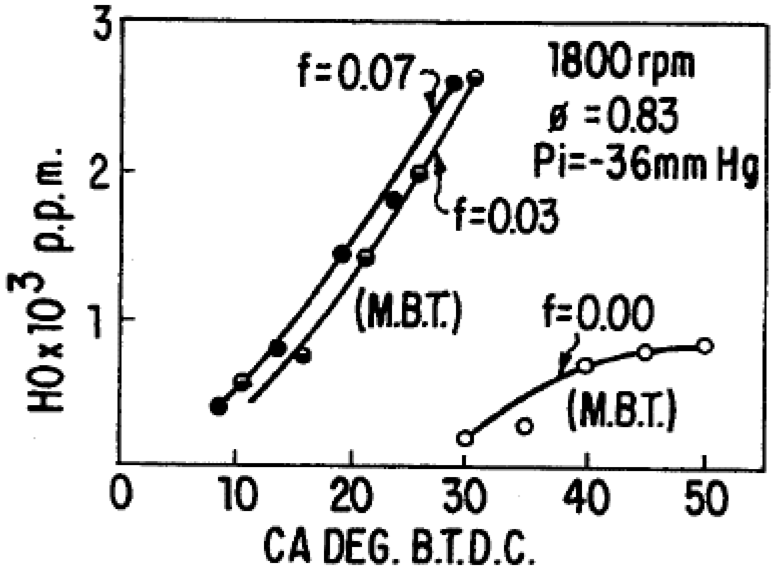

FIG. 30

AVERAGE EFFECTIVE PRESSURE AND NO DENSITY

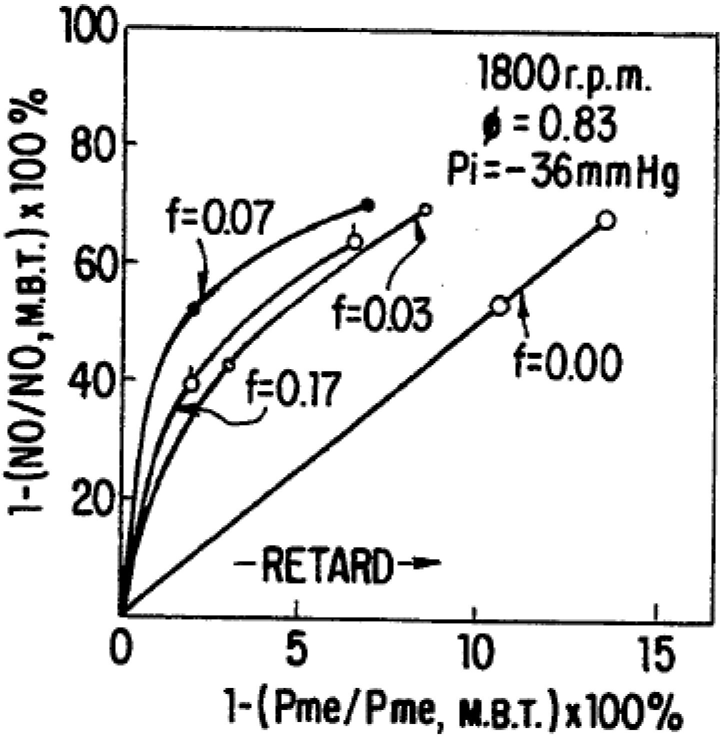

FIG. 31

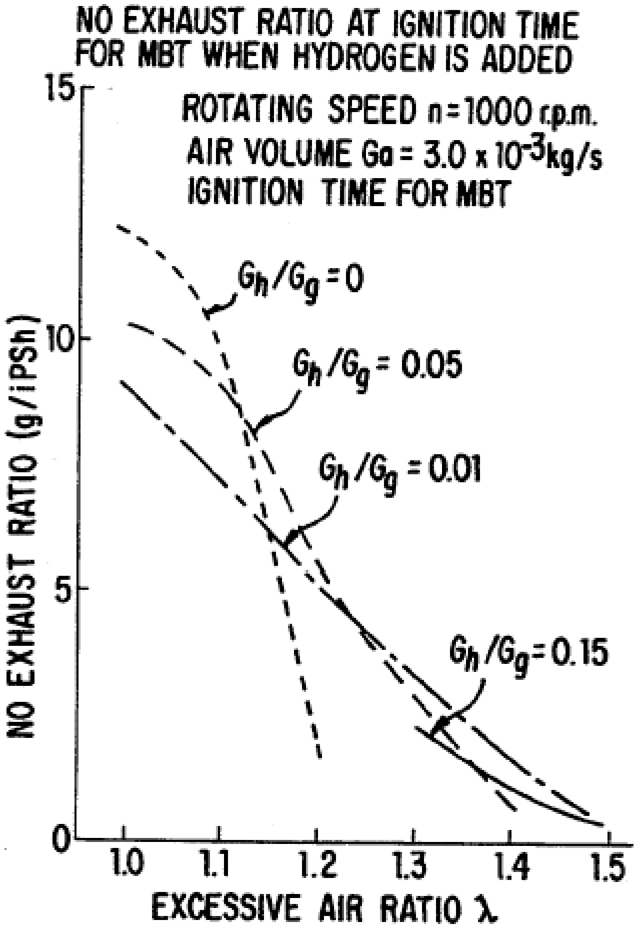

NO EXHAUST RATIO AT IGNITION TIME FOR MBT WHEN HYDROGEN IS ADDED
ROTATING SPEED n=1000 r.p.m.
AIR VOLUME Ga = 3.0 x 10^{-3}kg/s
IGNITION TIME FOR MBT
$G_h/G_g=0$
$G_h/G_g=0.05$
$G_h/G_g=0.01$
$G_h/G_g=0.15$
NO EXHAUST RATIO (g/iPSh)
15
10
5
0
1.0
1.1
1.2
1.3
1.4
1.5
EXCESSIVE AIR RATIO λ

FIG. 32

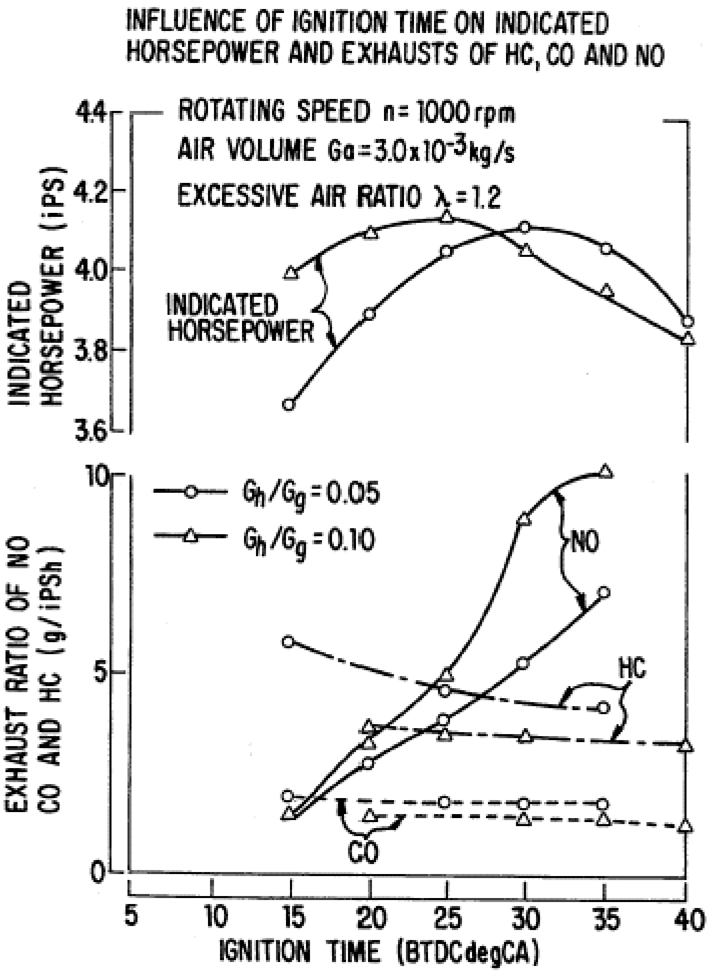
INFLUENCE OF IGNITION TIME ON INDICATED HORSEPOWER AND EXHAUSTS OF HC, CO AND NO
ROTATING SPEED n= 1000 rpm
AIR VOLUME Ga=3.0x10-3 kg/s
EXCESSIVE AIR RATIO λ=1.2
INDICATED HORSEPOWER (iPS)
4.4
4.2
4.0
3.8
3.6
INDICATED HORSEPOWER
EXHAUST RATIO OF NO CO AND HC (g/iPSh)
10
5
0
Gh/Gg=0.05
Gh/Gg=0.10
NO
HC
CO
5
10
15
20
25
30
35
40
IGNITION TIME (BTDCdegCA)

FIG. 33

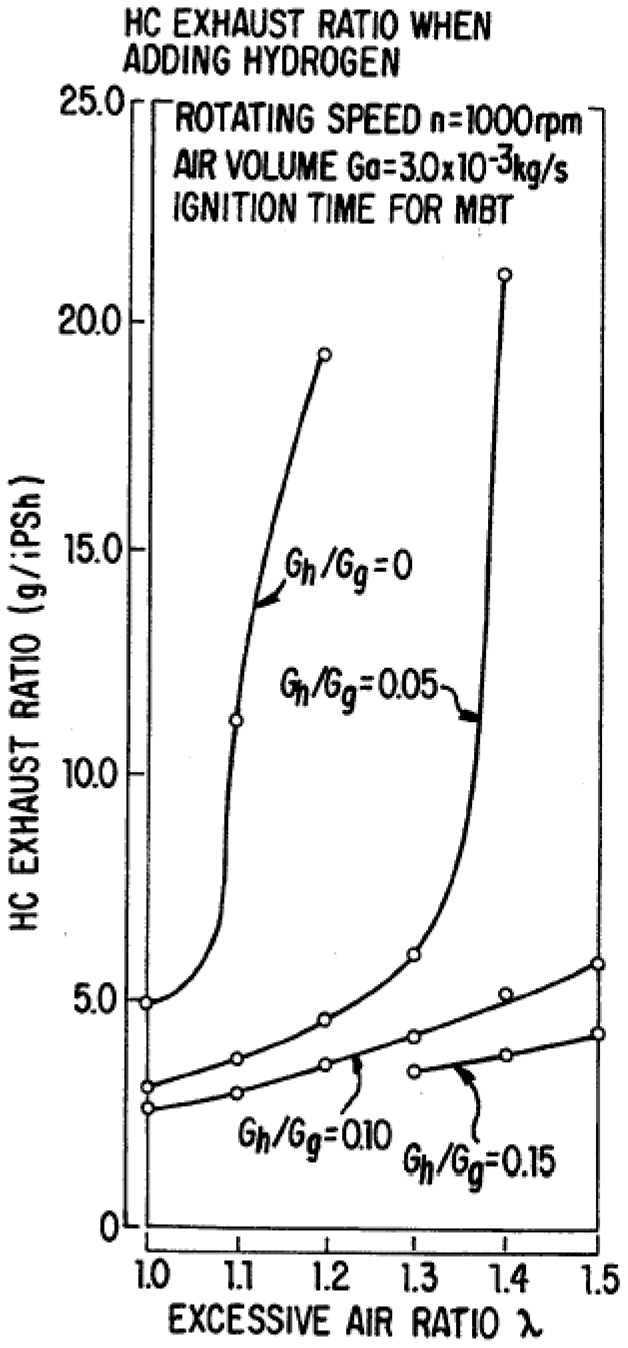
HC EXHAUST RATIO WHEN ADDING HYDROGEN
ROTATING SPEED n=1000rpm
AIR VOLUME Ga=3.0x10-3kg/s
IGNITION TIME FOR MBT
HC EXHAUST RATIO (g/iPSh)
25.0
20.0
15.0
10.0
5.0
0
Gh/Gg=0
Gh/Gg=0.05
Gh/Gg=0.10
Gh/Gg=0.15
1.0
1.1
1.2
1.3
1.4
1.5
EXCESSIVE AIR RATIO λ

FIG. 34

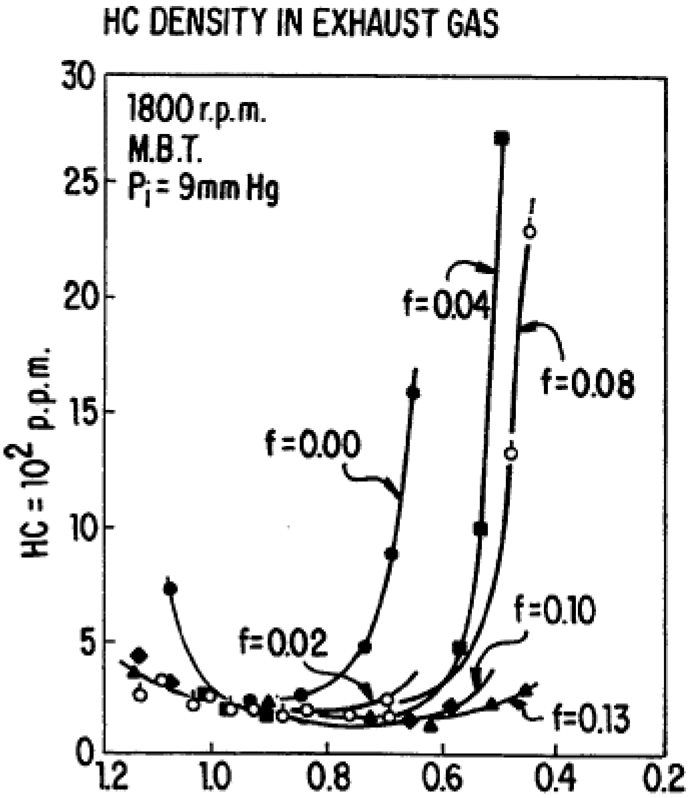
HC DENSITY IN EXHAUST GAS
1800 r.p.m.
M.B.T.
P_i = 9mm Hg
HC = 10^2 p.p.m.
30
25
20
15
10
5
0
1.2
1.0
0.8
0.6
0.4
0.2
f=0.00
f=0.02
f=0.04
f=0.08
f=0.10
f=0.13

FIG. 35

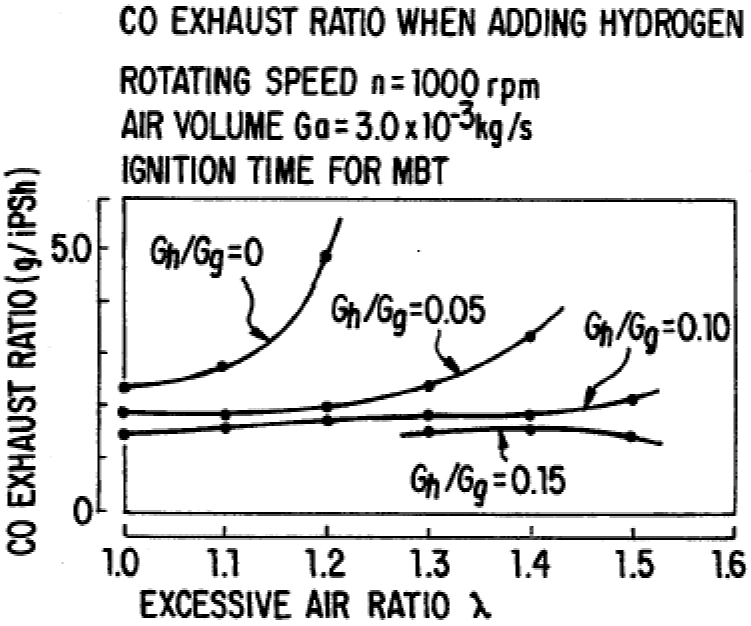
CO EXHAUST RATIO WHEN ADDING HYDROGEN
ROTATING SPEED n=1000 rpm
AIR VOLUME Ga=3.0x10^{-3}kg/s
IGNITION TIME FOR MBT
CO EXHAUST RATIO (g/iPSh)
5.0
0
G_h/G_g=0
G_h/G_g=0.05
G_h/G_g=0.10
G_h/G_g=0.15
1.0
1.1
1.2
1.3
1.4
1.5
1.6
EXCESSIVE AIR RATIO λ

FIG. 36

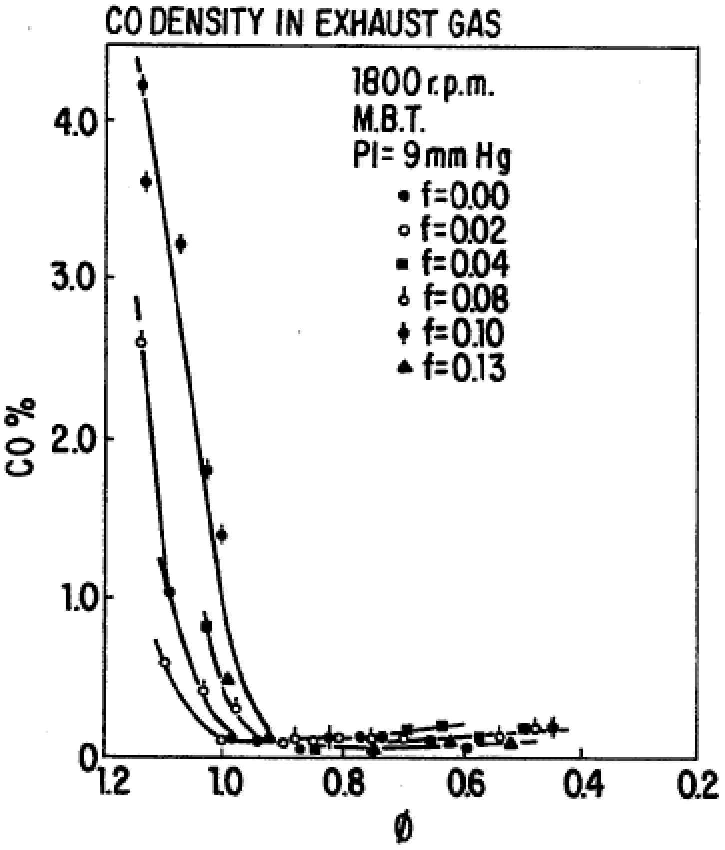
CO DENSITY IN EXHAUST GAS
1800 r.p.m.
M.B.T.
Pl= 9 mm Hg
● f=0.00
○ f=0.02
■ f=0.04
f=0.08
f=0.10
▲ f=0.13
CO %
4.0
3.0
2.0
1.0
0
1.2
1.0
0.8
0.6
0.4
0.2
ø

FIG. 37

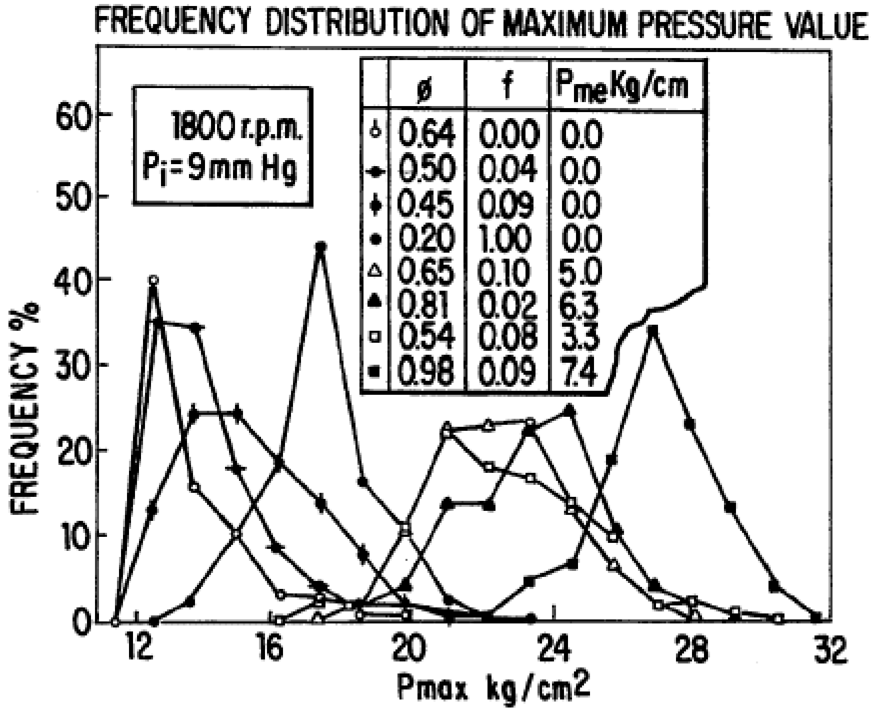
FREQUENCY DISTRIBUTION OF MAXIMUM PRESSURE VALUE
1800 r.p.m.
Pi=9 mm Hg
ø
f
Pme Kg/cm
0.64 0.00 0.0
0.50 0.04 0.0
0.45 0.09 0.0
● 0.20 1.00 0.0
△ 0.65 0.10 5.0
▲ 0.81 0.02 6.3
□ 0.54 0.08 3.3
■ 0.98 0.09 7.4
FREQUENCY %
60
50
40
30
20
10
0
12
16
20
24
28
32
Pmax kg/cm2

FIG. 38

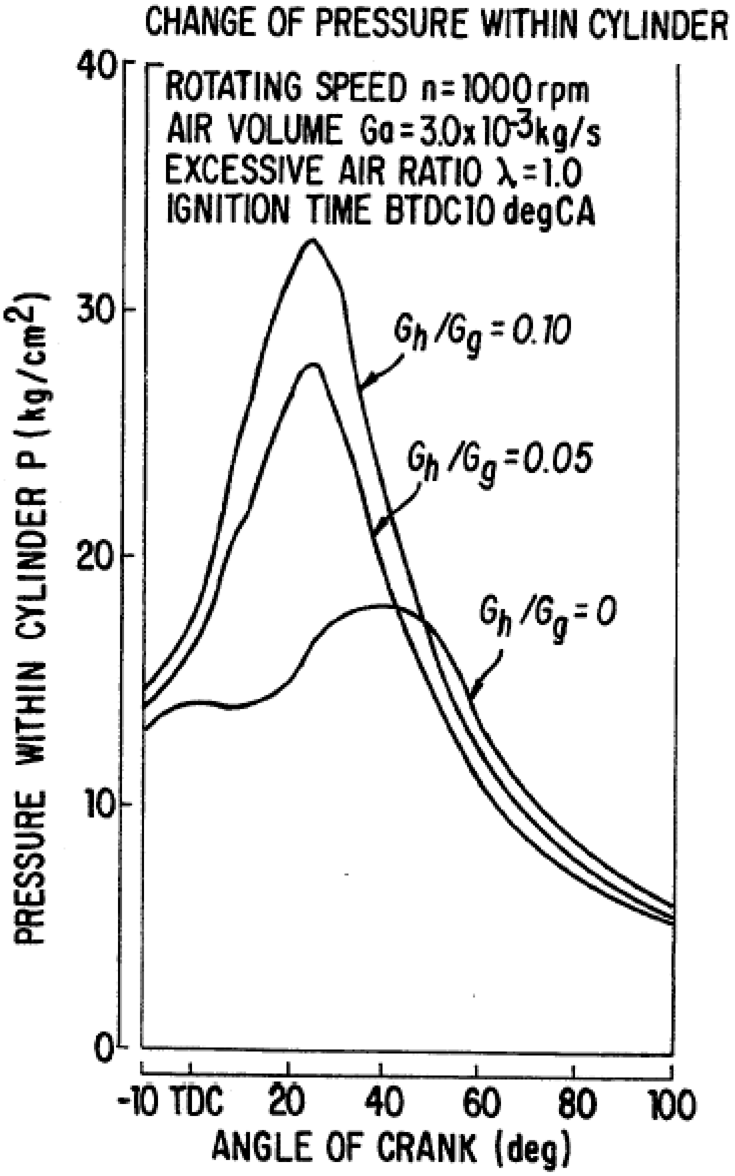
CHANGE OF PRESSURE WITHIN CYLINDER
ROTATING SPEED n=1000rpm
AIR VOLUME Ga=3.0x10-3kg/s
EXCESSIVE AIR RATIO λ=1.0
IGNITION TIME BTDC10 degCA
Gh/Gg=0.10
Gh/Gg=0.05
Gh/Gg=0
PRESSURE WITHIN CYLINDER P (kg/cm2)
40
30
20
10
0
-10
TDC
20
40
60
80
100
ANGLE OF CRANK (deg)

FIG. 39

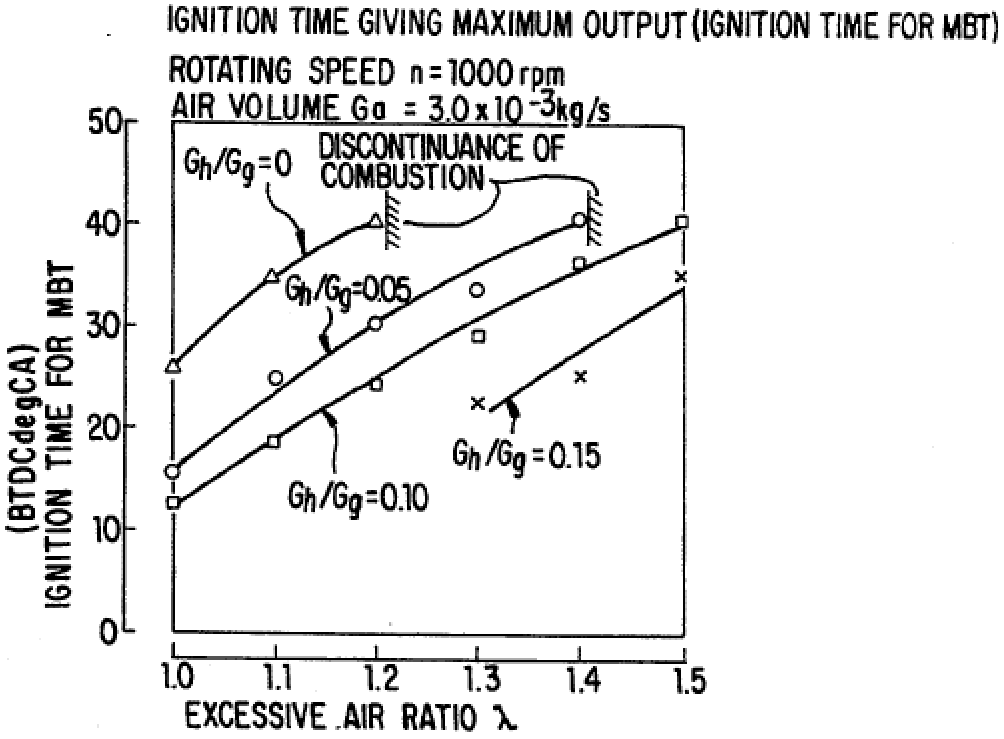
IGNITION TIME GIVING MAXIMUM OUTPUT (IGNITION TIME FOR MBT)
ROTATING SPEED n=1000 rpm
AIR VOLUME Ga = 3.0 x 10^-3 kg/s
Gh/Gg=0
DISCONTINUANCE OF COMBUSTION
Gh/Gg=0.05
Gh/Gg=0.10
Gh/Gg=0.15
IGNITION TIME FOR MBT (BTDCdegCA)
50
40
30
20
10
0
1.0
1.1
1.2
1.3
1.4
1.5
EXCESSIVE AIR RATIO λ

FIG. 40

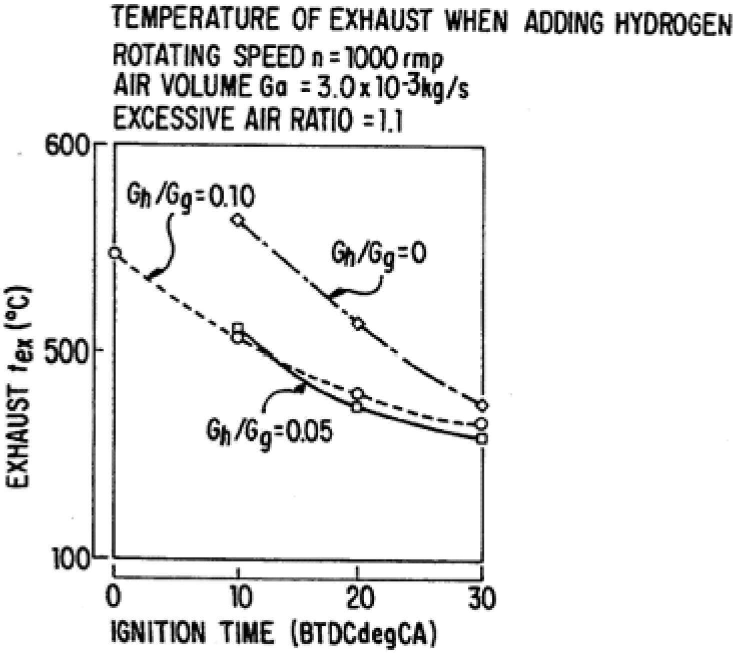
TEMPERATURE OF EXHAUST WHEN ADDING HYDROGEN
ROTATING SPEED n = 1000 rmp
AIR VOLUME Ga = 3.0 x 10^-3 kg/s
EXCESSIVE AIR RATIO = 1.1
Gh/Gg=0.10
Gh/Gg=0
Gh/Gg=0.05
EXHAUST tex (°C)
600
500
100
0
10
20
30
IGNITION TIME (BTDCdegCA)

FIG. 41

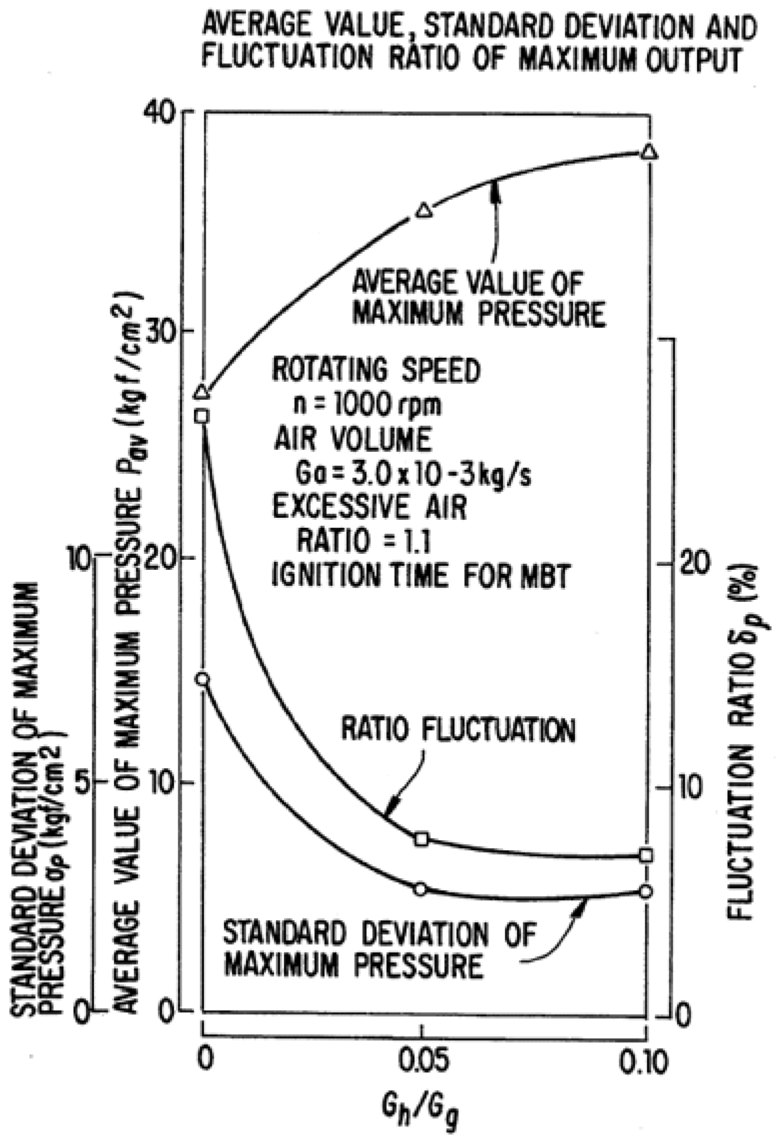
AVERAGE VALUE, STANDARD DEVIATION AND FLUCTUATION RATIO OF MAXIMUM OUTPUT
AVERAGE VALUE OF MAXIMUM PRESSURE
ROTATING SPEED
n = 1000 rpm
AIR VOLUME
Ga = 3.0 x 10 -3 kg/s
EXCESSIVE AIR
RATIO = 1.1
IGNITION TIME FOR MBT
RATIO FLUCTUATION
STANDARD DEVIATION OF MAXIMUM PRESSURE
STANDARD DEVIATION OF MAXIMUM PRESSURE σ_p (kgf/cm2)
AVERAGE VALUE OF MAXIMUM PRESSURE P_{av} (kg f /cm^2)
FLUCTUATION RATIO δ_p (%)
0
5
10
0
10
20
30
40
0
10
20
0
0.05
0.10
G_h/G_g

FIG. 42

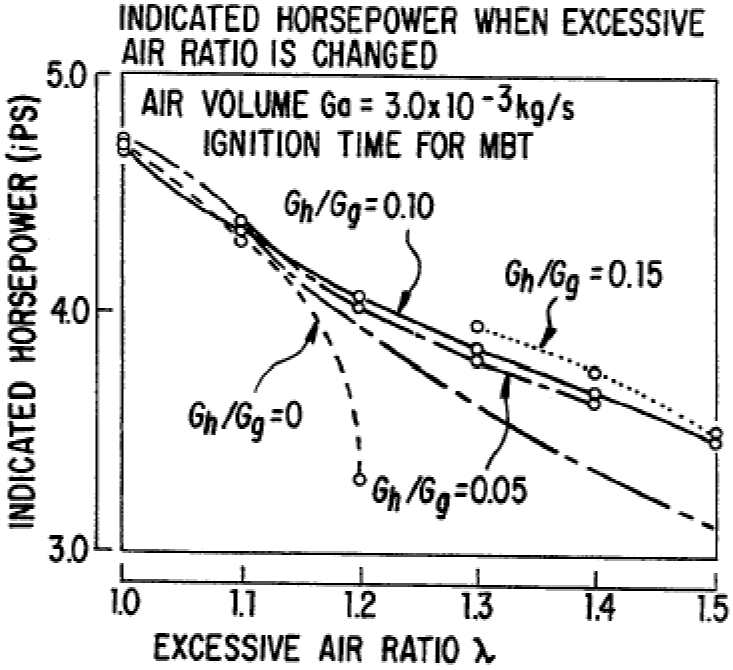

INDICATED HORSEPOWER WHEN EXCESSIVE AIR RATIO IS CHANGED
AIR VOLUME Ga = 3.0x10⁻³kg/s
IGNITION TIME FOR MBT
Gh/Gg=0.10
Gh/Gg=0.15
Gh/Gg=0
Gh/Gg=0.05
INDICATED HORSEPOWER (iPS)
5.0
4.0
3.0
1.0
1.1
1.2
1.3
1.4
1.5
EXCESSIVE AIR RATIO λ

FIG. 43

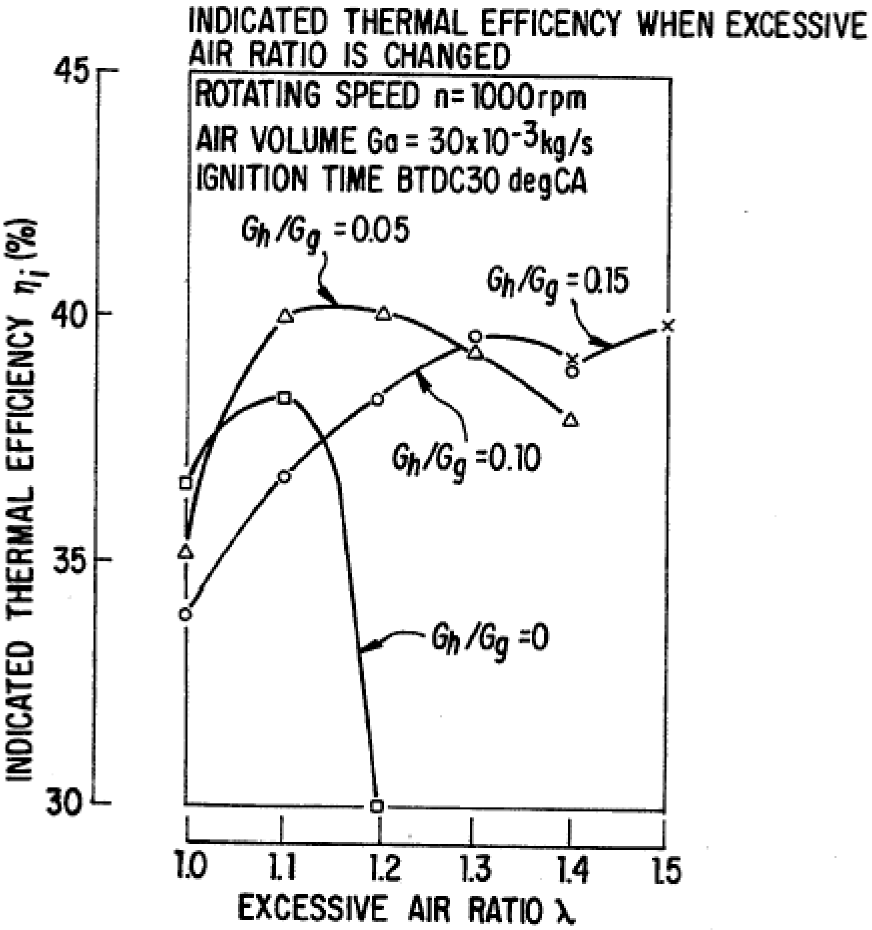

FIG. 44

FIG. 45 shows a side view of example 18;

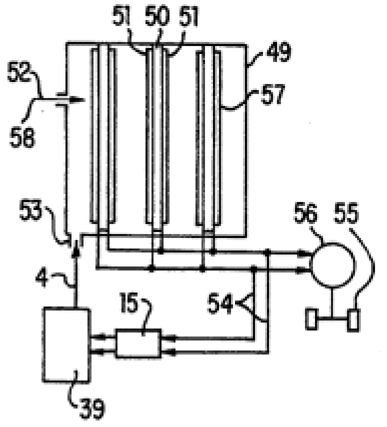

FIG.45

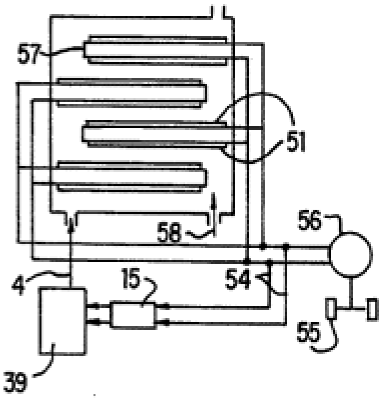

FIG. 46

FIG. 46 shows a side view of example 19;

FIG. 47 shows a side view of example 20;

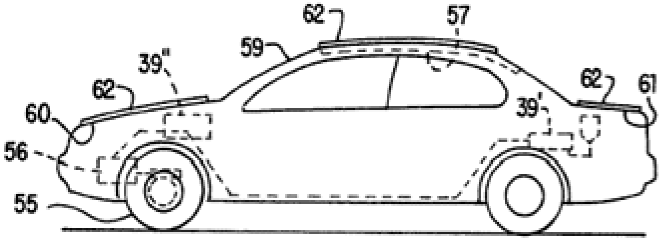

FIG. 47

DETAILED DISCLOSURE OF THE INVENTION

FIG. 2 shows the example of the invention wherein water 1 is supplied to an electrolytic bath 2 to be electrolyzed by electric current from a battery 3, the equipment being mounted on a car (not illustrated). Hydrogen 4 generated in the equipment is supplied together with gasoline to the engine, and generated oxygen 5 is released to the inside of the car.

An ion exchange resin layer 7 of replaceable construction is mounted in the outlet of a water tank 6, so that distilled water for electrolysis is not required, and ordinary tap water from a water faucet, etc. can be used. Water tank 6 is placed with the water level therein always higher than electrolytic bath 2, so that pressure is always applied to an electrolytic film 8 within the electrolytic bath 2. Water from the tank 6 enters from the bottom of electrolytic bath via a pipe 9. This accelerates the chemical reaction in the bath and decreases electrical consumption by heating, as described below cold water immediately after it is sent from below electrolytic bath instead of from above, in order to raise the temperature within the electrolytic battery as much as possible and by sending heated water within the electrolytic bath to keep a high temperature within the bath as much as possible, without enabling the water to flow back to water tank.

The water electrolysis method of the invention employs solid polyelectrolyte water electrolysis by polymer electrolysis, and does not need electrolytic liquid. This is one feature of the invention.

As shown in FIG. 2, 3, 4, 5, 6 and 7 and also as described below, the electrolytic film in the electrolytic bath 2 is a solid polyelectrolytic film 8 having a positive electrode 10 on one side and a negative electrode 11 on the other side. The solid polyelectrolytic film 8 extends vertically and is sandwiched with aperture metal plates 12, metal nets 13 and another aperture metal plates 14 symmetrically arranged on both sides of film 8. The solid polyelectrolytic film 8 is mounted to extend vertically in order to enable it to vibrate as the car or other vehicle is moved in order to easily set hydrogen foam free, to thereby accelerate the chemical reaction, to enhance the efficiency of heating from the outside of the electrolytic bath and the efficiency of heating up interior heat generating substance by making the electrolytic film thinner, not to prevent hydrogen and oxygen from rising, and also to simplify the drain on the side of positive electrode. Electricity is applied to electrodes 10, 11 of said film 8 from power supply 15 connected to battery 3 via electric cables 16.

The solid polyelectrolytic film 8 illustrated in FIG. 7 set forth above is a cation exchange film having the following chemical formula: ##STR1##

As shown in the plan view of FIG. 3 and cross section of FIG. 7, thin film electrodes 10, 11 of porous anti-corrosive catalytic metals such as platinum of platinum group, rhodium, palladium, ruthenium, iridium, etc. are applied to both sides of the electrolytic film 8.

As further shown in FIG. 7, the apertured metal plates 12 of FIG. 4 contact the electrodes 10, 11 and the layers of the metal mesh 13 of FIG. 5 are attached to the outer sides of the apertured metal plates 12. The apertured metal plates 14 of FIG. 6 are attached to the outer sides of the layers of metal mesh 13. The layers including the apertured metal plates 14, metal mesh layers 13, apertured metal plates 12, positive and negative electrodes 10. 11 and the electrolytic film 8, are fastened together with inserted packings 17 by the meshed threads 19 of an electrically insulated holder 18. The electrolytic film 8 is replaceable, if necessary, for instance every 3 years. When electricity is applied between the positive electrode 10 and the negative electrode 11 via the apertured metal plate 12, water 1 permeating to the electrolytic film 8 is electrolyzed, generating oxygen from the positive electrode 10 and hydrogen from the negative electrode 11. Hydrogen is supplied from the outlet pipe 20 at the upper portion of electrolytic bath 2 to an engine, etc. and oxygen is discharged to the cabin of the vehicle, via outlet pipe 21 located at the upper portion of electrodes.

Anti-corrosive materials such as plastic or titanium or material coated With fluoric resin are used for the electrolytic bath. In examples of the invention employing a 20 mm diameter electrolytic film, hydrogen was generated at 12.59 cc/minute with a voltage of 12 V and current of 2.5 A; hydrogen was generated at 9.98 cc/minute with a voltage of 12 V and current of 2.0 A; hydrogen was generated at 7.53 cc/minute at a voltage of 12 V and current of 1.5 A, hydrogen was generated at 5.00 cc/minute at a voltage of 12 V and current of 1.0 A; and hydrogen was generated at 2.42 cc/minute at a voltage of 12 V and current of 0.5 A.

In order to heat water within the electrolytic bath 2 shown in FIG. 2, a heat generating element 22 such as a rectifier, transistor, etc. in the circuit of the power supply 15 shown by FIG. 9, is coated with Teflon resin or sealed in titanium box 23, and mounted within the electrolytic bath 2. This arrangement is designed to heat water at the location of electrolysis and to simultaneously cool the heat generating parts of the power supply circuit. Especially when the electrolytic bath is made of plastics without using heat absorbing fins, as set forth later, this method is especially advantageous, since plastics cannot absorb external and in addition heat produced from heat generating interior substances is insulated by plastics to enhance the interior heating efficiency.

The space 24 for receiving hydrogen generated on the side of negative electrode and water permeating from electrolytic film can be discharged from the space 24 via drain valve 25.

Part 26 is a support to hold the system of the invention under the hood, etc. of an automotive vehicle, this support enabling substantial vibration of the electrolytic bath 2 with vibration of automobile.
FIG. 8 illustrates a side view of the arrangement of FIG. 2, showing that the electrolytic film 8 may be circular. With this arrangement, the device of the invention is compact since the water pipe 9 is arranged along the round side of the bath, and the absorption of heat from the external fins is not disturbed.

Solid polyelectrolyte water electrolysis by electrolytic film 8 and catalytic metallic electrode 10, 11 used for the system of the invention enables the attaining of high energy efficiency without using an electrolytic liquid, and the energy system is compact and easy to handle. As shown in FIG. 2, heat absorbing fins 27 are mounted externally on the electrolytic bath 2 to absorb heat from the engine or under the hood. The fins aid in the heating of the water within the electrolytic bath 2 by a heat generating element, so that the electrolytic voltage can be reduced by 5 to 10%. In addition this enables the release of oxygen foam from the electrolytic film 8 to be accelerated by transmitting engine and car movement vibration to the electrolytic film 8, thereby enhancing the energy generating efficiency, so that extremely high energy efficiencies as 95% can be obtained.

Hydrogen coming from the pipe 20 of the system of the invention can be supplied to the suction duct of a hydrogen engine, and is also usable for conventional gasoline automobile. In this event, if the system is mounted under the hood to send hydrogen to the intake duct of the engine, under the power of the car battery, to mix hydrogen with evaporated gasoline, fuel expense can be not only saved but is also possible to reduce C0, C02, and N0 within exhaust gas. In addition, sleepiness of the driver can be prevented, thereby enhancing attention of the driver to careful driving. By discharging oxygen coming from the pipe 21 of the system of the invention to the drivers seat in order to provide oxygen to the brain of driver.

The circuit of FIG. 9, is an example of the circuit of the power supply 15 for supplying constant current from the battery 3 to the electrolytic bath 2. The battery of the automobile is usable for supplying the input to this circuit, for example a battery having a capacity of 12 VDC at 5 A can be used, and the range of input voltages for the circuit is 10-15 V.

The output of the circuit of FIG. 9 is set with range of 0 VDC, 4 A. Lamp LED 2 is lit to shut off the output current when the output voltage exceeds DC 2.8 V by increasing of the resistance resulting from long usage of the solid polyelectrolytic film, or when the input voltage has fallen to lower than DC 10 V due to consumption of the battery and the temperature of radiator exceeds 80 degrees C. Lamp LED 3 is lit when output current is supplied.

Part U-1 in the power supply circuit is a DC/DC converter to provide an output voltage of -12 V necessary to drive the op-amp.

Part 28 of the circuit is a thermal fuse which senses the temperature in the bath to shut off the output current when the temperature of element 22 rises to more than 80 degrees C.

Element 22 in the circuit is a transistor having large heat generation. The invention serves the double purpose of enhancing electrolytic efficiency to lower the voltage by raising the water temperature within electrolytic bath 2 by using the heating property of element 22, as shown by FIG. 2, and also of cooling the transistor or other element 22 at the same time.

As shown in FIG. 19, it is also possible to heat the water by attaching radiation fins 27 to the transistor and contacting the radiation fins with the metallic electrolytic bath 2 made of such metals as titanium, etc. It is also possible to heat the water by contacting the radiation fins with the outside of electrolytic bath 2 made of such metals as titanium, etc.

FIG. 10 and FIG. 11 show an example of the invention wherein heat absorbing fins 27 are mounted to extend in the direction of the diameter of electrolytic bath 2, and water pipe 9 is inserted between the heat absorbing fins 27 so as to place the heat absorbing fins 27 on the water pipe 9 itself in order to preheat the water before it enters the electrolytic bath.

FIG. 12 shows an example of the invention wherein a plurality of electrolytic films 8 are aligned in parallel to increase the generation of hydrogen. This reason for the use of a plurality of electrolytic films is explained in the following paragraphs.

Gasoline is represented by the formula C.sub.8 H.sub.16 and if the hydrogen mixing rate is 5%, the volume of hydrogen to 1 mol (112 g) of gasoline is 112.times.0.05/ (1-0.05)=5.89 g.

Since the heat generating volume at low mixtures of hydrogen and gasoline is 10,500 kcal/kg and 28,800 kcl/kg respectively, when a 5% hydrogen mixing rate is converted to heat generating volume, hydrogen becomes 5.89.times.28.8/ (5.89.times.28.8+112.times.10.5);=12.6%.

Considering a 30% heat efficiency of the engine and approximately 10 horsepower under light load (40 to 50 km/h of constant speed on city roads), heat input at 10 horsepower’s (7.35 kw) of net output is 7.35/0.3=24.5 kw=24.5.times.860 kcal/h=21,070 kcal/h.

The supply calorie of hydrogen out of the 21,070 kcal/h is 0.126.times.21,070=2,655 kcal/h and that of gasoline is 21,070-2,655=18,415 kcl/h. When obtaining heat generating volume from 0.0899 kg/m3 (gas) of hydrogen's density and 0.74 kg/l (liquid) of gasoline's density, hydrogen is 28,800.times. 0.0899=2,589 kcal/m3 (H2 gas) and gasoline 10,500.times.0.74=7,770 kcal/m3 (gasoline). Consequently the supply volume of hydrogen and gasoline is 2,655/2,589/60=17.1 l/min and 1,841.5/7,770/60=39.5 cc/min respectively.

Assuming that one sheet of electrolytic film with a 8 cm diameter generates 50 cc/min of hydrogen, 342 sheets of the film aligned in parallel are required to supply 17.1 l/min of hydrogen to a conventional automobile engine. However, as shown in FIG. 22, in the system of the invention using a hydrogen tank 31, the number of electrolytic films as set forth above is not required, since controller 32 controls the necessary volume of hydrogen according to the condition of the engine and because, as long as the controller 32 works, hydrogen is stored in the tank to be released only when necessary.

FIG. 13 shows an example of the invention wherein a plurality of electrolytic baths are connected to a unit 31.

FIG. 14 shows an example of the invention wherein the electrolytic bath 2 is cylindrical with the electrolytic film 8 attached to its bottom. Vibration of car moves water within the electrolytic bath 2 in a vertical direction A, and power in the A direction is divided into the B direction axial of the electrolytic bath 2 and in the C direction at right angles to the axis of the electrolytic bath 2 and also in parallel with the surface of the electrolytic film 8, in order to accelerate discharging foam of hydrogen coming from electrolytic film 8 to enhance electrolytic efficiency. Heat absorbing fins 27, drain pipe 32, fixture 33, water inlet 34, ion exchange resin layer 7, hydrogen outlet 20 and oxygen outlet 21 are mounted in the electrolytic bath 2.

FIG. 15 shows an example of the invention wherein the electrolytic bath 2 is inclined and the bottom of electrolytic bath extends vertically. In this arrangement the water inlet is in an upper horizontal portion of electrolytic bath. The ion exchange resin layer and the electrolytic film are represented by the reference numerals 7 and 8 respectively. The electrolytic bath is made of non-corrosive metals such as titanium, etc. and heated semi-conductors in the power supply circuit contact the outside of electrolytic bath so that the heat of engine, etc. is transmitted through fins 27 to heat the electrolytic bath.

FIG. 16 is an example of the invention wherein the electrolytic bath, etc. are heated. Using the example of FIG. 14, heating pipe 35 is installed in the cylindrical electrolytic bath 2 to heat the water 1 by sending heat of the engine and exhaust into heating pipe 35 in order to enhance the electrolytic efficiency.

FIG. 17 shows an example of the invention wherein an electric heating wire 36 coated with Teflon resin is placed within the electrolytic bath 2 to heat water 1 by current from the automobile battery.

FIG. 18 is an example of the invention using a vertically extending tube shown in FIG. 14, wherein members 37 in the shape of trumpet horns are supported by rods 38 inserted in the water tank 1. Motion A of the water in a vertical direction due to up and down movement of car is converted to movement in the horizontal direction B to improve discharging and dispersing foam of the hydrogen gas.

FIG. 19 is an example of the invention wherein radiating fins 27 of the power supply 15 are attached along the outside wall of the electrolytic bath 2 to heat the water within the electrolytic bath 2 by heat generated from the power supply and also to cool the heat generating semi-conductors.

FIG. 20 is an example of the invention wherein the power supply 15 is fabricated on a flexible printed circuit board which is mounted around the electrolytic bath 2 to heat water within the bath and cool the power supply circuit.

FIG. 21 is an example of the invention wherein the power supply 15 is fixed on the wide bottom of the electrolytic bath 2 in the form of a cube and heat absorbing fins 27 are attached to other surfaces, so that the electrolytic efficiency can be enhanced by heat generated by the power supply and heat absorbed by fins 27 from the engine.

FIG. 22 is an example of the invention wherein the power supply 15 is mounted on a narrow longitudinal face of the electrolytic bath in the form of a rectangular parallel piped, as shown in the previous example.

FIG. 23 shows an example of the invention wherein the electrolytic bath 2 is very thin, so that the temperature of interior water is easy to raise by external heating, and the power supply 15 is set on the wide bottom of the electrolytic bath 2.

FIG. 24 shows the test results of the inventor, assuming that the abscissa and ordinate represent the necessary current and voltage and current, respectively, for electrolysis, and the curve

B shows the relationship between the voltage and current when neither heat nor vibration is provided. Curve A shows the relationship in accordance with the invention upon the application of loading pressure on the electrolytic film 8 by heating and vibrating water 1 within electrolytic bath 2. This test shows that the voltage necessary for electrolysis is reduced by at least 15% and the energy efficiency is consequently enhanced.

FIG. 25 shows an example of the invention comprised of 3 main elements of the hydrogen generating apparatus, hydrogen storing apparatus and controller which have been explained with reference to FIG. 2.

The hydrogen outlet pipe 20 from the electrolytic hydrogen generating apparatus 39 driven by the battery 3 and the power supply 15 of FIG. 2 are connected to the hydrogen tank 40, where a hydrogen storage alloy 41, such as iron plus titanium or iron plus titanium plus niobium, invented by me, is filled to efficiently absorb hydrogen. As I have explained in another of my patent applications, an alloy of iron and titanium and Niobium has a hydrogen storage capacity of 6.7 times as much as a conventional hydrogen cylinder. A controller 43 for controlling the hydrogen volume is set between this hydrogen tank 40 and the engine 42. Gasoline 44 is supplied to the engine 42 via and evaporator 45. FIG. 25 also shows the system where hydrogen is supplied from the controller 43.

The hydrogen controller 42 is designed to increase and decrease the supplied volume of hydrogen as a function of the rpm of the engine or the angle (alpha) of the accelerator pedal 46.

The hydrogen generating apparatus 39 receives heat produced by the engine or exhaust from the engine or from a supply of electricity to heat the generating parts 22 of the power source and electrolytic film 8, and produces hydrogen to be stored in the hydrogen storage alloy filled hydrogen tank 40. The hydrogen storage alloy in the hydrogen tank is cooled by water 1 in order to send hydrogen to hydrogen tank by pressure for storage.

The hydrogen storage alloy filed storage tank 40 is placed close to the engine to discharge hydrogen from the metal by heat coming from engine 42. This hydrogen tank 40 is connected to the hydrogen controller 42 which is designed to shut down hydrogen when the load to engine becomes large. In other words, the controller 43 is closed and the supply of hydrogen to the engine stops or is reduced, during which period hydrogen from the hydrogen generating apparatus is stored in the hydrogen tank. The controller, when necessary, opens to send hydrogen to the engine. Therefore, in accordance with the invention, even a small hydrogen generating capacity is enough to drive the engine, so that the system may be small. A hydrogen cylinder can be used instead of the hydrogen tank 31, or can be used along with the hydrogen tank 31.

The controller 43 changes the volume of hydrogen in proportion to the size of the load, the density of mixed gas and the size of mixing ratio.

FIG. 26 is a plane figure showing an automobile 47 incorporating the system of the invention, and also illustrating the driver 48.

In order to describe the hydrogen controller 43, the test data of the example of the invention, FIG. 27 graphically shows the relationship between the equivalent ratio of limit of hydrogen thinness .phi. and the hydrogen mixing rate f.

Hydrogen generated by this system was sent into an inlet pipe located at approximately 50 mm down from the throttle valve within the pipe or suction pipe located at approximately 150 mm up from carburettor. The stroke capacity of engine used for this experiment is 323 cc.

The equivalent ratio .phi. of hydrogen is represented by the ratio of quality and volume of oxygen necessary for complete combustion of mixed gas consisting of hydrogen and gasoline with respect to the quality and volume of oxygen within the mixed gas. The hydrogen mixing rate f is represented by comparison of quality and volume of hydrogen with quality of volume of hydrogen plus gasoline.

As clearly apparent from FIG. 27, the effect of driving capacity of thin fuel increases at lower hydrogen mixing rates and also at lower loads.

FIG. 28 shows that a thicker mixed gas is required as hydrogen in the system increases together with increases of load.

Gasoline engines can be driven only by thin mixed gas of not more than approximately 1.2 times as much as generally theoretical gas volume. Therefore the output at low driving speed is controlled by throttling the volume of both the fuel and air. However, since the driving limit of thin mixed gas is expanded when adding hydrogen by this system, it is possible to control the output by decreasing only the volume of fuel without throttling air, to decrease any damage to the pump by throttling the volume of sucked air and to enhance the heat efficiency, i.e. one of effects of the present invention.

This effect becomes more remarkable with lower output of driving with thin mixing ratio, and also the addition of hydrogen when driving with thin mixed gas makes it possible to decrease the combustibility of hydrocarbon HC, CO, etc. On the other hand, when driving with a thick mixed gas near the theoretical mixing ratio (high output driving), the effect of the addition of hydrogen is lower, and when increasing the mixing ratio of hydrogen, the output adversely lowers, leading to increase in exhaust of NOx. Consequently, the addition of hydrogen is recommended for partial load driving, and driving with gasoline only is better for high load driving.

Consequently, as explained with reference to FIG. 25, I have provided a system having a hydrogen controller 43.

The effect of mixing hydrogen into the fuel when driving with a thin gas mixture is especially effective, and the preferred hydrogen mixing rate is 5 to 10%. The smaller that the flame speed is when using a thin mixed gas of gasoline and air, the more effective flame transmission is accelerated by mixing small hydrogen with the fuel, for which the present controller is effective.

When using gasoline only, the ignition advance angle, which is referred to herein as the MBT (Minimum Advance for Best Torque) increases in proportion to the rotating speed of the engine, but the degree is reduced by mixing hydrogen with the fuel. It has been found by experiment that in the case of a highspeed rotation there is a trend that the effect of mixing hydrogen is large until the hydrogen mixing rate is large.

If gasoline in a thin mixed gas at constant equivalent ratio continues to be partially replaced with hydrogen, it is possible to delay the ignition time for MBT, and the output increases when the hydrogen mixing rate is small.

When maintaining a constant rotation speed, it is possible to make the equivalent ratio substantially smaller under no-load conditions, hardly changing the ignition time for MBT together with increasing hydrogen mixing ratio. With mixed gas required by the output, the smaller its equivalent rate is, the larger the hydrogen mixing effect is.

If hydrogen is mixed with mixed gas of gasoline and air, combustion speed increases and the relationship of the hydrogen mixing rate with combustion speed shows an almost straight tendency. For instance, the regular combustion speed of thin mixed gas having a 0.7 equivalent rate at a hydrogen mixing rate of 0.2% and 10% is 20.25 cm/s and 40 cm/s respectively, having an almost straight relationship. The effect of mixing hydrogen on the combustion speed is more remarkable as the mixing rate becomes smaller, showing a logarithmic change with the mixing rate.

Hydrogen mixing accelerates the effect of increasing combustion speed, particularly by turbulence of thin mixed gas. Increase of combustion speed in turbulent flow by mixing hydrogen on the side of excessive density of hydrogen having approximately 1.3 of equivalent ratio.phi. shows an almost straight relationship as well as an increase in regular combustion speed, and hydrogen combustion speed on the side of thin density of hydrogen increases greatly by mixing approximately 2% hydrogen. The reason why the effect of turbulence on combustion speed increases greatly on the side of thin density by adding small amount of hydrogen is that the molecule dispersion coefficient of hydrogen is so extremely large that hydrogen disperses on the surface of irregular disordered combustion and selects oxygen to burn. On the basis of observations when using a burning vessel, it has been confirmed that the irregular surface of flame becomes very fine by mixing hydrogen. Consequently, when using this mixed gas, effective transmission of flame is accelerated more and more in case of thin mixed gas and of lower mixing ratio of hydrogen. Delaying MBT ignition timing is due to not only the effect of hydrogen having a high combustion speed, but also to the effect as set forth above.

The effect of the invention on the density of air pollution materials contained in engine exhaust results in making possible the driving of cars at fully low equivalent rate of NO density compared with gasoline, only by mixing hydrogen into thin mixed gas.

FIG. 29 shows the measurement of ignition time for MBT when driving by adding hydrogen to gasoline, and it is indicated that the ignition time for MBT is greatly delayed by adding a small amount of hydrogen.

FIG. 30 shows the effect on NO density when changing the ignition timing at constant rotation speed and equivalent rate by 5 degrees and 10 degrees before and after from MBT, and the effect of the invention wherein it is possible on lowering NO density by delaying the ignition timing.

FIG. 31 shows the relationship between NO density and decreasing rate of average effective pressure according to ignition delaying angle from MBT, and it indicates the effect wherein mixing hydrogen in accordance with the invention has a large effect on lowering NO density compared with the output decrease by ignition delaying angle. Furthermore, it is the effect of the invention that, when using thinner mixed gas, mixed hydrogen is also advantageous in the NO exhausting rate (g/ps.h).

FIG. 32 shows that the NO exhaust rate is decreased by increase in the value of Gh/Gg. Compared with driving with gasoline of .lambda.=1.0, when driving with .lambda.=1.3 and adding hydrogen, the NO exhaust rate is decreased to approximately 1/4.

FIG. 33 shows the indicated horsepower of ignition timing, HC within the exhaust gas, CO and the effect on NO exhaust rate. The HC exhaust rate become less with increases in the added volume of hydrogen, and it slightly increases when delaying ignition time.

The reason that HC exhaust is decreased by adding hydrogen is that the flowing volume of gasoline decreases by adding the volume of hydrogen, inasmuch as the excessive air ratio . lambda. is kept at constant level, and that combustion efficiency around the wall of combustion chamber is accelerated since the hydrogen's lame distinguishing distance becomes small at the same time as the rise of maximum pressure. (see FIG. 42.)

The C0 exhaust rate also shows a similar tendency as the HC exhaust rate but is hardly dependable on ignition time. The NO exhaust rate sharply decreases when delaying the ignition time. The NO exhaust rate at the same ignition time increases as the value of Gh/Gg increases, since the combustion speed increases by adding hydrogen and the temperature of combustion of the gas increases.

FIG. 34 shows the fluctuation of the HC exhaust ratio when changing the excessive air ratio. When approaching the condition of discontinuing combustion, the HC exhaust ratio’s seen to sharply increase. When the excessive air ratio is increased, there is trend for the HC exhaust ratio to increase, but it is possible to protect the increase in HC exhaust by increasing the Gh/Gg value.

FIG. 35 shows the effect of changes in HC density within the exhaust by the equivalent ratio, using the hydrogen mixing rate of the invention as a parameter, and it indicates the effect of the invention that it is possible to control the increase in HC density until the thin side of mixed gas by mixing hydrogen according to the invention. This figure shows the effect of the invention that, when thin mixed gas having equivalent ratio .phi. of approximately 0.75, HC density and HC exhaust rate substantially decreased by mixing hydrogen in accordance with the invention.

FIG. 36 shows the CO exhaust rate when adding hydrogen. The absolute value of CO exhaust rate is small.

Conventional hydrogen mixing methods cannot keep the HC density at a low level when using a thinner mixed gas as shown by FIG. 35, unless a substantially large volume of hydrogen is mixed. Therefore, conventional hydrogen mixing methods cannot control the HC density to be low, whereas the method of the invention has the effect of keeping HC at its lowest level in any case, since it automatically adjusts the volume of hydrogen according to the curve shown in FIG. 35.

FIG. 37 shows an example of measurement of the CO density within the exhaust, and it indicates the effect of the invention wherein in case of thin mixed gas having equivalent ratio .phi. of less than 0.9, the CO density lowers upon mixing hydrogen according to the invention. As the mixed gas becomes thinner, it is usual for the cycle change to increase by discontinued combustion or drop of the combustion speed, but safe driving with thin mixed gas can be obtained by mixing hydrogen according to the invention, and the change in the cycle decreases.

FIG. 38 shows the distribution of the frequency of maximum pressure wherein the range of fluctuation is large when using only gasoline having equivalent ratio .phi. close to 1, but it indicates the effect that mixing hydrogen in accordance with the invention makes the range of fluctuation small. When using only hydrogen in accordance with the system of the invention, safe driving with regular dispersion can be obtained even with mixed gas close to driving limit of thin gas.

Decreasing the ratio of maximum pressure fluctuation by mixing hydrogen does not change as much by equivalent ratio, and the invention has the large effect that fluctuation decreases to almost half at 10% mixing. The lower the gas suction pressure is, the bigger fluctuation ratio is, but the effect of mixing hydrogen in accordance with the invention is also large. When using gasoline only, the fluctuation ratio does not change as much with rotation speed. At a high speed with thin gas the invention has the effect that the fluctuation ratio is greatly reduced by mixing hydrogen therein in accordance with the invention.

As a measure to stabilize driving with thin mixed gas, there is a method using simultaneous ignition at two places. The method of the invention has the same effect when using two plugs as when using a single ignition plug.
The excessive air ratio (.lambda.) when adding hydrogen to gasoline by the invention is: ##EQU1## wherein the flowing volume of air is Ga, the flowing volume of hydrogen in accordance with the invention is Gh, the flowing volume of gasoline is Gg and theoretically the combustion rate of gasoline and hydrogen added by the invention is .phig and phih.

The calorie Q (kcal/s) per unit of time of fuel supplied to the engine is:
Q=gh Gh +gg GG provided the heat generating amount of hydrogen added by the invention and gasoline per unit of volume are g.sub.h and g.sub.g, respectively.

FIG. 39 is a manometric diagram showing the development of pressure within the cylinder when changing the value of Gh/Gg while keeping the air excessive ratio .lambda. and the ignition time constant. It is seen from FIG. 39 that, when increasing the ratio of flowing volume of hydrogen and gasoline (Gh/Gg), the time from ignition until reaching maximum pressure becomes short and the maximum pressure increases. On this occasion, as seen clearly in FIG. 3, a change in supplied calories Q/Q' is approximately 1.02 even at Gh/Gg=0.1, and it is considered that its effect hardly appears. Consequently, the difference by adding hydrogen as shown at FIG. 39 means mainly an increase in combustion speed.

FIG. 40 shows the relationship between the excessive air ratio and Gh/Gg. with ignition time for MBT, and it is apparent from FIG. 39 that if Gh/Gg is increased at the same value of excessive air ratio, the ignition time for MBT is delayed (approaching TDC). This fact agrees with the result of the manometric diagram (FIG. 39) that it is conserved for combustion speed to increase, when increasing added volume of hydrogen. In addition, the expansion of discontinued combustion limit 6 based on adding hydrogen is clear from this figure.

FIG. 41 shows the temperature of the exhaust measured approximately 150 mm below the exhaust valve using a thermoelectric couple. Since the exhaust valve is not kept perfectly warm, the absolute value is meaningless, but when compared relatively, a decrease of temperature is seen when adding hydrogen and corresponds to the tendency shown by FIG. 39. The standard deviation .sigma.sub.p and .delta..sub.p of maximum pressure within the cylinder when adding hydrogen is shown in FIG. 42. When the value of Gh/Gg is increased, both .sigma..sub.p and .delta..sub.p decrease, which means that the combustion within the cylinder has been stabilized. This phenomena is considered to be due to the large dispersion coefficient of hydrogen and to combustion characteristics as set forth previously. The indicated horse power at ignition time for MBT is shown in FIG. 43. When Gh/Gg=0, which means using gasoline only, combustion discontinuance occurs at an excessive air ratio of 1.2, and the indicated horsepower sharply f11s. When Gh/Gg=0.05, it was possible to drive until an excessive air ratio .lambda. of 1.4, but discontinuance of combustion occurred at an excessive air ratio of 1.5. When Gh/Gg=0.15, it was impossible to keep G.sub.a =3.0.times.10.sup.-3 kg/s due to the increase in the flowing volume of hydrogen. In FIG. 43, the indicated horsepower generally decreases with increase in the value of excessive air ratio, but if the supplied calories are inversely proportional to excessive air ratio .lambda. and the indicated thermal efficiency are fixed at one point FIG. 43, as shown by the chain line, and the decreasing ratio of the test result is less than this. An increase of the supplied calories by adding hydrogen is approximately 3% at Gh/Gg=0.15, and also in the case of hydrogen, a decrease in the mole number by combustion occurs, which is a contrary effect. Therefore, these influences are regarded as small. At the point obtained by experiment, there is almost no difference in Gh/Gg between 0.05 and 0.15. Consequently the reason why the experimental point comes above chain line at one point is considered to be an enhancement of the indicated heat efficiency.

FIG. 44 shows the change in indicated heat efficiency .eta..sub.i when changing Gh/Gg and the excessive air ratio. It is impossible to compare this directly with the conditions of FIG. 43 because of the different adding time, but the enhancement of indicated heat efficiency with increases in excessive air ratio is definite, except for the range of decrease in indicated heat efficiency by imperfect combustion at the time when the combustion is about to discontinue. This is why it is considered that when approaching air cycle cyan increase in excessive air ratio, thermal loss decreases upon a fall of the combustion temperature. Moreover, the theoretical thermal efficiency .eta..sub.th of the auto-cycle of air only under the conditions of this experiment is approximately 47%.

FIG. 45 illustrates an example of applying the system of the invention to an electric automobile.

Film 50 has holes and is sandwiched between two plastic film plates 51, and film 50 is fixed in box 49. The platinum plates serve as electrodes, and the air at room temperature freely enters through the hole 52. When hydrogen from the hydrogen generating apparatus 39 is supplied from hole 53 and exposed to gas mixed with oxygen within the air, one electrode produced a voltage of 1 V. If N volts are required, N electrodes are mounted in the box. Since a thin electrode, like a micro chip, has high energy efficiency, it is possible for an electrode weighing 1 kg. to produce electric power of 1 kw. Part of the electric power serves as a supply source of power supply circuit 15 for the energy system of the invention via 54, and most of the electric power is supplied to the motor 56 for driving the wheels 55 of automobile. An apparatus incorporating this film fuel battery and hydrogen generating apparatus into one unit is also contemplated by the invention.

FIG. 45 shows an example of the invention wherein fuel batteries are placed sideways (horizontally). FIG. 46 shows an example of the invention wherein fuel batteries 57 are placed longitudinally and hydrogen 4 and air 58 are fully used when rising to contact the electrodes 51.

FIG. 47 shows an example of the invention comprising an electric automobile wherein solar batteries are attached to the outside of the roof 59 and the upper side of hood 60 and trunk lid 61. The hydrogen generating apparatus 39 is fixed at the rear portion 39' or front portion 39" within the car, and the film batteries 57 are attached to the inside of roof 59. Electric power is obtained by supplying to the film fuel battery 57 hydrogen produced by the hydrogen apparatus 39 and by electric power generated from the solar batteries operating by sun light, together with air. The electric power together with part of electric power from solar battery 62 is supplied to the motor 56 driving the wheels 55.

The outlet pipe 20 of the system is fixed within the suction pipe of a ready-made gasoline engine to cause the following effects:
1-(1) The limit of discontinuance of combustion, with thin fuel density is increased. The invention has the effect that the equivalent ratio of the limit in driving with thin fuel can more effectively be reduced as the load decreases.

1-(2) The invention has the noticeable effect that it is possible to adequately increase combustion speed of the engine and accelerate the speed of combustion of thin mixed gas on turbulent flow under the condition that the mixed gas is thin and mixing rate is small.

1-(3) In accordance with the invention, the maximum pressure within the cylinder rises, the ignition time for MBT is delayed, the exhaust temperature falls, the drop of indicated horsepower is less when increasing the air excessive ratio, and the indicated heat efficiency is enhanced.

1-(4) The invention has the effect that, when less than an equivalent rate of 1, the NO exhaust ratio at the lag angle of ignition decreases in comparison with the case when using gasoline only, even at same equivalent rate. The NO exhaust decreases at an ignition time for MBT of 1.0 to 1.1.

1-(5) The invention has the effect that it is possible to lower the HC exhaust ratio at a rarefied area. Because of its expanded limit in discontinuance of combustion, the HC exhaust can control a sharp increase on the rarefied side of fuel. The C0 exhaust is the same as the HC exhaust. As a result of driving at an air excessive ratio equal to or exceeding 1.0, the absolute value becomes low. The HC exhaust can prevent sharp increases of HC exhaust around the discontinuance of combustion with the value of excessive air ratio.

1-(6) CO exhaust does not increase sharply around the same discontinuance of combustion as the HC exhaust. As a result of driving at an excessive air ratio equal to or exceeding 1.0, the absolute value of the CO exhaust ratio is extremely low.

1-(7) There is the effect that the cycle fluctuation ratio decreases in accordance with the invention and it decreases to approximately half at a 10% mixing ratio, resulting in an increase of the maximum pressure and a delay of MBT ignition time.

1-(8) The rising ratio of pressure within the cylinder increases by adding hydrogen and the maximum pressure increases. In addition, the MBT ignition time is delayed.

1-(9) The exhaust temperature decreases when hydrogen is added.

1-(10) It is possible to expand the limitation in discontinuance of combustion in a large range of excessive air ratios by adding hydrogen. If the excessive air ratio is increased, the indicated heat efficiency is enhanced.

1-(11) In order to decrease composition of air pollution exhausted from an automobile engine, a rarefied combustion method has been tried, but an engine for using this method is complicated in comparison with a conventional engine. The invention is an epoch making one which can realize low environmental pollution without changing the construction of conventional automobiles and engines.

1-(12) Hydrogen has a wide combustion range, high combustible speed, lower ignition energy and is adaptable to more easily making uniform mixed gas, as compared with gasoline. Therefore, the invention is an epoch making one which can realize the combustion of thin mixed gas and decreases in exhausting nitric oxide by making use of these properties.

1-(13) Since the system of the invention adequately controls the volume of hydrogen according to the size of load, thinness of mixed gas, size of mixing ratio and ignition time for MBT, it has the maximum effect on non environmental pollution and fuel saving.

1-(14) The system of the invention, when assembling a controller, hydrogen generating apparatus and hydrogen tank, can make a hydrogen generating apparatus that is smaller and lighter than usual.

1-(15) Even when using mixed gas close to limit of driving with thinned gas, safe driving similar to those when using normal distributed gas, can be obtained with the invention.

1-(16) In addition to the effects when applying the invention to conventional gasoline engine as set forth above, the invention can eliminate air pollution, especially in the use of current diesel engine trucks, particularly with respect to exhaust gas discharged when driving at low speeds within a city, without changing the construction of the diesel engine truck.

In addition to the advantages of the invention set forth above, the effect of the invention is:

1. It is possible to make an automobile driven by hydrogen only, instead of mixing the hydrogen with gasoline, i.e. an automobile driven by water.

2. In accordance with the invention it is possible to drive a motor bicycle, vessel, jet airplane, rocket (solar battery is used for power source and water is obtainable from space) and also to an operate electric power generator, aluminium refinement, furnace, iron manufacture, burner, etc. by using water.

4. Since energy that has a clean exhaust can be obtained, such problems as the exhaust gas of automobile and exhaust materials from atomic power generation do not occur.

5. A particular liquid such as an electrolytic liquid is not required and regular water is usable. Therefore, water is obtainable from water taps and there is no need of going to a gas station.

6. The energy converting ratio is as high as 95%

7. Since the system is small and light and it is also operated by battery and portable, it can be placed in small space such as under the hood of an automobile, and is usable for conveyances such as automobiles.

8. Oxygen obtained together with the hydrogen can not only improve the cabin environment of automobile, etc. but can also prevent traffic accident by preventing the sleeping of the driver and by improving the driver's attentiveness.

9. The invention quickly takes away produced foam of hydrogen from film 8 when driving the car or engine, and also by placing the water tank 6 at a high position, and the method of connecting pipe 9 so that pressure of water on electrolytic film is increased. Therefore, permeation of water 1 into electrolytic film 11 is accelerated and the electrolytic effect is larger than publicly known.

10. Since the invention can heat water with the semi-conductors used for the power source and at the same time cool semi-conductors, it is superior in efficiency and reduces the size of the apparatus.

11. A rise in water temperature does not flow backward to the side of water tank but is concentrated on the side of electrolytic film only. Consequently, the water temperature can rise effectively with less energy.

12. It is possible for the operating voltage to be controlled to be 10% lower by increasing the water temperature.

13. Electric cars, etc. superior in efficiency can be made by the system of the invention, in combination with the film battery set forth above.

The invention has an ideal effect as a new energy source and is a revolutionary one, providing the same influence as the industrial revolution caused by James Watt's steam locomotive.
In addition to the above, the invention may be employed with a methanol car, a solar cell car, and electric car, a CNG car, a hydrogen car, a gas turbine car, a Sterling cycle engine, a hydro car (electric+diesel), and a car jointly using LPG, etc. Variations other than mentioned above are contemplated and considered to be within the scope of the invention.
While the invention has been disclosed and described with reference to a single embodiment, it will be apparent that variations and modification may be made therein, and it is therefore intended in the following claims to cover each such variation and modification as falls within the true spirit and scope of the invention.

4.0.4.0. Pacheco Francisco; US #: 5,089,107; February 18, 1992; Cl. 204/230

Pacheco; Francisco + (60 Princeton Rd., P.O. Box 169, Hewitt, NJ 07421)

Mr. Pacheco fuhr 9 Stunden lang ein 8 m langes Boot mit Meerwasser als „Brennstoff“. Mehrere Tests im Jahre 1979, jeweils von verschiedenen unabhängigen Labors, bestätigten die Funktionsweise.

Mr. Pacheco schickte Briefe an 30 Elektrizitätswerke und an 100 US-Senatoren – keine Antwort. Der Ingenieur einer Ölfirma sagte, es verstoße gegen die Firmeninteressen, dieses System zu entwickeln. Vor seinem Tod 1992 hatte Pacheco Prototypen gebaut, die mehrere Maschinen antrieben.

His system is an autoelectrolytic hydrogen generator system with magnesium and aluminium plates of sacrificial elements as anode, stainless steel as cathode, non-conductive permeable separators and sea water as electrolyte.

Production of hydrogen in situ and on demand by connecting a variable resistor external to the cell do develop a voltage and a controlled current in the cell – and thereby evolving hydrogen, autoelectrolytically and electrochemically from the electrolyte.

Surplus energy of the system applied to an optional electrolyzer produce additional hydrogen at its two sacrificial aluminium electrodes.

Bi-Polar Auto Electrolytic Hydrogen Generator

An autoelectrolytic hydrogen generator system constituted by one or a plurality of similar cells wherein a galvanic arrangement of magnesium and aluminium plates of sacrificial elements as anode; stainless steel as cathode and sea water as electrolyte, by its very nature is made to develop a voltage when connected in short circuit causing a current to flow within the system and hydrogen production of hydrogen in situ and on demand by the electrolytic action at one pole, the cathode, and additional hydrogen by the electrochemical reaction at the other pole, the anode. Surplus electric energy of the system applied to a optional electrolyser will also be made to produce additional hydrogen at its two sacrificial aluminium electrodes.

BACKGROUND OF THE INVENTION

This invention relates in general to the production of electrolytic hydrogen from a suitable electrolyte: sea water, tap water sodium chloride solution or brine, particularly as a prime object to

a technique that evolves hydrogen 99.98% pure at both electrodes of an electrolysis cell in which the arrangement and function of such electrodes are integrant parts of the invention.
In the electrolysis of brine or sea water, chlorine is produced at the anode, hydrogen together with sodium hydroxides at the cathode, i.e. "Dow cell".

Increasingly large amounts of hydrogen are used in industrial processes and actually as propeller fuel for space vehicles and in recent years is being recognized as the ideal one for automotive and other engines as well as utility fuel, inasmuch as its combustion with oxygen produces pure steam instead of pollutants, and with air minimal controllable emission of nitrogen oxides. While the proposed use of hydrogen for the above purposes is subject of many technical papers, actually, besides the NASA program there is not widespread commercial use of the concept, experimental work in projects to power automobiles fuelled by hydrogen were and are actually performed in this Country, Europe and Japan, while every one demonstrated the excellence of the gas as energy carrier and its superior performance, in all cases hydrogen was and is supplied by the following methods:

1 RESSURIZED
2 LIQUEFIED
3 STORED IN METALLIC HYDRIDES

The major factor that actually precludes the use of the gas hydrogen as automobile fuel or for that matter as utility fuel is that beside the problems of storage an delivery, the cost of production with the known techniques in amounts equivalent in terms of BTU's of energy, exceeds greatly the cost of conventional fossil fuels, even considering the fact that weight by weight, hydrogen is three times more powerful than gasoline.

The invention's disclosure will lead to the evidence that the cost of hydrogen will be appreciably reduced inasmuch as it is evolved at both electrodes, cathode and anode of the generator. The invention represents the solution of storage and delivery problems since the gas is produced in situ and on demand as described further, also represents a radical departure from the conventional electrolysis of sea water or brine and its results.
The electrolysis cell described in drawing (1) consists of: 1--CATHODE, the stainless-steel lining of the plastic vessel and its permanently connected twin stainless steel plates between the anode banks. 2--ANODE BANKS, consisting of an arrangement of magnesium plates (key element of the system), permeable separators and aluminium plates. 4--The sea water as the electrolyte.
By its nature the cell as described above, is also a galvanic arrangement of elements that makes of it a source of electricity with a nominal 1.5 volts as difference of potential in open circuit at its plus and minus terminals and a negligible chemical reaction between magnesium and the electrolyte.
Referring to a single cell; when a variable load closes the circuit, an electric current flows trough the system, current that is inversely related to the load resistance and directly to the surface of the electrodes. The electric energy causes the magnesium anode to produce chlorine, the chemical reaction of the magnesium with the electrolyte produces hydrogen that is liberated at this electrode (anode). Hydrogen and sodium hydroxides are produced by electrolysis at the stainless steel cathode, the hydrogen is liberated at this electrode (cathode); the aluminium component of the anode slowly at first, reacts also chemically with the sodium hydroxides

produced, and the resultant hydrogen increases the total output. It is not well understood, other than by speculative theory (time element?), the action of the permeable separator between the metals magnesium and aluminium, however and being incontrovertible the fact that it causes to be produced an excess of hydrogen above the predictable quantities produced by electrochemical reactions, this fact is disclosed and incorporated as principal and very important part of the invention.

The system produces analytically tested, hydrogen of 99.98 percent purity being evolved at the two electrodes with no traces detected of chlorine. Also as by-products the cell produces magnesium and aluminium hydroxides that when recuperated from the system, represent the stock material industrially obtained from sea water and bauxite as first step in the industrial production of the mentioned elements, magnesium and aluminium.

SUMMARY OF THE INVENTION

In view of the foregoing it is the main object of this invention to provide an autoelectrolytic hydrogen generator making use of 30% of the total electric energy employed to industrially produce the elements magnesium and aluminium from sea water and bauxite, the invention makes use of such elements as an ideal and fully charged electric storage system.

More particularly it is an object of this invention to provide a hydrogen generator of the above identified type wherein the electric energy obtained by the arrangement of magnesium and aluminium as sacrificial metals is exploited to evolve electrolytic hydrogen at one electrode and electrochemical reactions to produce also hydrogen at the other electrode.

Also an object of the invention is to provide a system eliminating the problem of hydrogen storage inasmuch as the so far disclosed arrangement of the metals will produce hydrogen directly from sea water, its natural storage as electrolyte, only on demand and in situ thus effectively eliminating consequent expenses and hazards that are related to hydrogen stored under pressure or in liquid form.

Still another object of the invention is to provide a system in which the voltage generated in one or more cells wherein hydrogen is being produced electrochemically also serves to effect electrolysis in these cells and in a optional electrolyser to increase the total volume of hydrogen output.

Briefly stated, these objects are attained in one basic embodiment of the invention wherein a voltaic sell constituted by magnesium-aluminium sacrificial anode, a stainless steel cathode and sea water as electrolyte is provided with an external flow loop and a pump powered by the cell surplus electric energy to: 1--circulate the electrolyte. 2--filter the same to separate it from the metal hydroxides. 3--to utilize the thermal output of the system in an independent heath exchange coil.

In another embodiment of the invention, to a plurality system of said basic cells an optional, conventional electrolyser is attached at, wherein the surplus electric energy of the system is applied and additional electrolytic hydrogen produced also at both electrodes made of aluminium.

OUTLINE OF THE DRAWING

For a better understanding of the invention as well as other objects and further features thereof, reference is made to the detailed description and read in conjunction with the included drawing wherein:

FIG. 1 is a schematic diagram of the basic embodiment of the invention, and

FIG. 2 is a schematic diagram of a preferred embodiment of the invention.

DESCRIPTION OF THE INVENTION

First embodiment: Referring now to FIG. 1, there is shown a basic hydrogen generating cell in accordance with the invention in which sea water as electrolyte is contained in a tank 10 fabricated of a high strength non-reactive plastic material, the internally stainless steel tank lining 11 and the permanently connected twin plates 12 of the same metal constitutes the cathode. The cover 13 of the tank 10 includes a gas outlet 14 and the terminals 15A, 15B (-) and 16 (+). Immersed in the electrolyte and supported within the tank 10 are the plates of magnesium 17 and aluminium 18 together with the separator 19, an arrangement that constitutes the anode. External terminals of magnesium and aluminium to be connected when operating the cell. Since the cell generates the electric energy for the electrolysis, the cell operates as an auto-electrolysis device requiring no external energy source.

Second embodiment: The arrangement in FIG. 2, shows a group of hydrogen generator cells 1, 2, 3, and 4. identical in every detail as described in the first embodiment that are located within a plastic tank 20 with three partitions 21, 22, and 23 and provided with electrolyte circulating ports such as 21A and 21B.

In closing the circuit onto itself, the cells 1, 2, 3, and 4, connected in series, will develop about four times the voltage of a single cell.

An external flow loop 24 may be coupled to the tank 21 including a strainer 25 and a pump 26 that powered by the voltage derived from the system will separate the insoluble hydroxides from the electrolyte.
As disclosed, the four
cells electric energy output may be utilized to operate as an integrant part of this embodiment an optional electrolyser cell 27 that will evolve additional hydrogen also at both electrodes 28 and 29, being these electrodes made of aluminium. A manifold 30 is provided to discharge the total volume of hydrogen produced by the system.

While there has been shown preferred embodiments of the invention, it will be appreciated that many modifications and changes may be made without, however, departing from the essential spirit of the invention. For example, utilizing the electric energy developed by the system, the nature of the electrolyte and elements of the electrodes 28 and 29, of the electrolyser cell 27. proper and known changes can be achieved.

4.0.4.1. Puharich Henry K. US Patent; #: 4,394,230; (July 19, 1983);

Rte. 1, Box 97, Delaplane, VA 22025);

Andrija Puharich found that water, when bubbled at a current of 600 cycles peer second, had the highest efficiency of disruption to the gaseous state.

For comparison: John Keely stated that water could be disrupted at 610, 620 and 12'000 cps...with the most effective frequency being 42.8 kHz.

Die Wassermoleküle werden mit komplexen gepulsten Frequenzen angeregt, die auf die Resonanzfrequenz der geometrischen Tetraeder-Form der Wassermoleküle abgestimmt sind. Die Frequenzen liegen im Hörbereich zwischen 20 bis 200 Hz und sind auf eine Trägerfrequenz zwischen 200 Hz und 100'000 Hz Amplituden massig auf moduliert. Dabei wird die Impedanz des Ausgangssignales laufend an die Last (Wasserdurchgangswiderstand) angepaßt. Die Zyklusrate von 3 Sekunden korrespondiert mit der nuklearen Kernspin-Relaxationszeit des Wassers.
Genaue chemisch-analytische Berechnungen des Autors ergaben für das System **eine Effizienz von 114,92 %,** das heißt, die via Elektrolyse erzeugten chemischen Produkte haben einen Energieinhalt, der 15 % über der aufgewendeten elektrischen Energie liegt.

Die Erklärung für dieses Phänomen liegt darin, daß die Elektrolysezelle die „Mehrenergie“ aus der Umgebungswärme aufnimmt, um sich auf konstanter Temperatur zu halten (das heißt, es fließt Wärme von außen in das System hinein). Es handelt sich bei diesem Verfahren also um eine Art Wärmepumpe, das heißt, die „Eingangsenergien“ sind elektrische Energie + „frei“ gelieferte Wärme von der Umgebung, die Ausgangsenergie ist die chemische Energie der gespaltenen Produkte Wasserstoff und Sauerstoff.

Rein theoretisch läßt sich per Elektrolyse eine Effizienz von etwa 120% erreichen (praktisch mit Gleichstrom natürlich nur etwa ¼ davon). Siehe hierzu: Penner, S.S. and L. Icerman, ENERGY, Vol. II, Non-Nuclear Energy Technologies. Addison-Wesley Publishing Company, Inc. Revised Edition, 1977, Reading, Mass. Page 140 ff.

Text der original Patentschrift

Method & Apparatus for Splitting Water Molecules

Disclosed herein is a new and improved thermodynamic device to produce hydrogen gas and oxygen gas from ordinary water molecules or from seawater at normal temperatures and pressure. Also disclosed is a new and improved method for electrically treating water molecules to decompose them into hydrogen gas and oxygen gas at efficiency levels ranging between approximately 80-100%. The evolved hydrogen gas may be used as a fuel; and the evolved oxygen gas may be used as an oxidant.

BACKGROUND OF THE INVENTION

The scientific community has long realized that water is an enormous natural energy resource, indeed an inexhaustible source, since there are over 300 million cubic miles of water on the earth's surface, all of it a potential source of hydrogen for use as fuel. In fact, more than 100 years ago Jules Verne prophesied that water eventually would be employed as a fuel and that the hydrogen and oxygen which constitute it would furnish an inexhaustible source of heat and light.

Water has been split into its constituent elements of hydrogen and oxygen by electrolytic methods, which have been extremely inefficient, by thermo chemical extraction processes called thermo chemical water-splitting, which have likewise been inefficient and have also been inordinately expensive, and by other processes including some employing solar energy. In addition, artificial chloroplasts imitating the natural process of photosynthesis have been used to

separate hydrogen from water utilizing complicated membranes and sophisticated artificial catalysts. However, these artificial chloroplasts have yet to produce hydrogen at an efficient and economical rate.
These and other proposed water splitting techniques are all part of a massive effort by the scientific community to find a plentiful, clean, and inexpensive source of fuel. While none of the methods have yet proved to be commercially feasible, they all share in common the known acceptability of hydrogen gas as a clean fuel, one that can be transmitted easily and economically over long distances and one which when burned forms water.

SUMMARY OF THE PRESENT INVENTION

In classical quantum physical chemistry, the water molecule has two basic bond angles, one angle being 104°, and the other angle being 109°28'.

The present invention involves a method by which a water molecule can be energized by electrical means so as to shift the bond angle from the 104°.degree. configuration to the 109°.degree.28' tetrahedral geometrical configuration.

An electrical function generator (Component 1) is used to produce complex electrical wave form frequencies which are applied to, and match the complex resonant frequencies of the tetrahedral geometrical form of water.

It is this complex electrical wave form applied to water which is contained in a special thermodynamic device (Component II) which shatters the water molecule by resonance into its component molecules --- hydrogen and oxygen.

The hydrogen, in gas form, may then be used as fuel; and oxygen, in gas form is used as oxidant. For example, the thermodynamic device of the present invention may be used as a hydrogen fuel source for any existing heat engine --- such as, internal combustion engines of all types, turbines, fuel cell, space heaters, water heaters, heat exchange systems, and other such devices. It can also be used for the desalinization of sea water, and other water purification purposes. It can also be applied to the development of new closed cycle heat engines where water goes in as fuel, and water comes out as a clean exhaust.

For a more complete understanding of the present invention and for a greater appreciation of its attendant advantages, reference should be made to the following detailed description taken in conjunction with the accompanying drawings.

DESCRIPTION OF THE DRAWINGS

FIG. 1 is a schematic block diagram illustrating the electrical function generator, Component I, employed in the practice of the present invention;

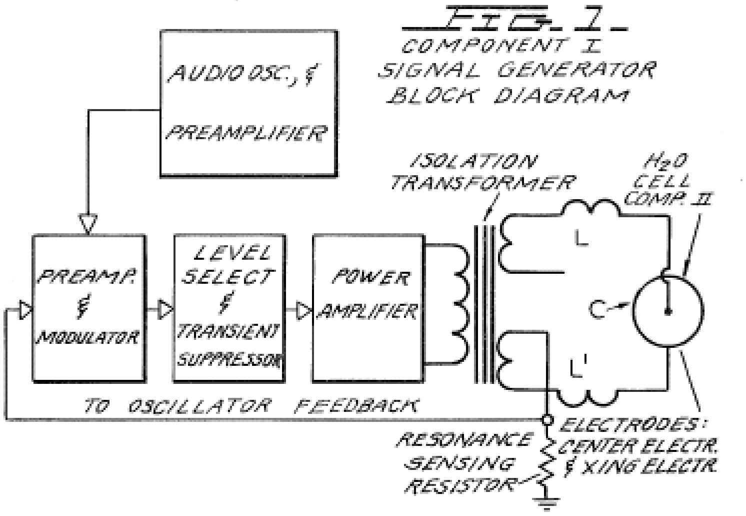

FIG. 2 is a schematic illustration of the apparatus of the present invention, including a cross sectional representation of the thermodynamic device, Component II;

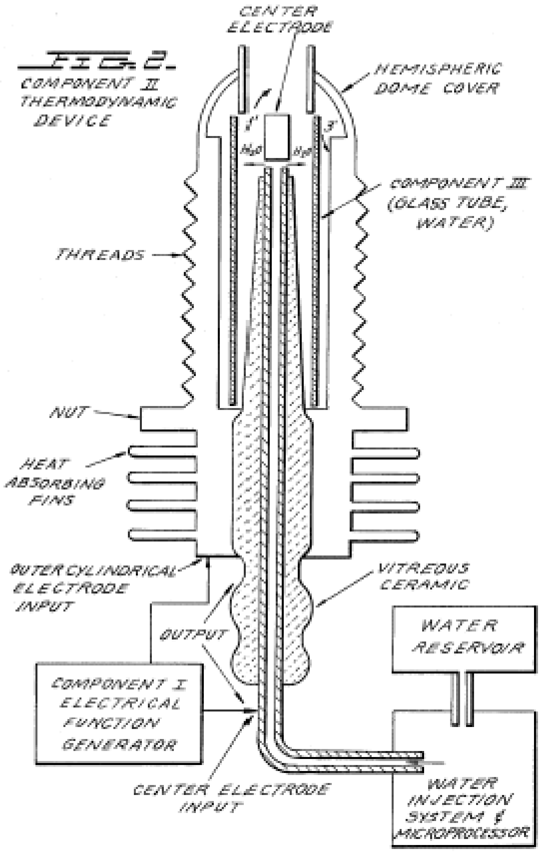

FIG. 3 is a cross-sectional view of Component III of the present invention, the water cell section of Component II;

FIG. 3.

COMPONENT III.
THE WATER CELL SECTION
OF COMPONENT II

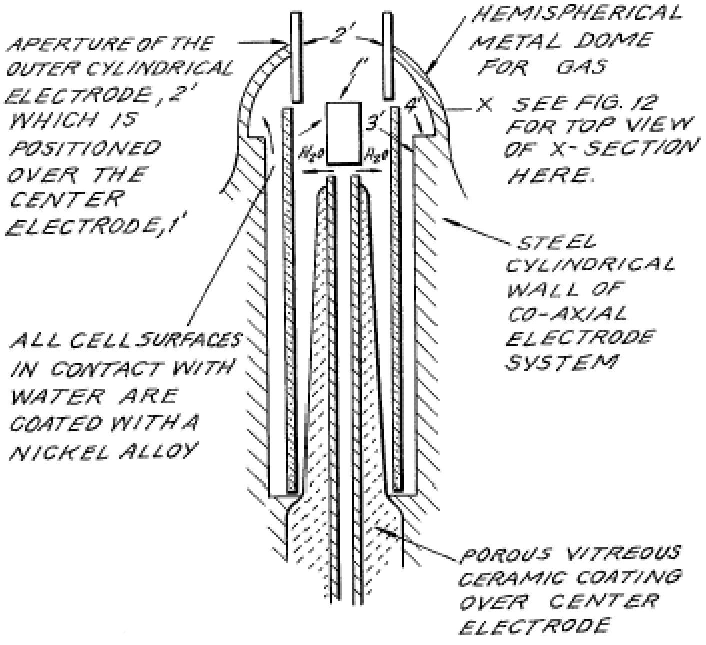

FIG. 4 is an illustration of the hydrogen covalent bond;

FIG. 4.

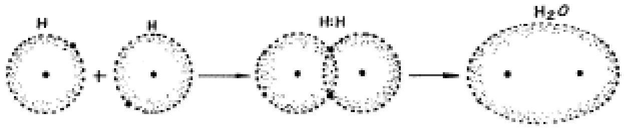

FIG. 4A is an illustration of the hydrogen bond angle;

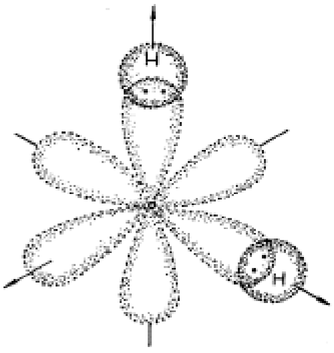

FIG. 4A.

UNHYBRIDIZED ORBITAL INTERACTION
IN WATER BOND ANGLE IS
104° RATHER THAN 90° AS PREDICTED

FIG. 4B is an illustration of hybridized and un-hybridized orbitals;

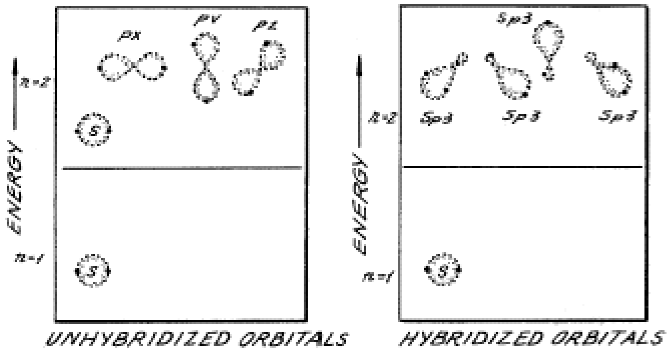

UNHYBRIDIZED ORBITALS HYBRIDIZED ORBITALS

FIG. 4B

FORMATION OF sp3 HYBRID ORBITALS

FIG. 4C is an illustration of the geometry of methane ammonia and water molecules;

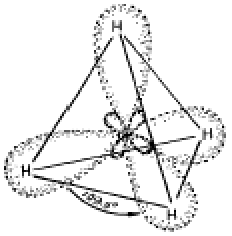

HYBRIDIZED METHANE MOLECULE CH_4

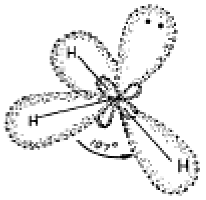

HYBRIDIZED AMMONIA MOLECULE NH_3

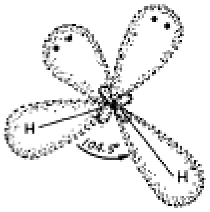

HYBRIDIZED WATER MOLECULE H_2O

FIG. 4C

GEOMETRY OF METHANE,
AMMONIA, AND WATER MOLECULES

FIG. 5 is an illustration of an amplitude modulated carrier wave;

FIG. 5

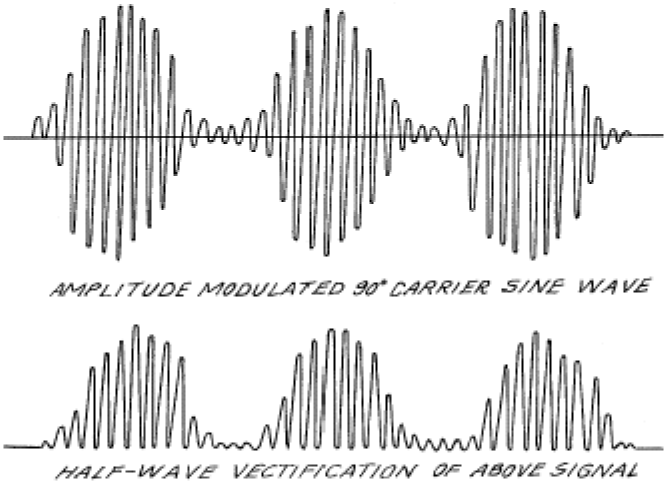

FIG. 6 is an illustration of a ripple square wave; FIG. 6 A is an illustration of unipolar pulses;

FIG. 6

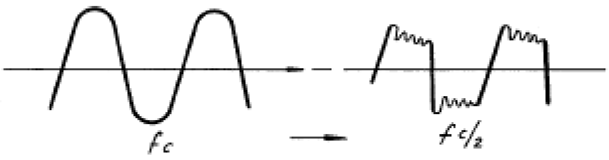

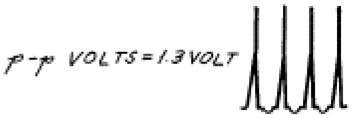

FIG. 6A

FIG. 7 is a diagram showing ion distribution at the negative electrode;

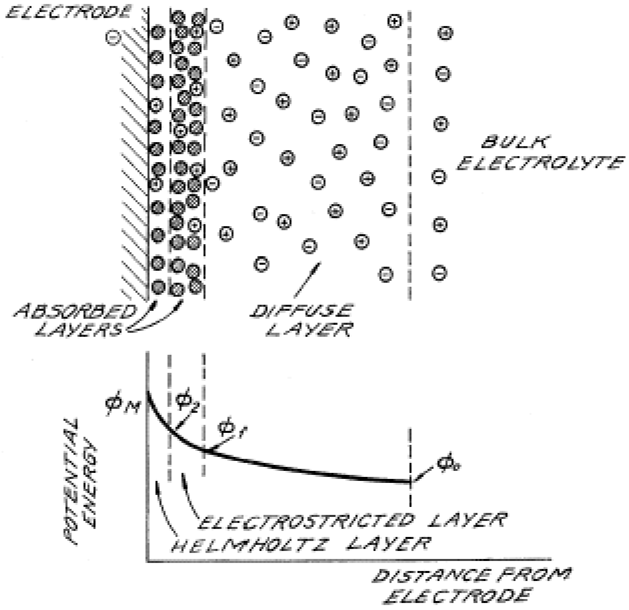

FIG. 7

DIAGRAM OF THE DOUBLE LAYER CLOSE TO A NEGATIVE ELECTRODE. THE POTENTIAL ENERGY OF POSITIVE IONS IN THIS REGION WHEN NO CURRENT IS FLOWING IS SHOWN IN THE LOWER DIAGRAM. $\phi_M - \phi_2$ IS THE ELECTRON TRANSFER POTENTIAL: $\phi_2 - \phi_1$ IS RELATED TO THE ACTIVATION OVERPOTENTIAL: AND $\phi_1 - \phi_0$ IS RELATED TO THE DIFFUSION OVERPOTENTIAL.

KEY
⊗ SOLVENT MOLECULE = H_2O
⊕ POSITIVE ION = H^+
⊖ NEGATIVE ION = O^-

FIG. 8 is an illustration of tetrahedral bonding orbitals;

FIG. 8.

EQUIVALENT TETRAHEDRAL
BONDING ORBITALS OF WATER

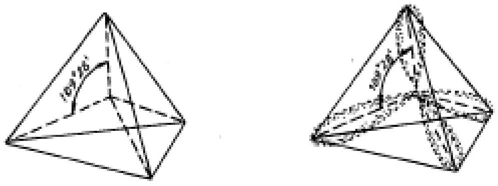

GEOMETRIC TETRAHEDRON

HYBRIDIZED BONDING
ORBITALS OF WATER

METHANE OVERLAP OF SPHERICAL
1s ORBITAL OF HYDROGEN WITH
sp3 BONDING ORBITALS OF CARBON
(a) RESULTS IN EQUIVALENT SIGMA
BONDS, THE MOLECULAR ORBITALS
OF (b).

FIG. 9 is an illustration of water molecules;

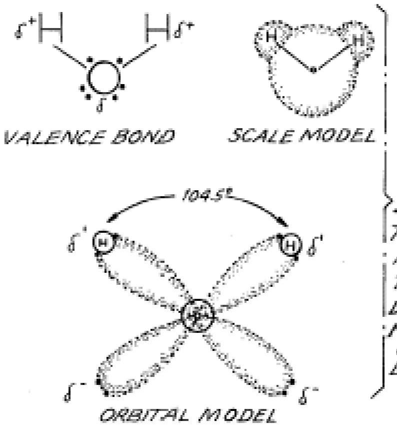

FIG. 9.

THE WATER
MOLECULE.
THE WATER
DIPOLE RESULTS
FROM UNEVEN
CHARGE
DISTRIBUTION.

FIG. 10 is an illustration of productive and non-productive collisions of hydrogen with iodine;

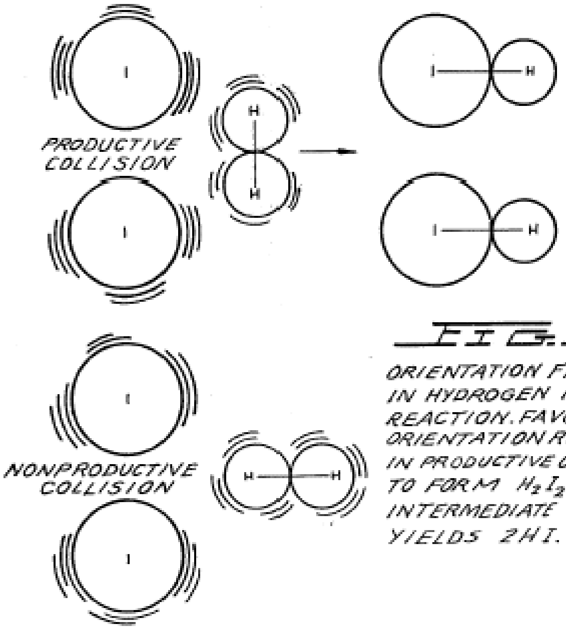

FIG. 10.

ORIENTATION FACTOR IN HYDROGEN IODIDE REACTION. FAVORABLE ORIENTATION RESULTS IN PRODUCTIVE COLLISION TO FORM H_2I_2 INTERMEDIATE WHICH YIELDS 2HI.

FIG. 11 is a wave form found to be the prime characteristic for optimum efficiency;

FIG. 11.

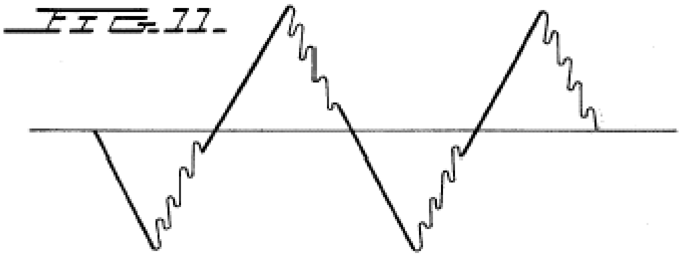

FIG. 12 is an illustration of pearl chain formation;

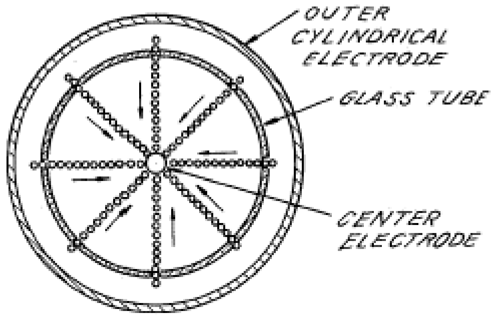

FIG. 12.

PEARL CHAIN FORMATION OF HYDROGEN GAS BUBBLES IN COMPONENT III AS SEEN FROM ABOVE

FIG. 13 is a plot of the course of the onset of the barrier effect and the unblocking of the

FIG. 13

A PLOT OF THE COURSE OF THE ONSET OF THE BARRIER EFFECT, AND UNBLOCKING IT WITH MECHANICAL TAPPING TO COMPONENTS II, III.

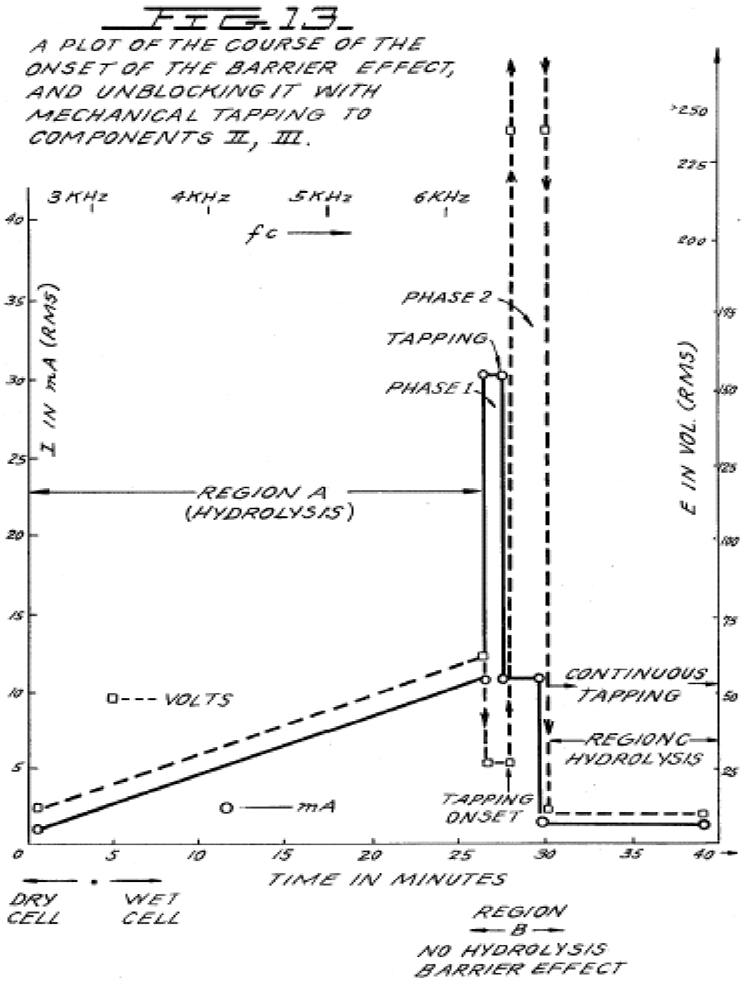

barrier effect; and

FIGS. 14A, B, and C are energy diagrams for exergonic reactions.

FIG. 14A.

(a) AN EXERGONIC REACTION. PRODUCTS HAVE A LOWER POTENTIAL ENERGY THAN REACTANTS, THEREFORE, ENERGY IS RELEASED.

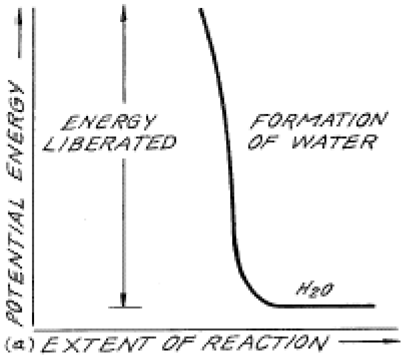

FIG. 14B.

(b) AN ENDERGONIC REACTION PRODUCTS HAVE A HIGHER POTENTIAL ENERGY THAN REACTANTS, CAUSING ENERGY TO BE CONSUMED.

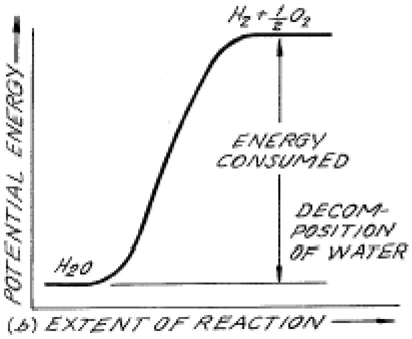

FIG. 14C.

ENERGY DIAGRAM FOR EXERGONIC REACTION. ACTIVATION ENERGY IS BARRIER TO BE OVERCOME FOR REACTION TO PROCEED, & IS SUPPLIED AS A "SPARK" TO THE GASES TO GET IGNITION.

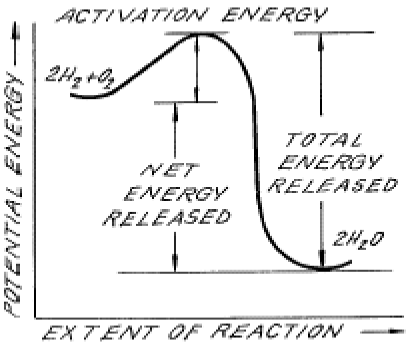

DETAILED DESCRIPTION OF INVENTION

Section 1 --- Apparatus of Invention
The apparatus of the invention consists of three components, the electrical function generator, the thermodynamic device, and the water cell.

COMPONENT I. The Electrical Function Generator ~
This device has an output consisting of an audio frequency (range 20 to 200 Hz) amplitude modulation of a carrier wave (range 200 Hz to 100,000 Hz). The impedance of this output signal is continuously being matched to the load, which is the second component, the thermodynamic device.
The electrical function generator represents a novel application of circuitry disclosed in my earlier U.S. Pat. Nos. 3,629,521; 3,563,246; and 3,726,762, which are incorporated by reference herein. See FIG. 1 for the block diagram of Component I.

COMPONENT II. The Thermodynamic Device

The thermodynamic device is fabricated of metals and ceramic in the geometric form of coaxial cylinder made up of a centred hollow tubular electrode which is surrounded by a larger tubular steel cylinder, said two electrodes comprising the coaxial electrode system which forms the load of the output of the electrical function generator, Component I. Said centre hollow tubular electrode carries water, and is separated from the outer cylindrical electrode by a porous ceramic vitreous material. Between the outer surface of the insulating ceramic vitreous material, and the inner surface of the outer cylindrical electrode exists a space to contain the water to be electrolysed. This water cell space comprises the third component (Component III) of the invention. It contains two lengths of tubular Pyrex glass, shown in FIGS. 2 and 3. The metal electrode surfaces of the two electrodes which are in contact with the water are coated with a nickel alloy.

The coaxial electrode system is specifically designed in materials and geometry to energize the water molecule to the end that it might be electrolysed. The centre electrode is a hollow tube and also serves as a conductor of water to the Component III cell. The centre tubular electrode is coated with a nickel alloy, and surrounded with a porous vitreous ceramic and a glass tube with the exception of the tip that faces the second electrode. The outer cylindrical electrode is made of a heat conducting steel alloy with fins on the outside, and coated on the inside with a nickel alloy. The centre electrode, and the cylindrical electrode are electrically connected by an arching dome extension of the outer electrode which brings the two electrodes at one point to a critical gap distance which is determined by the known quenching distance for hydrogen. See FIG. 2 for an illustration of Component II.

COMPONENT III. The Water Cell

The water cell is a part of the upper end of Component II, and has been described. An enlarged schematic illustration of the cell is presented in FIG. 3. The Component III consists of the water and glass tubes contained in the geometrical form of the walls of cell in Component II, the thermodynamic device. The elements of a practical device for the practice of the invention will include:

(A) Water reservoir; and salt reservoir; and/or salt

(B) Water injection system with microprocessor or other controls which sense and regulate (in accordance with the parameters set forth hereinafter):

a. carrier frequency

b. current

c. voltage

d. RC relaxation time constant of water in the cell

e. nuclear magnetic relaxation constant of water

f. temperature of hydrogen combustion

g. carrier wave form

h. RPM of an internal combustion engine (if used)

i. ignition control system

j. temperature of region to be heated;

(C) An electrical ignition system to ignite the evolved hydrogen gas fuel.

The important aspects of Component III are the tubular vitreous material, the geometry of the containing walls of the cell, and the geometrical forms of the water molecules that are contained in the cell. A further important aspect of the invention is the manipulation of the tetrahedral geometry of the water molecule by the novel methods and means which will be more fully described in the succeeding sections of this specification.

The different parts of a molecule are bound together by electrons. One of the electron configurations which can exist is the covalent bond which is achieved by the sharing of electrons. A molecule of hydrogen gas, H_2 is the smallest representative unit of covalent bonding, as can be seen in FIG. 4. The molecule of hydrogen gas is formed by the overlap and pairing of 1s orbital electrons. A new molecular orbit is formed in which the shared electron pair orbits both nuclei as shown in FIG. 4. The attraction of the nuclei for the shared electrons holds the atoms together in a covalent bond.

Covalent bonds have direction. The electronic orbitals of an uncombined atom can change shape and direction when that atom becomes part of a molecule. In a molecule in which two or more covalent bonds are present the molecular geometry is dictated by the bond angles about the central atom. The outermost lone pair (non-bonding) electrons profoundly affect the molecular geometry.

The geometry of water illustrates this concept. In the ground state, oxygen has the outer shell configuration $1s^2\ 2s^2\ 2p^2_x\ 2p^1_y\ 2p^1_z$

In water the 1s electrons from two hydrogens bond with the $2p_y$ and $2p_z$ electrons of oxygen. Since p orbitals lie at right angles to each other (see FIG. 4A), a bond angle of 90° might be expected. However, the bond angle is found experimentally to be approximately 104°. Theoretically this is explained by the effect of lone pair electrons on hybridized orbitals.

Combined or hybrid orbitals are formed when the excitement of 2s electrons results in their promotion from the ground state to a state energetically equivalent to the 2p orbitals. The new hybrids are termed sp^3 from the combination of one s and three p orbitals (See FIG. 4B). Hybrid sp^3 orbitals are directed in space from the centre of a regular tetrahedron toward the four corners. If the orbitals are equivalent the bond angle will be 109°28' (See Fig. 15) consistent with the geometry of a tetrahedron. In the case of water two of the orbitals are occupied by non-bonding electrons (See FIG. 4C). There is greater repulsion of these lone pair electrons which orbit only one nucleus, compared to the repulsion of electrons in bonding orbitals which orbit two nuclei. This tends to increase the angle between non-bonding orbitals so that it is greater than 109°, which pushes the bonding orbitals together, reducing the bond angle to 104°. In the

case of ammonia, NH_3 where there is only one lone pair, the repulsion is not so great and the bond angle is 107°. Carbon forms typical tetrahedral forms and components the simplest being the gas methane, CH_4 (See FIGS. 4C and 8). The repulsion of lone pair electrons affects charge distribution and contributes to the polarity of a covalent bond. (See FIG. 16)
As demonstrated in succeeding sections of this patent specification, a significant and novel aspect of this invention is the manipulation, by electronic methods and means, of the energy level of the water molecule, and the transformation of the water molecule into, and out of, the geometrical form of the tetrahedron. This is made possible only by certain subtle dynamic interactions among the Components I, II, and III of the present invention.

Section 2 --- Electrodynamics (Pure Water) ~

The electrodynamics of Components I, II, and III described individually and in interaction during the progress of pure water reaction rate in time. The reactions of saline water will be described in Section 3. It is to be noted that the output of Component I automatically follows the seven stages (hereinafter Stages A-F) of the reaction rate by varying its parameters of resonant carrier frequency, wave form, current voltage and impedance. All the seven states of the reaction herein described are not necessary for the practical operation of the system, but are included in order to explicate the dynamics and novel aspects of the invention. The seven stages are applicable only to the electrolysis of pure water.

STAGE A

Dry Charging of Component II by Component I

To make the new system operational, the Component I output electrodes are connected to component II, but no water is placed in the cell of Component III. When Component I output is across the load of Component II we observe the following electrical parameters are observed:

Range of current (I) output with (dry) load:

0 to 25 mA (milliamperes) rms.
Range of voltage (E) output with (dry) load:

0 to 250 Volts (AC) rms.

There is no distortion of the amplitude modulated (AM), or of the sine wave carrier whose centre frequency, f_c'

Ranges between 59,748 Hz to 66, 221 Hz

with f_c average = 62, 985 Hz

The carrier frequency varies with the power output in that f_c goes down with an increase in amperes (current). The AM wave form is shown in FIG. 5. It is to be noted here that the electrical function generator, Component I, has an automatic amplitude modulation volume control which cycles the degree of AM from 0% to 100%, and then down from 100% to 0% .congruent. every 3.0 seconds. This cycle rate of 3.0 seconds corresponds to the nuclear spin relaxation time, tau/sec, of the water in Component III. The meaning of this effect will be discussed in greater detail in a later section.

In summary, the principal effects to be noted during Stage A -dry charging of Component II are as follows:

a. Tests the integrity of Component I circuitry.

b. Tests the integrity of the coaxial electrodes, and the vitreous ceramic materials of Component II and Component III.

c. Electrostatic cleaning of electrode and ceramic surfaces.

STAGE B
Initial operation of Component I, Component II, and with Component III containing pure water. There is no significant electrolysis of water during Stage B. However, in Stage B the sine wave output of Component I is shaped to a rippled square wave by the changing RC constant of the water as it is treated;

There is an `Open Circuit` reversible threshold effect that occurs in Component III due to water polarization effects that lead to half wave rectification and the appearance of positive unipolar pulses; and

There are electrode polarization effects in Component II which are a prelude to true electrolysis of water as evidenced by oxygen and hydrogen gas bubble formation.
Appearance of Rippled Square Waves ~

Phase 1: At the end of the Stage A dry charging, the output of Component I is lowered to a typical value of:

I = 1mA. E = 24VAC. f_c .congruent 66,234 Hz.

Phase 2: Then water is added to the Component III water cell drop by drop until the top of the centre electrode, 1', in FIG. 3 is covered, and when this water just contacts the inner surface of the top outer electrode at 2'. As this coupling of the two electrodes by water happens, the following series of events occur:

Phase 3: The f_c drops from 66,234 Hz, to a range from 1272 Hz to 1848 Hz. The current and voltage both drop, and begin to pulse in entrainment with the water nuclear spin relaxation constant, tau =3.0 sec. The presence of the nuclear spin relaxation oscillation is proven by a characteristic hysteresis loop on the X-Y axes of an oscillscope.

I = 0 to 0.2mA surging at .tau. cycle

E = 4.3 to 4.8VAC surging at .tau. cycle

The sine wave carrier converts to a rippled square wave pulse which reflects the RC time constant of water, and it is observed that the square wave contains higher order harmonics. See FIG. 6:

With the appearance of the rippled square wave, the threshold of hydrolysis may be detected (just barely) as a vapor precipitation on a cover glass slip placed over the Component III cell and viewed under a low power microscope.

The `Open Circuit` Reversible Threshold Effect ~

Phase 4: A secondary effect of the change in the RC constant of water on the wave form shows up as a full half wave rectification of the carrier wave indicating a high level of polarization of the water molecule in tetrahedral form at the outer electrode.

With the already noted appearance of the rippled square wave, and the signs of faint vapor precipitation which indicate the earliest stage of electrolysis, it is possible to test for the presence of a reversible hydrolysis threshold. This test is carried out by creating an open circuit between Components I and II, i.e., no current flows. This is done by lowering the water level between the two electrodes in the region --- 1' and 2' shown in FIG. 3; or by interrupting the circuit between Component I and II, while the Component I signal generator is on and oscillating.

Immediately, with the creation of an `open circuit` condition, the following effects occur:

(a) The carrier frequency, f_c, shifts from Phase 4 valve 1272 Hz to 1848 Hz to 6128 Hz.

(b) The current and voltage drop to zero on the meters which record I and E, but the oscilloscope continues to show the presence of the peak-to-peak (p-p) voltage, and the waveform shows a remarkable effect. The rippled square wave has disappeared, and in its place there appear unipolar (positive) pulses as follows in FIG. 6A.

The unipolar pulse frequency stabilizes to ca. 5000 Hz. The unipolar pulses undergo a 0 to 1.3 volt pulsing amplitude modulation with .tau. at 3.0 seconds.

Thus, there exists a pure open circuit reversible threshold for water electrolysis in which the water molecules are capacitor charging and discharging at their characteristic low frequency RC time constant of 0.0002 seconds. It is to be noted that pure water has a very high dielectric constant which makes such an effect possible. The pulsing amplitude modulation of the voltage is determined by the Hydrogen Nuclear Spin Relaxation constant, where .tau..congruent.3.0 seconds. It is to be noted that the positive pulse spikes are followed by a negative after-potential. These pulse wave forms are identical to the classic nerve action potential spikes found in the nervous system of all living species that have a nervous system. The fact that these unipolar pulses were observed arising in water under the conditions of reversible threshold hydrolysis has a profound significance. These findings illuminate and confirm the Warren McCulloch Theory of water "crystal" dynamics as being the foundation of neural dynamics; and the converse theory of Linus Pauling which holds that water clathrate formation is the mechanism of neural anesthesia.

Phase 5: The effects associated with reversible threshold electrolysis are noted only in passim since they reflect events which are occurring on the electrode surfaces of Component II, the Thermodynamic Device.

A principal effect that occurs in Stage B, Phase 3, in Component II, the thermodynamic device, is that the two electrodes undergo stages of polarization. It has been observed in extensive experiments with different kinds of fluids in the cell of Component II , i.e., distilled water, sea water, tap water, Ringers solution, dilute suspensions of animal and human blood cells, that the inner surface of the outer ring electrode at 3' in FIG. 3 (the electrode that is in contact with the fluid) becomes negatively charged. Referring to FIG. 7, this corresponds to the left hand columnar area marked, Electrode .crclbar..

Electrode Polarization Effects at the Interface Between Components II and III ~

Concurrently with the driver pulsing of Component I at the .tau. constant cycle which leads to electrode polarization effects in Component II, there is an action on Component III which energizes and entrains the water molecule to a higher energy level which shifts the bond angle from 104° to the tetrahedral form with angle 109°28' as shown in FIGS. 8 and 15. This electronic pumping action is most important, and represents a significant part of the novel method of this invention for several reasons. First, the shift to the tetrahedral form of water increases the structural stability of the water molecule, thereby making it more susceptible to breakage at the correct resonant frequency, or frequencies. Second, increasing the polarization of the water molecule makes the lone pair electrons, S- connected with the oxygen molecule more electronegative; and the weakly positive hydrogen atoms, S+ more positive. See FIG. 9 and FIG. 22.

As the outer electrode becomes more electronegative, the centre electrode concomitantly becomes more electropositive as will be shown. As the polarity of the water molecule tetrahedron increases, a repulsive force occurs between the two S+ apices of the water tetrahedron and the negatively charged electrode surface within the region of the Helmholtz layer, as shown in FIG. 7. This effect "orients" the water molecule in the field, and is the well-known "orientation factor" of electrochemistry which serves to catalyse the rate of oxygen dissociation from the water molecule, and thereby causes the reaction rate to proceed at the lowest energy levels. See FIG. 10 for an example of how the orientation factor works.

Near the end of Stage B, the conditions are established for the beginning of the next stage, the stage of high efficiency electrolysis of water.

STAGE C

Generation of the complex wave form frequencies from Component I to match the complex wave form resonant frequencies of the energized and highly polarized water molecule in tetrahedral form with angles, 109°28' are carried out in Stage C.

In the operation of the invention active bubble electrolysis of water is initiated following Stage B, phase 3 by setting (automatically) the output of Component I to:

I = 1mA., E = 22VAC-rms,

causing the rippled square wave pulses to disappear with the appearance of a rippled saw tooth wave. The basic frequency of the carrier now becomes, f_c = 3980 Hz.

The wave form now automatically shifts to a form found to be the prime characteristic necessary for optimum efficiency in the electrolysis of water and illustrated in FIG. 11. In the wave form of FIG. 11, the fundamental carrier frequency, f_c = 3980 Hz., and a harmonic modulation of the carrier is as follows:

1st Order Harmonic Modulation (OHM) = 7960 Hz.

2nd Order Harmonic Modulation (II OHM) = 15,920 Hz.

3rd Order Harmonic Modulation (III OHM) = 31,840 Hz.

4th Order Harmonic Modulation (IV OHM) = 63,690 Hz.

What is believed to be happening in this IV OHM effect is that each of the four apices of the tetrahedron water molecule is resonant to one of the four harmonics observed. It is believed that the combination of negative repulsive forces at the outer electrode with the resonant frequencies just described work together to shatter the water molecule into its component hydrogen and oxygen atoms (as gases). This deduction is based on the following observations of the process through a low power microscope. The hydrogen bubbles were seen to originate at the electrode rim, 4', of FIG. 3. The bubbles then moved in a very orderly `pearl chain` formation centripetally (like the spokes of a wheel) toward the centre electrode, 1' of FIG. 3. FIG. 12 shows a top view of this effect.

Thereafter, upon lowering the output of Component I, the threshold for electrolysis of water as evidenced by vapor deposition of water droplets on a glass cover plate over the cell of Component III, is:

$$\left.\begin{array}{l} I = \text{mA.} \\ E = 10 \text{ volts} \end{array}\right\} = 10\ mw.$$

with all other conditions and waveforms as described under Stage C, supra. Occasionally, this threshold can be lowered to:

$$\left.\begin{array}{l} I - \text{mA.} \\ E = 2.6 \text{ volts} \end{array}\right\} = 2.6\ mw.$$

This Stage C vapor hydrolysis threshold effect cannot be directly observed as taking place in the fluid because no bubbles are formed --- only invisible gas molecules which become visible when they strike a glass plate and combine into water molecules and form droplets which appear as vapor.

STAGE D

Production of hydrogen and oxygen gas at an efficient rate of water electrolysis is slowed in Stage D when a barrier potential is formed, which barrier blocks electrolysis, irrespective of the amount of power applied to Components II and III.

A typical experiment will illustrate the problems of barrier potential formation. Components I, II, and III are set to operate with the following parameters:

$$\left.\begin{array}{l} I = 1\ \text{mA.} \\ E = 11.2\ \text{volts} \end{array}\right\} \begin{array}{l} = 11.2\ mw.\ \text{(at the start)} \\ \text{(rising to 100 } mw.\text{)} \end{array}$$

This input to Component III yields, by electrolysis of water, approximately 0.1 cm^3 of hydrogen gas per minute at one atmosphere and 289° K. It is observed that as a function of time the f_c crept up from 2978 Hz to 6474 Hz over 27 minutes. The current and the voltage also rose with time. At the 27th minute a barrier effect blocked the electrolysis of water, and one can best appreciate the cycle of events by reference to FIG. 13.

STAGE E

The Anatomy of the Barrier Effect

Region A: Shows active and efficient hydrolysis

Region B: The barrier region effect can be initiated with taps of the finger, or it can spontaneously occur as a function of time.

Phase a: The current rose from 1 mA to 30 mA. The voltage fell from 22 volts to 2.5 V.

Phase b: If component II is tapped mechanically during Phase a supra --- it can be reversed as follows: The current dropped from 30 Ma to 10 Ma. The voltage shot up from 5 volts to over 250 volts (off scale).

Throughout Phase a and Phase b, all hydrolysis has ceased. It was observed under the microscope that the inner surface of the outer electrode was thickly covered with hydrogen gas bubbles. It was reasoned that the hydrogen gas bubbles had become trapped in the electrostricted layer, because the water molecule tetrahedrons had flipped so that the S+ hydrogen apices had entered the Helmholtz layer and were absorbed to the electronegative charge of the electrode. This left the S- lone pair apices facing the electrostricted layer. This process bound the newly forming H.sup.+ ions which blocked the reaction

$H^+ + H^+ + 2e \Longrightarrow H_2$ (gas)

STAGE F

Region C: It was found that the barrier effect could be unblocked by some relatively simple procedures:

(a) Reversing the output electrodes from Component I to Component II, and/or:
(b) Mechanically tapping the Component III cell at a frequency T/2 = 1.5 seconds per tap.

These effects are shown in FIG. 12 and induce the drop in barrier potential from:

$$\left.\begin{array}{l} E = /250 \text{ volts to } 4 \text{ volts} \\ I \doteq 10 \text{ mA to } 1 \text{ mA} \end{array}\right\} \doteq 4 \; mw. \text{ (final state)}$$

Upon unblocking of the barrier effect, electrolysis of water resumed with renewed bubble formation of hydrogen gas.

The barrier potential problem has been solved for practical application by lowering the high dielectric constant of pure water, by adding salts (NaCl, KOH, etc.) to the pure water thereby increasing its conductivity characteristics. For optimum efficiency the salt concentration need not exceed that of sea water (0.9% salinity) in Section 3, "Thermodynamics of the Invention", it is to be understood that all water solutions described are not "pure" water as in Section B, but refer only to salinized water.

Section 3 --- The Thermodynamics of the Invention (Saline Water) ~

Introduction (water, hereinafter refers to salinized water) ~

The thermodynamic considerations in the normal operations of Components I, II, and III in producing hydrogen as fuel, and oxygen as oxidant during the electrolysis of water, and the combustion of the hydrogen fuel to do work in various heat engines is discussed in this section.

In chemical reactions the participating atoms form new bonds resulting in compounds with different electronic configurations. Chemical reactions which release energy are said to be exergonic and result in products whose chemical bonds have a lower energy content than the reactants. The energy released most frequently appears as heat. Energy, like matter, can neither be created nor destroyed according to conservation law. The energy released in a chemical reaction plus the lower energy state of the products is equal to the original energy content of the reactants. The burning of hydrogen occurs rather violently to produce water as follows:
$2H_2 + O_2$ ===> 2H2O - .DELTA.H 68.315 Kcal/mol (this is the enthalpy, or heat of combustion at constant pressure)
(18 gms) = 1 mol)
The chemical bonds of the water molecules have a lower energy content than the hydrogen and oxygen gases which serve at the reactants. Low energy molecules are characterized by their ability. High energy molecules are inherently unstable. These relations are summarized in the two graphs of FIG. 14. It is to be noted that FIG. 14 (b) shows the endergonic reaction aspect of the invention when water is decomposed by electrolysis into hydrogen and oxygen. FIG. 14 (a) shows the reaction when the hydrogen and oxygen gases combine, liberate energy, and re-form into water. Note that there is a difference in the potential energy of the two reactions. FIG. 14 (c) shows that there are two components to this potential energy. The net energy released, or the energy that yields net work is labelled in the diagram as Net Energy released, and is more properly called the free energy change denoted by the Gibbs function, -.DELTA.G. The energy which must be supplied for a reaction to achieve (burning) spontaneity is called the activation energy. The sum of the two is the total energy released. A first thermodynamic subtlety of the thermodynamic device of the invention is noted in Angus McDougall's *Fuel Cells*, Energy Alternative Series, The MacMillan Press Ltd., London, 1976, page 15 it is stated:
"The Gibbs function is defined in terms of the enthalpy H, and the entropy S of the system:

G = H-T S (where .tau. is the thermodynamic temperature)

A particularly important result is that for an electrochemical cell working reversibly at constant temperature and pressure, the electrical work done is the net work and hence,

.DELTA.G = $-w_e$

For this to be a reversible process, it is necessary for the cell to be on `open circuit`, that is, no current flows and the potential difference across the electrodes is the EMF, E. Thus,

.DELTA.G = -zFE

(where F is the Faraday constant --- the product of the Avogadro Constant + N_A = 6.022045 x 10^{23} mole^{-1}, and the charge on the electron, e = 1.602 189 x 10^{-19} C --- both in SI units; and z is the number of electrons transported.) when the cell reaction proceeds from left to right."

It is to be noted that the activation energy is directly related to the controlling reaction rate process, and thus is related to the Gibbs free energy changes.

The other thermodynamic subtlety is described by S. S. Penner in his work: Penner, S. S. and L. Icerman, *Energy*, Vol, II, Non-Nuclear Energy Technologies. Addison-Wesley Publishing Company, Inc. Revised Edition, 1977. Reading, Mass. Page 140 ff.

"It should be possible to improve the efficiency achieved in practical electrolysis to about 100% because, under optimal operating conditions, the theoretically-attainable energy conversion by electrolysis is about 120% of the electrical energy input. The physical basis for this last statement will now be considered.

"A useful definition for energy efficiency in electrolysis is the following: the energy efficiency is the ratio of the energy released from the electrolysis products formed (when they are subsequently used) to the energy required to effect electrolysis. The energy released by the process

H_2 (gas) + (1/2)O_2 (gas) ===> H2O (liquid)

under standard conditions (standard conditions in this example are: (1) atmospheric pressure = 760 mm Hg and (2) temperature = 298.16° K. = 25° C. = 77° F.) is 68.315 Kcal and is numerically equal to the enthalph change (.DELTA.H) for the indicated process. On the other hand, the minimum energy (or useful work input) required at constant temperature and pressure for electrolysis equals the Gibbs free energy change (.DELTA.G). There is a basic relation derivable from the first and second laws of thermodynamics for isothermal changes, which shows that .DELTA.G = .DELTA.H - T.DELTA.S where .DELTA.S represents the entropy change for the chemical reaction. The Gibbs free energy change (.DELTA.G) is also related to the voltage (E) required to implement electrolysis by Faraday's equation, viz. E = (.DELTA.G/23.06n) volts where .DELTA.G is in Kcal/mol and n is the number of electrons (or equivalents) per mol of water electrolyzed and has the numerical value 2.

"At atmospheric pressure and 300° K., .DELTA.H = 68.315 Kcal/mol of H2O (i) and .DELTA.G = 56.62 Kcal/mole of H2O (i) for the electrolysis of liquid water. Hence, the energy efficiency of electrolysis at 300° K. is about 120%."

$$\frac{\Delta G}{\Delta G} = 120\%$$

"(When) H_2 (gas) and O_2 (gas) are generated by electrolysis, the electrolysis cell must absorb heat from the surroundings, in order to remain at constant temperature. It is this ability to produce gaseous electrolysis products with heat absorption from the surroundings that is ultimately responsible for energy-conversion efficiencies during electrolysis greater than unity."

Using the criteria of these two authorities, it is possible to make a rough calculation of the efficiency of the present invention.

Section 4 --- Thermodynamic Efficiency of the Invention ~

Efficiency is deduced on the grounds of scientific accounting principles which are based on accurate measurements of total energy input to a system (debit), and accurate measurements of total energy (or work) obtained out of the system (credit). In principle, this is followed by drawing up a balance sheet of energy debits and credits, and expressing them as an efficiency ration, .eta..

$$\eta = \frac{\text{Credit}}{\text{Debit}} = \frac{\text{Energy Out}}{\text{Energy In}} = <1$$

The energy output of Component I is an alternating current looking into a highly non-linear load, i.e., the water solution. This alternating current generator (Component I) is so designed that at peak load it is in resonance (Components I, II, III), and the vector diagrams show that the capacitive reactance, and the inductive reactance are almost exactly 180° out of phase, so that the net power output is reactive, and the dissipative power is very small. This design insures minimum power losses across the entire output system. In the experiments which are now to be described the entire emphasis was placed on achieving the maximum gas yield (credit) in exchange for the minimum applied energy (debit).

The most precise way to measure the applied energy to Components II and III is to measure the Power, P, in Watts, W. This was done by precision measurements of the volts across Component II as root mean square (rms) volts; and the current flowing in the system as rms amperes. Precisely calibrated instruments were used to take these two measurements. A typical set of experiments (using water in the form of 0.9% saline solution = 0.1540 molar concentration) to obtain high efficiency hydrolysis gave the following results:

rms Current = I = 25 mA to 38 mA (0.025 A to 0.038 A); rms Volts = E = 4 Volts to 2.6 Volts

The resultant ratio between current and voltage is dependent on many factors, such as the gap distance between the centre and ring electrodes, dielectric properties of the water, conductivity properties of the water, equilibrium states, isothermal conditions, materials used, and even the presence of clathrates. The above current and voltage values reflect the net effect of various combinations of such parameters. The product of rms current, and rms volts is a measure of the power, P in watts:

P = I x E = 25 mA.times.4.0 volts = 100 mW (0.1 W)

P = I x E = 38 mA.times.2.6 volts = 98.8 mW (0.0988 W)

At these power levels (with load), the resonant frequency of the system is 600 Hz (.+-.5 Hz) as measured on a precision frequency counter. The wave form was monitored for harmonic content on an oscilloscope, and the nuclear magnetic relaxation cycle was monitored on an X-Y plotting oscilloscope in order to maintain the proper hysteresis loop figure. All experiments were run so that the power in Watts, applied through Components I, II, and III ranged between 98.8 mW to 100 mW.

Since, by the International System of Units --- 1971 (SI), One-Watt-second (Ws) is exactly equal to One Joule (J), the measurements of efficiency used these two yardsticks (1 Ws=1 J) for the debit side of the measurement.

The energy output of the system is, of course, the two gases, hydrogen (H_2) and oxygen ($1/2O_2$), and this credit side was measured in two laboratories, on two kinds of calibrated instruments, namely, a Gas Chromatography Machine, and, a Mass Spectrometer Machine.

The volume of gases, H_2 and $(1/2)O_2$, was measured as produced under standard conditions of temperature and pressure in unit time, i.e., in cubic centimetres per minute (cc/min), as well as the possibly contaminating gases, such as air oxygen, nitrogen and argon; carbon monoxide, carbon dioxide, water vapor, etc.

The electrical, and gas, measurements were reduced to the common denominator of Joules of energy so that the efficiency accounting could all be handled in common units. The averaged results from many experiments follow. The Standard Error between different samples, machines, and locations is .+-.10%, and only the mean was used for all the following calculations.

Section 5 --- Endergonic Decomposition of Liquid Water

Thermodynamic efficiency for the endergonic decomposition of liquid water (salinized) to gases under standard atmosphere (754 to 750 m.m. Hg), and standard isothermal conditions @ 25° C. = 77° F. = 298.16° K., according to the following reaction:
$H2O(1) ===> H_2 (g) + (1/2)O_2 (g) + .DELTA.G\ 56.620$ KCal/mole
As already described, .DELTA.G is the Gibbs function (FIG. 14b). A conversion of Kcal to the common units, Joules, by the formula, One Calorie = 4.1868 Joules was made.

DELTA.G = 56.620 Kcal x 4.1868 J = 236,954 J/mol of H2O (1) where, 1 mole is 18 gms.

DELTA.G = the free energy required to yield an equivalent amount of energy from H.sub.2 O in the form of the gases, H_2 and $(1/2)O_2$.

To simplify the calculations, the energy required to produce 1.0 cc of H2O as the gases, H_2 and $(1/2)O_2$ was determined. There are (under standard conditions) 22,400 cc = V, of gas in one mole of H2O. Therefore,

$$\frac{\Delta G}{V} = \frac{236{,}954\ \mathrm{J}}{22{,}400\ \mathrm{cc}}\ 10.5783\ \mathrm{J/cc}$$

The electrical energy required to liberate 1.0 cc of the H2O gases (where $H_2 = 0.666$ parts, and $(1/2)O_2 = 0.333$ parts, by volume) from liquid water is then determined. Since P = 1 Ws = 1 Joule, and V=1.0 cc of gas = 10.5783 Joules, then,

$$\begin{aligned} PV &= 1\ \mathrm{J} \times 10.5783\ \mathrm{J} = 10.5783\ \mathrm{J} \\ &= 10.5783\ Ws \end{aligned}$$

Since the experiments were run at 100 mW (0.1 W) applied to the water sample in Component II, III, for 30 minutes, the ideal (100% efficient) gas production at this total applied power level was calculated.

0.1 Ws x 60 sec x 30 min = 180.00 Joules (for 30 min)

The total gas production at Ideal 100% efficiency is, 180.00 J / 10.5783 J/cc = 17.01 cc H2O (g)

The amount of hydrogen present in the 17.01 cc H2O (g) was then calculated. 17.01 cc H2O (gas) x 0.666 H_2 (g) = 11.329 cc H_2 (g) 17.01 cc H2O (g) x 0.333 (1/2)O_2 (g) = 5.681 cc (1/2)O_2 (g)

Against this ideal standard of efficiency of expected gas production, the actual amount of gas produced was measured under: (1) standard conditions as defined above (2) 0.1 Ws power applied over 30 minutes. In the experiments, the mean amount of H_2 and (1/2)O_2 produced, as measured on precision calibrated GC, and MS machines in two different laboratories, where the S.E. is +-10%, was,

Measured Mean = 10.80 cc H_2 (g)
Measured Mean = 5.40 cc (1/2) O_2 (g)
Total Mean = 16.20 cc H2O(g)

The ratio, .eta., between the ideal yield, and measured yield,

$$\eta = \frac{\text{Measured } H_2(g)}{\text{Ideal } H_2(g)} = \frac{10.80 \text{ cc}}{11.33 \text{ cc}} = 91.30\%$$

Section 6 --- Energy Release ~

The total energy release (as heat, or electricity) from an exergonic reaction of the gases, H_2 and O_2, is given by,

$$H_2(g) + (\tfrac{1}{2})O_2(g) \longrightarrow H_2O\ (\ell) -- \Delta H\ 68.315\ \text{Kcal/mol} =$$

$$(--\Delta H\ 286{,}021\ \text{Joules})/\text{mol}$$

It is possible (Penner, Op. Cit., p. 128) to get a total heat release, or total conversion to electricity in a fuel cell, in the above reaction when the reactants are initially near room temperature (298.16° K.), and the reactant product (H2O) is finally returned to room temperature. With this authoritative opinion in mind, it is desirable to determine the amount of energy released (ideal) from the exergonic experiment. The total energy of 1.0 cc of H2O (1), as above is:

$$1.0 \text{ cc } \Delta H = \frac{286{,}021 \text{ J/mol}}{22{,}400 \text{ cc/mol}} = 12.7687 \text{ J/cc } H_2O\ (1)$$

for H_2 = 12.7687 x 0.666 = 8.509 J/0.66 cc H_2 for O_2 = 12.7687 x 0.333 = 4.259 J/0.33 cc (1/2)O_2

The energy produced from the gases produced in the experiments in an exergonic reaction was,

16.20 cc H2O (g) x 12.7687 J/cc H2O = 206,8544 J.

The overall energy transaction can be written as,

$$\frac{\text{EXERGONIC}}{\text{ENDERGONIC}} = \eta = \frac{-\Delta H}{+\Delta G} = \frac{206.8544\ \text{J}}{180,000\ \text{J}} =$$

$$1.14919 = 114.92\%$$

In practical bookkeeping terms the balance of debits and credits, n = (-.DELTA.H) - (+.DELTA.G), so, n = 206.8544 J - 180.0 = + 26.8544 J (surplus).

Since, in the invention, the gas is produced where and when needed, there is no additional cost accounting for liquifaction, storage, or transportation of the hydrogen fuel, and the oxygen oxidant. There fore, the practical efficiency, is

$$\eta_P = \frac{26.8544\ \text{J}}{180.0000\ \text{J}} =$$

$$14.919\%\ \text{(as net return on the original energy investment)}$$

In practical applications, the energy output (exergonic) of the Component II System can be parsed between the electrical energy required to power the Component I System, as an isothermal closed loop; while the surplus of approximately 15% can be shunted to an engine (heat, electrical, battery, etc.) that has a work load. Although this energy cost accounting represents an ideal model, it is believed that there is enough return (app. 15%) on the capital energy investment to yield a net energy profit that can be used to do useful work.

Conclusion

From the foregoing disclosure it will be appreciated that the achievement of efficient water splitting through the application of complex electrical waveforms to energized water molecules, i.e. tetrahedral molecules having bonding angles of 109°28', in the special apparatus described and illustrated, will provide ample and economical production of hydrogen gas and oxygen gas from readily available sources of water. It is to be understood, that the specific forms of the invention disclosed and discussed herein are intended to be representative and by way of illustrative example only, since various changes may be made therein without departing from the clear and specific teachings of the disclosure. Accordingly, reference should be made to the following appended claims in determining the full scope of the method and apparatus of the present invention.

4.0.4.2. Richardson William H.; US Patent #: 6,299,738; October 9, 2001

Fuel Gas Production by Underwater Arcing

Fuel gas production by underwater arcing bubbles up from the vicinity of the arc and is collected by an overlying hood and used or stored for use as a fuel, as in operation of a cutting or welding torch, or in operation of an internal-combustion engine. A reactor or production unit for such fuel gas contains a body of water, which may be open to the ambient atmosphere and be at ambient temperature. The arc is established in a spark gap between carbon electrodes and is facilitated by introduction of successive carbon rods end-on into the spark gap, as by dispensing them successively from a magazine.

TECHNICAL FIELD

This invention relates to production of gaseous fuel evolved as bubbles in underwater electrical arcing between carbon electrodes.

BACKGROUND OF THE INVENTION

Electrical arcing is known from U.S. patents to be conducive to hydrogen gas production, as via steam reforming at super atmospheric pressure and temperature, over a century ago by Eldridge, et al. in U.S. Pat. No. 603,058 (1898). See also the contributions by other inventors cited in the examination of my U.S. Pat. Nos. 5,435,274 (1995); 5,692,459 (1997); 5,792,325 (1998); and 5,826,548 (1998). Most, if not all, of those inventors were interested mainly in collecting hydrogen, so other gases were absent, dissolved, reacted, or otherwise removed. Yet hydrogen is far from the ideal fuel it was often imagined to be.

SUMMARY OF THE INVENTION

A primary object of the present invention is to derive by underwater arcing a gaseous fuel easily and cleanly combustible with air.

Another object of this invention is to produce from underwater arcing a fuel gas rich in easily and cleanly combustible components.

A further object of the invention is to utilize such fuel gas, as in cutting or welding torches and in internal combustion engines.

Yet another object is an production of such a gaseous fuel in a simple production unit operable at ambient temperature and pressure.

A still further object is to achieve the aforementioned objects economically with such fuel--free of noxious combustion effluents.

In general the objects of the present invention are attained by making/using gases evolved as bubbles in underwater carbon arcing.

More particularly, the objects of this invention are attained by means of a plurality of underwater electrodes plus added carbon.

Other objects of the present invention, together with means and methods for attaining the various objects, will become apparent from the following description and the accompanying diagrams of preferred embodiments presented here by way of example rather than limitation.

SUMMARY OF THE DRAWINGS

FIG. 1 is a schematized elevation of apparatus adapted to make, and apparatus to use, the fuel gas of this invention; and

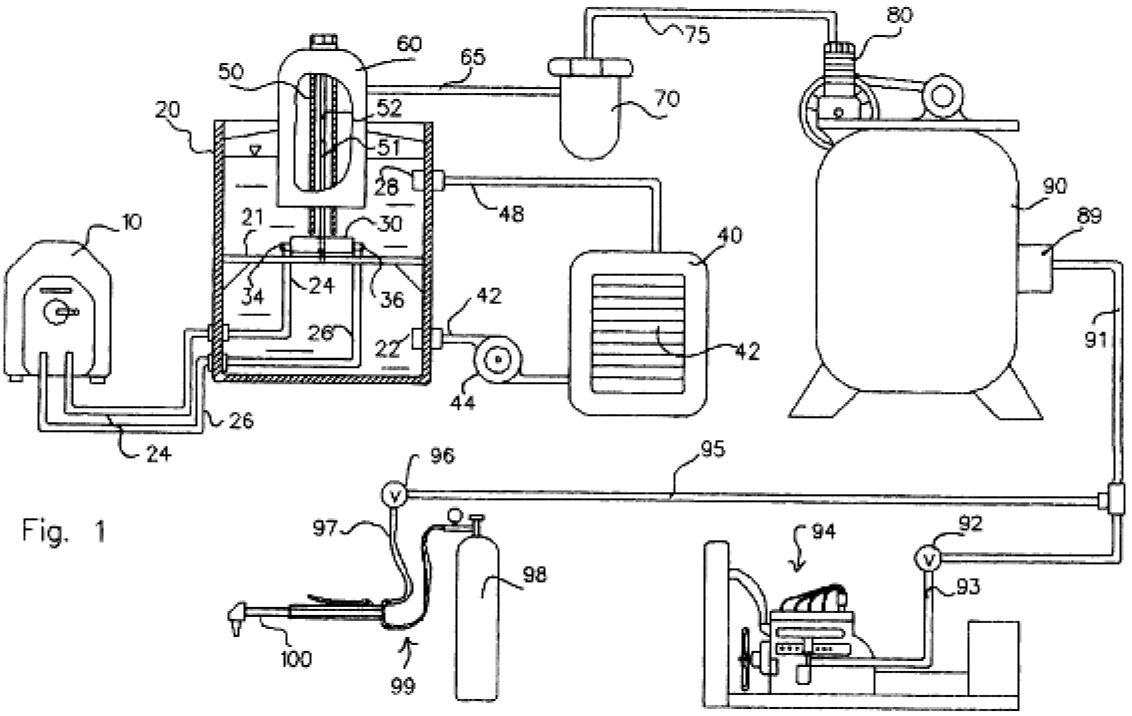

Fig. 1

FIG. 2 is a fragmentary perspective view, on an enlarged scale, of a spark gap and vicinity, including components of the apparatus;

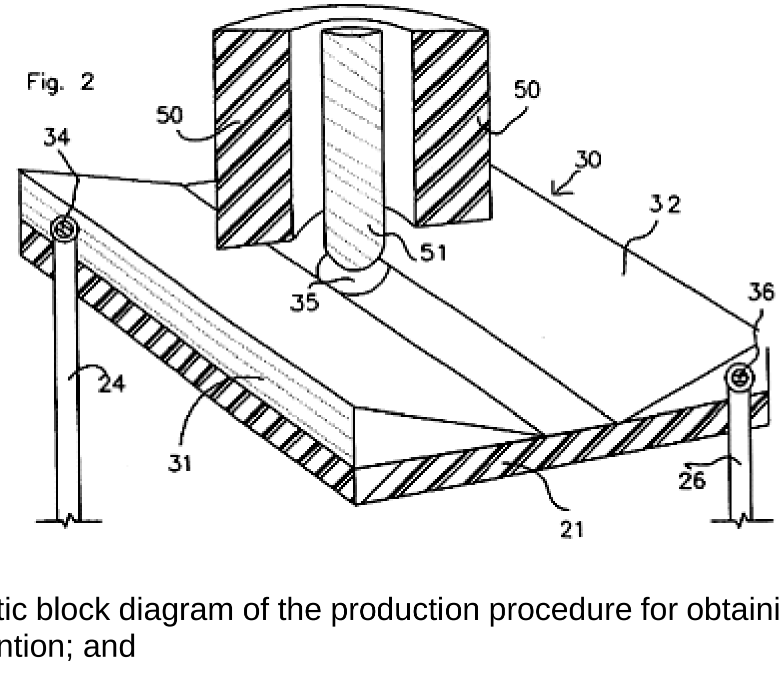

Fig. 2

FIG. 3 is a schematic block diagram of the production procedure for obtaining the gaseous fuel mixture of this invention; and

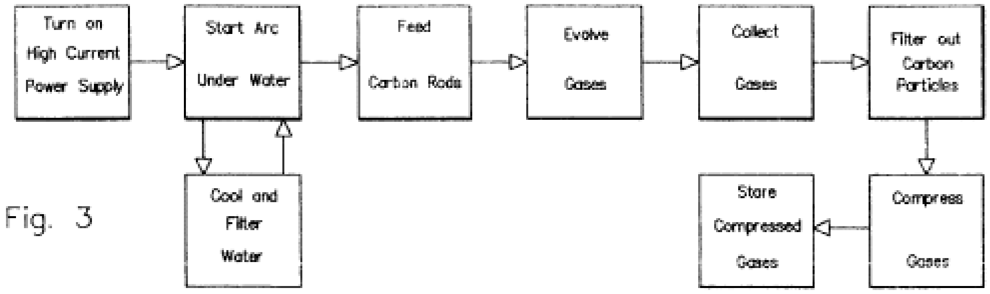

Fig. 3

FIG. 4 is a schematic block diagram of using the same fuel gas in cutting/welding torches and/or in internal-combustion engines.

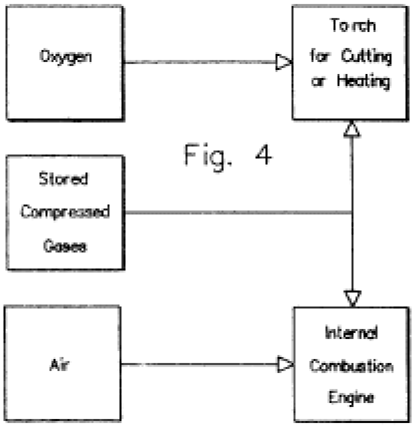

Fig. 4

DESCRIPTION OF THE INVENTION

FIG. 1 shows in schematic elevation apparatus for evolving and collecting a mixture of gases as the fuel gas of this invention. At the left is welder 10 as an exemplified high-current power supply. Pair of electrical leads 24, 26 go to and through reactor wall 20 and connect at terminals 34, 36 across block electrode assembly 30 (detailed in FIG. 2) supported on horizontal partial partition 21.

Reactor 20, the gas-production unit, contains a body of water (dashes) to a high level (triangle) covering the electrode assembly. Also submerged is water outlet 22, near the bottom, to water line 42 containing filter/pump 44 and leading to heat exchanger 40 hidden by louvers 42 and on to inlet 48 (near top) at the end of return line 48 from the heat exchanger. Carbon rod magazine 50 and laterally surrounding gas collection hood 60 enter the reactor from the top and terminate under water, above block electrode assembly 30. First and second rods, 51 and 52, are aligned upright within the magazine, centred above the electrode assembly, with the bottom end of the first rod close to bridging the narrow edges of the respective electrodes (shown later) and with the top end of the first such rod touching the bottom end of the second such rod, to follow on as the first rod is consumed progressively at a prevailing temperature of several thousand degrees in the electrically conducting arc.

Gas takeoff line 65 connects the interior of hood 60 to filter 70, from which gas collection line 75 connects to compressor 80 on top of, and communicating with, storage tank 90. Tank outlet valve 89 has fuel supply line 91 connecting the tank through valve 92 to fuel line 93 of internal combustion engine assembly 94. Connecting further fuel supply line 95 connects through valve 96 to fuel line 97 of torch 100 to which line 99 connects from oxygen tank 98.

FIG. 2 shows fragmentarily, in perspective, electrode assembly 30 on reactor partition 21 (much as FIG. 1 but larger) defining a spark gap there between. Central opening 35 in the compartment is as wide as the spacing between the narrow edges of respective wedge-shaped electrodes 31, 32. The rounded lower end of rod 51 is nearing the opening, within which it will rest as the arc is struck across the electrodes and through it when power is applied across the electrodes at terminals 34, 36. Water illustration is omitted as unnecessary to an understanding of this view, but it should be understood that an arc between the electrodes via the rod heats the water so greatly as to break the water down into constituent gases (and perhaps further), thus producing gaseous hydrogen, also gases comprising hydrogen and carbon, or carbon and oxygen, or all three.

FIG. 3 shows, in block form, a flow diagram of steps that take place in the practice of this invention. Sequential steps include Turn On High Current Power Supply, Start Arc Under Water, Feed Carbon Rods, Evolve Gases, Collect Gases, Filter Carbon Particles, Compress Gases, and Store Compressed Gases. The last mentioned step is performed upon an evolved, partly reacted, mixture of constituent and by-product gases, useful as a fuel gas. Cool And Filter Water is a cyclical accessory step useful in maintaining water conditions as desired, especially at the locus of gas evolution--from which the evolved gases bubble up through the intervening water and into the overlying hood, to be drawn off and stored for use.

FIG. 4 shows, in similar block form, examples of subsequent usage of the gaseous mixture evolved and collected (as in FIG. 3). Stored Compressed Gases go as a fuel gas to a Torch for Cutting or Heating, also supplied with Oxygen, and/or to an Internal Combustion Engine, also supplied with Air. These exemplified uses may be augmented in kind or in number in accordance with demand and supply.

How to practice this invention is readily apparent from FIGS. 1 to 4 and the foregoing description. Underwater arcing occurs when an electrical potential (either A.C. or DC) such as used in steel welding is applied across the block electrodes, preferably composed essentially of graphite, and aided by a conductive rod (preferably similarly carbon) bridging the spark gap between the electrodes. The evolved gas(es) is(are) evidenced by bubbles forming in the vicinity and rising in the surrounding body of water, thus entering the hood.

The mixture of gases so evolved and collected according to the present invention contains (by volume) gaseous hydrogen in major amount, and carbon monoxide in substantial minor amount. Also likely to be present as end-products (here by-products) are carbon dioxide and gaseous oxygen--insufficient to render the mixture of gases to be self-combustible (rarely more than several percent). Traces of simple organic gases may be present, as may complex aggregations (as yet unidentified) of the constituent carbon, hydrogen and/or oxygen.

Carbon in the resultant gaseous mixture comes mainly from the rod used to bridge the block electrodes. Carbon dioxide content is limited by relative absence of hydrocarbons, oils, or other organic chemicals, such as otherwise might combine with the oxygen released by water decomposition in the reactor. Resulting gaseous oxygen may be attributed to the water decomposition and/or to having been dissolved in the water. Operation of an internal-combustion engine is substantially free of noxious effluents usually characteristic of fossil fuel combustion and will reduce any carbon deposits therein. An engine running on this fuel in a closed room lacks noxious fumes and related health hazards (except for eventual oxygen depletion).

Analysis of this fuel gas can be expected to verify about three to five tenths hydrogen, two to three tenths carbon monoxide, less than one tenth organics, maybe up to a couple tenths of aggregations derived from C, and/or H, and/or O--not yet adequately identified.

The resulting fuel gas burns well, upon access to air or oxygen in effective amount, with substantially clear flame and no sooting. As noted, with air or oxygen it can fuel a cutting or welding torch, and with air alone can operate an internal combustion engine without need for any atomizing carburettor or complex injection nozzle. Such an engine may be of jet, piston, turbine, or other type, useful in powering a vehicle, a pump, or an electrical generator, for example.

No unusual materials of construction are needed in apparatus of this invention. The reactor need be only a structurally sound tank, such as steel or other metal, and is preferably grounded. The hood to receive the evolved gases, and the magazine to hold and dispense carbon rods, are conveniently made of metal, plastic, or ceramic. The magazine may accommodate several to a dozen or more rods, being conveniently loaded substantially upright such as side-by-side on a surface descending to an exit directly above a desired electrode-bridging spark gap--so as to be easily loaded, then fed by gravity.

The rods themselves may be common welding rods, composed mainly or exclusively of particulate carbon pressed into continuous form. The electrode blocks are solid graphite, also generally available for high-temperature and/or high-pressure environments, although the operating environment of the present process is much less demanding. Chemical inertness and electrical conductivity are highly desirable, and the reactor or production unit may be operated open to ambient conditions or may be enclosed, similarly, and heated or pressurized

An equidistantly spaced third electrode is preferred to enable three-phase A.C. operation of the reactor for maximum output. An electrical potential approximating a hundred volts is recommended.

The water to be decomposed in the process of this invention is not subject to any unusual requirement, whereupon most fresh water sources, or brackish or sea water, even wastewater can be expected to prove satisfactory. Selected water should not contain petroleum products or other organic--especially fossil--materials in more than token concentration, as they might contaminate the resulting fuel gas with a plethora of component compositions less clean-burning, or otherwise might result in a fuel gas that is less desirable overall. Biomass materials are usually a similarly undesirable feedstock, and preferably are removed by coagulation, flotation, filtration, etc.

The toxicity of carbon monoxide is tolerated in preference to conversion of carbon monoxide to carbon dioxide in the reactor--with reduction in fuel capability--because concentrated fuel materials of whatever sort pose health and safety hazards. Caution is essential in handling and using any fuel, so it is expected to be exercised in the instance of this fuel gas--which is much safer than gasoline.

As combustion products of hydrogen and/or carbon monoxide are predominantly simply water and carbon dioxide, clean burning is an understandable characteristic of the resulting fuel gas, as is the preference for exclusion of organic materials generally. Further advantages include the fact that water is a relatively low-cost feed material, as is carbon (if less so). Also, little electric power is required because only low impedance exists across the spark gap during conduction for decomposing/vaporizing both carbon and water.

The present invention is especially desirable in those regions devoid of fossil fuels, or that are subject to excessive pollution from long-time usage of low-grade and/or high-contaminant fuels, or where the inhabitants lack the purchasing capability to obtain fuel.

Preferred embodiments and variants have been suggested for this invention. Other modifications may be made, as by adding, combining, deleting, or subdividing compositions, parts, or steps, while retaining at least some of the advantages and benefits of the present invention--which itself is defined in the following claims.

4.0.4.3. Aqua Fuel – US Patent #: 5,435,274 ;

A New Fuel Produced from Water and Carbon

The Aqua Fuel Technology is covered by US Patent 5,435,274 ("Electrical Power Generation Without Harmful Emissions"); US Patent 5,692,459 ("Pollution-Free Vehicle Operation"); US Patent 5,792,325 ("Electric Arc Material Processing System"); US Patent 5,826,548 ("Power Generation without Harmful Emissions"); and other US Patents Pending.

Toups Technology Licensing (TTL) announced the scientific documentation of Aqua Fuel Technology: Aqua Fuel is a reliable, inexpensive, non-polluting gas which is a viable, immediately available replacement for fossil-based fuels. TTL licenses technologies primarily in the energy, environment and natural resource market segments. The Company also makes acquisitions of existing companies which compliment TTL's technology mix.

Since November 1, 1997, the Company has been engaged in scientific documentation relating to the characteristics of the Aqua Fuel Technology.

The Aqua Fuel process results in the production of a gas originally identified by patent owner William H. Richardson, Jr. The Aqua Fuel process encompasses an electric discharge on carbon rods within ordinary, sea or other forms of water. The discharge decomposes the carbon rods, separates the water and createsa plasma of mostly ionised hydrogen, oxygen and carbon atoms at about 5,000 degrees C. The atoms combine in various forms, cool down in the water surrounding the discharge and bubble to the surface where they are collected and stored.

Toups Technology has secured the exclusive world- wide rights to all applications covered by the above listed patents.

Aqua Fuel is inherently safe to produce and store because all oxygen resulting from the separation of the water is combined with the carbon and it is then released only during combustion.

Aqua Fuel is easy to produce anywhere desired because of the simplicity of the equipment.

Aqua Fuel can be produced in a large column with consumer-oriented equipment, while unlimited volume can be produced on industrial plants.

All bacteriological activities ceased to exist in 3 gallons of sewage following 1 minute of exposure to the Aqua Fuel apparatus.

The Aqua Fuel process provides a new viable form of recycling sewage either by municipalities or by individual households.

An engine running on Aqua Fuel would have to operate for over 210,000 hours to equal the amount of CO produced in 1 hour while being fuelled by gasoline.
It should be also noted that Aqua Fuel could be used as a fuel without any catalytic converter and the emission exhausts would still meet EPA requirements.

The minimal value of the energy content of Aqua Fuel produced from tap water is 380 BTU/cf.

The energy content of Aqua Fuel from tap water has resulted to be higher than that of hydrogen (300 BTU/cf).

The minimal value of the energy content of BioMassAqua Fuel (6.8 lb brown sugar dissolved in 1 gallon water) is 532 BTU/cf.

Aqua Fuel emerges as a combustible fuel with better ecological features of any other fuel. In fact, all conventional fossil fuels need large amounts of oxygen to burn and release no appreciable oxygen in the combustion exhausts, thus being the primary, undisputed cause of the atmospheric oxygen depletion.

Oxygen consumption for Bio Aqua Fuel is 5 %, which is less than one-third of the oxygen consumption by natural gas.

Aqua Fuel has the best exhaust characteristics second to no other available fuel (including hydrogen), as well as the smallest oxygen consumption (for instance, natural gas uses 213 % more Oxygen than Aqua Fuel). As a result, Aqua Fuel is one of the most environmental friendly fuels in all respects, including pollutants, atmospheric oxygen depletion, health problems and other factors.

Preliminary tests performed using a 1987 Ford Tempo which had been converted to research on natural gas and included a number of measurements via on-board sensors were taken with the following findings:

1. The outstanding combustion exhausts indicated negative readings, that is, recycling of pollutants in the air.

2. A number of octanes of Aqua Fuel resulted to be higher than 160, the upper limit of the measuring equipment.

3. A reduction of the temperature of the exhaust pipes from 1,340 degrees F for natural gas to 1,160 degrees F for Aqua Fuel.

The results of the tests establish that Aqua Fuel can be successfully used to power combustible engines used in cars and trucks.

The cost of the electricity needed to produce Aqua Fuel has been measured at $ 0.02/cf under the use of 3 welders in series absorbing 39 kW with a discharge at 60V DC and Aqua Fuel production of 151cfph. Said cost is expected to decrease considerably via the use of power units specifically built for the process.

When Aqua Fuel results from recycling waste-water, the cost of Aqua Fuel is $ 0.00.
When compared with acetylene as a cutting gas, the tests have established that Aqua Fuel is a preferable fuel for metal cutting even when produced from tap water, with better characteristics expected for Aqua Fuel with higher energy content.

Initial measures of the primary Aqua Fuel characteristics have yielded the following numerical values:

> Energy content of at least 380 BTU/cf;

> Molecular weight of 15.24 lbm/mole,

> Specific gas constant of 101.4 ft-lbf/lbm- deg;

> Correction factor for flow meter of 0.942.

The production of Aqua Fuel increases nonlinearly with the increase of the discharge voltage and it is at least 20 % more efficient with an AC discharge operating at 20 Hertz as compared to a DC discharge with the same electric energy.

The new chemical structure of Aqua Fuel implies the emergence of new technologies such as new methods for gas liquefaction, new types of fuel cells, enhanced thermo chemical reactions and new methods of producing magnetically polarised gases.

1. Aqua Fuel is cost competitive, has dramatically less pollutant in the combustion exhaust, and can be more easily and safely produced and stored anywhere desired than any other combustible gas, even neglecting its free production as a by product of sewage recycling;

2. In view of the above characteristics, Aqua Fuel is one of the best, if not the best fuel available at this writing for automotive and other uses on a world-wide basis, with particular reference to consumer, but also for municipal industrial and military applications.

3. The Aqua Fuel process provides a basically novel method for recycling liquid waste which produces Aqua Fuel as a usable gas, water usable for irrigation and solids usable for fertilisation;

4. Aqua Fuel is an excellent gas for the production of electricity, particularly in the free form obtained from the recycling of liquid waste from cities and municipalities;
5. Systematic scientific experimentations and theoretical studies have identified a number of anomalies in Aqua Fuel which are applicable to all other gases, thus permitting a new gas technology with implications and applications to the entire gas industry and consequentially vast, additional economic horizons.

Commercialization
The Company is now engaged in the construction of the following products for sale:
The consumer home power generator. A unit approximately the size of a large air conditioning unit designed to be plugged into a 120V outlet overnight so as to produce Aqua Fuel. The liquid medium used is the daily household sewage which collects in the apparatus during the course of the day. The Aqua Fuel is captured and stored in a tank. Each morning, the homeowner disengages conventional power source by switching main circuit breakers and engages the Aqua Fuel powered generator to provide all daytime electricity needs. The homeowner

discharges the recycled water into the municipalities' wastewater system and the process begins again.

The overnight automotive power generator. Available for conventional cars retrofit for Aqua Fuel in a manner similar to that used to retrofit cars to natural gas. A unit approximately the size of a large air conditioning unit designed to be plugged into a 120V outlet overnight so as to produce Aqua Fuel. The liquid medium used is the daily household sewage which collects in the apparatus during the course of the day. The Aqua Fuel is captured and stored in a tank. Each morning, the consumer refills the automotive tanks with the Aqua Fuel produced overnight providing enough fuel for typical daily usage. The automobile owner discharges the recycled water into the municipalities' wastewater system and the process begins again.

Aqua Fuel Desk-Top Production Unit. A unit approximately the size of a large briefcase which encompasses the production and storage of Aqua Fuel. The unit is designed to demonstrate the concept and practical production methods of Aqua Fuel for sale to high school and college laboratories as well as interested persons world-wide.

Recycling Demonstrator. A unit identical in shape to a six-foot-long, twelve-inch-diameter pipe into which polluted water is introduced at the point of entry, passes through the Aqua Fuel process (electric arc across carbon rods in water) and cleaned water leaves at a point of debarkation.

"A stated goal of TTL has been to use our technologies for the improvement of our planet and the protection of our natural resources," said TTL CEO Leon Toups. "We are proud to be at the forefront of delivering the fuel for the next century: Aqua Fuel. The implications of our science that the Aqua Fuel process can clean polluted waterways while producing a reliable, affordable, pollution-free fuel for both consumer and industrial uses goes a long way toward helping us achieve our stated goal. In our commercialisation phase we now intend to engineer the application that can be scaled up for practical use."

4.0.4.4. Ross Bill; US #: 6,209,493; April 3, 2001;

Internal combustion engine kit with electrolysis cell

An electrolysis cell and internal combustion engine kit including an electrolysis cell is disclosed. The cell includes a sealed plastic body having an inlet and an outlet. The plastic body includes a first terminal located at the top of the body, a second terminal located adjacent to the first terminal and insulated conductors associated with each terminal extending through the body and towards the bottom end thereof. Each terminal ends in a respective anode and cathode which are operatively connected to the terminals. The anode and cathode are spaced apart from one another within the body. When an electrolysis solution is placed in the body, and a current provided across the electrodes, water is caused to decompose into hydrogen and oxygen. These combustible gases are then passed into the internal combustion engine to increase the efficiency and power thereof. In one embodiment a reservoir is provided to ensure that the level is maintained in the cell. Safety features include a low level sensor switch and low level shut off, a temperature sensor and high temperature cut off, and a pressure sensor and high pressure cut off.

FIELD OF THE INVENTION

This invention relates to the general field of combustion engines, and more particularly, to combustion engines of the type that use conventional hydrocarbon fuels such as gasoline or diesel fuel, natural gas and propane in combination with fuel additives such as hydrogen and oxygen. Most particularly, this invention relates to an electrolysis cell capable of producing hydrogen and oxygen for use in an internal combustion engine as a fuel additive for improving performance and reducing pollution from the internal combustion engine.

BACKGROUND OF THE INVENTION

Modern gasoline and diesel engines are much more efficient and less polluting than similar engines of even a few years ago. However, due to the increased number of vehicles in use, levels of air pollution continue to rise even in light of more efficient and clean running vehicles. Therefore, there has been increasing pressure to develop vehicles which have lower emissions, and thus are less polluting than conventional automotive technology permits.

For example, under certain government "Clean Air" legislation, a certain number of vehicles are required to be emission free. This legislation has put pressure on OEM's to develop alternate fuel technologies including electric cars and vans, natural gas and propane fuelled vehicles, hydrogen cell vehicles and the like. While a number of these technologies are promising, some are still a long way from commercial implementation, and others appear to have reached the limit of present design capabilities without yielding a consumer acceptable product. Therefore, attention has refocused on conventional gas and diesel burning engines, to try to develop a more pollution free and efficient combustion system.

In the past, it has been discovered that the use of hydrogen and oxygen as a fuel additive increases the efficiency of an internal combustion engine and reduces pollution considerably. Both advantages appear to be the by-product of faster flame speed that is as much as 9 times that of gasoline, resulting in more complete combustion of the fuel in the combustion chamber, with the resultant reduction in soot (semi-bumt hydrocarbons) and other pollutants such as nitrous oxide, carbon monoxide, and an increase in output energy for a greater fuel efficiency and horsepower.

U.S. Pat. No. 5,231,954, which issued on Aug. 3, 1993, teaches an electrolysis cell for use in connection with a combustion engine for generating hydrogen and oxygen gases which are added to the fuel delivery system as a supplement to the gasoline or other hydrocarbons burned therein. While this patent proposes an electrolysis unit which is relatively simple and easy to install, this prior device has a number of problems which require considerable maintenance and lead to higher costs associated with installing and using the device.
This patent teaches a low concentration of electrolyte, by weight, which is created by pre-mixing and pre-charging a concentrate for 24 hours. This results in a higher resistance electrolysis cell which can be connected directly to a conventional vehicle battery. In the context of consumer applications, it is too awkward to do this pre-charging and mixing. In addition, since the resistance of the solution is relatively high, a high amount of heat is created in the cell during use, which can be problematic.

The preferred form of the electrolysis chamber taught by this patent is a plastic walled chamber, into which the terminals are sealed. The terminals project from the lower side of the plastic shell of the electrolysis cell itself.

The unit comes on when the motor is turned on and the cell, and in particular the terminals, tend to heat up considerably. Under the continual heating and cooling cycling the seals around terminals can crack leading to a loss of seal integrity and leaks. This requires more frequent replenishment of the electrolyte, and a loss of function. In addition, the electrodes of this prior device extend about two thirds to three quarters of the way to the top of the device. Thus, there is not much free board of solution above the top of the electrode which is disadvantageous. After only a short period of operation, parts of the electrodes become exposed, creating a need for addition of distilled water. This requires frequent replenishment of the fluid, which is awkward and time consuming. Further there is always a risk, when the electrodes are exposed, of a spark causing an explosion of the highly combustible gases in the unit.

In addition, the patent teaches that the gases produced in the electrolysis chamber be introduced directly into the PVC vacuum line used for circulating crank case gases to the intake manifold so that oxygen and hydrogen generated in the electrolysis cell are withdrawn by the vacuum effect in the vacuum line.

This has been found to be problematic. The introduction of the gases into the PVC vacuum line creates considerable problems for modem engines. Such engines typically include sensors for monitoring input air quality (the so called "MAP" or mass air pressure sensors) which provide output to a microprocessor which can for example adjust the fuel input to the engine accordingly. Additional sensors monitor the combustion outputs. Introducing these additional gases into the PVC means that they are put in downstream of the MAP sensors which creates an imbalance, fooling the microprocessor and causing the engine to misfire and behave poorly. Thus, in some cases, introduction of the gases creates a worse polluting engine. Considerable adjustment of the microprocessor controller is required to make resolve this issue, which increases installation and servicing costs.

SUMMARY OF THE INVENTION

What is required is a simple and inexpensive system which overcomes the problems associated with the prior art devices. Most particularly, this system should include a sealed chamber, to prevent the electrolytic solution from being lost to effects other than electrolysis. In addition, the device should include electrodes which are located well beneath the surface of the electrolytic solution, to allow the electrolytic solution to be used up without exposing the electrodes. Further the system should include an automatic shut off switch to cause the unit to stop in the event the liquid level gets low enough to expose the electrodes. In addition, most preferably the device will conduct electrolysis in a low resistance electrolysis fluid, permitting it to operate at relatively low temperatures to prevent damaging heating and cooling cycles which can impair seal integrity. As well the device should have any joints or openings in the sealed chamber formed above the highest liquid level in the chamber. In this manner, even if a leak develops, the leak will simply allow additional air into the electrolysis chamber rather than leaking out electrolytic solution. Lastly, the system should preferably compensate for loss of liquid water to decomposition to prevent over concentration of the solution, which can lead to a higher resistance cell and excessive heat generation.

Accordingly, there is provided an electrolysis cell according to the present invention comprising:
a sealed plastic body;
an outlet vent on the body;
an inlet vent on the body;
a first terminal located at a top of said body;
a second terminal located adjacent to said first terminal;
an insulated conductor associated with each terminal extending through said body and towards a bottom end thereof;
an anode operatively connected to one of said terminals; and
a cathode associated with the other of said terminals, said anode and said cathode being spaced apart from one another within said body.

BRIEF DESCRIPTION OF THE DRAWINGS

Reference will now be made, by way of example only, to preferred embodiments of the invention as illustrated in the attached figures.
FIG. 1 is a perspective view of a kit of components, including an electrical section and a fluid section, assembled according to the present invention;
FIG. 2 is a perspective view of the electrical section of FIG. 1;
FIG. 3a is a perspective view of the fluid section of FIG. 1;
FIG. 3b is the same view as FIG. 3a, shown at a different angle;
FIG. 4 shows the operator panel;
FIG. 5 is an overview of the elements of the electrolysis cell;
FIG. 6 is a schematic view of the electrode according to the present invention;
FIG. 7 is a plan view of the anode and cathode fingers, enclosed by tube-shaped isolators; and
FIG. 8 is an overview of the elements of the moisture trap.

DETAILED DESCRIPTION OF THE PREFERRED EMBODIMENTS

FIG. 1 shows a perspective view of a kit of components for providing combustion products to an internal combustion engine. The assembled kit is generally indicated with reference numeral 10, and comprises an electrical section 12, shown on top, for mostly electrical components, and a fluid section 14, shown on bottom, for mostly electrolysis and fluid handling components, all housed in a box enclosure 11. An internal shelf 16 divides the two sections and supports the electrical section 12. It can be appreciated that other configurations of the assembled kit of components are possible, in addition to the rectangular box shown, as long as they fulfil the function of housing the kit of components in a convenient enclosure.
FIG. 1 illustrates that the present invention may be viewed as a "black box" with two outer connections. One connection is a wiring harness 18, which carries a bundle of electrical wire and cable. A second connection is output hose 20, which carries generated hydrogen and oxygen gas to a vehicle internal combustion engine, not shown. For greater clarity, it may be noted that the preferred embodiment of the present invention also includes an operator panel and oil pressure switch that are located external to the box enclosure 11. These elements are discussed further below. The dimensions of the preferred embodiment of the box enclosure 11 are about 12 inches by 12 inches by 24 inches. This size is small enough to permit the assembled kit 10 to be conveniently attached, as an add-on, to one or more locations in or on a typical commercial vehicle. In a large tractor-trailer type vehicle, with an engine size of about 7-15 litres, the box enclosure 11 may be conveniently attached to the bracket that holds the fuel

tanks, outside the engine compartment. In that case the output hose 20 will be run to the engine air intake. In some cases, this distance will be about 15 feet.

FIG. 2 is a detailed view of the elements of the electrical section 12, resting on the base or shelf 16. The wiring harness 18 carries electrical power and communication signals into and out of the assembled kit 10. Included among the electrical components mounted on the shelf 16 are a C.P.U. 22, cell power supply 24, auto-refill electronics circuit 26, and relay 28.

The C.P.U. 22 may be any common programmable control device, such as a microprocessor or programmable logic controller (PLC). In the preferred embodiment of the invention, a PLC is preferred because of its low cost and relatively simple and embedded programming scheme. The PLC is typically a single chip device with a plurality of pins, most of which connect with one of the various switches, sensors, or display units that comprise some of the components of the assembled kit 10, as further discussed below.

Among the electrical signals carried in the wiring harness 18 is an input power line from the vehicle battery. This line supplies power to the C.P.U. and other digital electronic devices, and also to the cell power supply 24. The cell power supply 24 is a passive device that contains a power conditioning means in the form of a DC-DC converter to power the electrolysis process. This direct current (DC) output is at a reduced voltage and stepped-up current from the input vehicle battery power, and typically maintains a current on the order of 23-26 amps. The relay 28 opens or closes the connection between the vehicle battery and the cell power supply 24, under the control of the C.P.U. When the connection is open the cell power supply 24 is disabled and the electrolysis process is shut down. The auto-refill electronics circuit 26 is a separate circuit maintained in its own housing in the preferred embodiment. It can be appreciated however that this circuitry could be incorporated into the C.P.U. 22 if desired.

The electrical section 12 also includes a number of switches and sensors, including a temperature sensor 30, cover switch 32, inertia switch 34, and manual refill switch 36. The temperature sensor may be a simple thermistor, and in the preferred embodiment is set to activate upon the ambient temperature in the electrical section 12 rising above about 80 degrees Celsius. The box enclosure 11 also includes a removable cover, not shown, to permit access to the components of the assembled kit 10. The cover switch 32 opens if the cover is not attached or improperly closed. The inertia switch 34 responds with an open signal if the spatial orientation of the assembled kit 10 is disturbed. This could occur, for example, if the vehicle experiences a collision or other accident. The manual refill switch 36 acts to bypass the auto-refill electronics circuit 26, so that the refill function performed by the circuit may be provided, upon manual intervention, in the event of a failure by the circuit. The temperature sensor 30, cover switch 32, and inertia switch 34 connect with the C.P.U. so that, upon activation by any one of them, the C.P.U. is notified and can take appropriate action, generally consisting of shutting down the device.

The components of the fluid section 14 are shown in FIGS. 3a and 3b. These figures both show the same elements from different perspectives. Generally, the fluid section 14 of FIGS. 3a and 3b describes two paths: a water flow path and a gas flow path.
A starting point for the water flow path is water reservoir 38, which contains a reservoir of distilled water 40. The reservoir 38 is held in place by a water jug bracket 42. A water hose

connects the water reservoir to a fill pump 46 through a first section, designated 44a. The fill pump 46 mounts just below the shelf 16 through an attached mounting bracket or plate 48. The water hose continues beyond the fill pump through a second section 44b to a T-section, not visible in the drawings, that splits the water hose into two further sections, designated as 44c and 44d. Water hose section 44c connects with a first electrolysis cell 50 and, as seen in FIG. 3b, water hose section 44d connects with a second electrolysis cell 52. These connections are made through a water inlet 51 on each cell. A pair of solenoids, designated as solenoid 54 and solenoid 56 respectively, are located on either side of the T-section. Each solenoid attaches to a separate gate and acts independent of the other so that, when the solenoid is in a closed position, the path is blocked through water hose section 44c and/or 44d, as the case may be. The entry of water hose sections 44c and 44d into cells 50 and 52, respectively, marks the other end point for the water flow path in the fluid section 14.

Cells 50 and 52 are sealed chambers preferably constructed out of a lightweight, heat resistant material. In the preferred embodiment a PVC based plastic is used. Also in the preferred embodiment two cells are used to provide better flexibility and capacity in meeting the combustion needs of large commercial vehicles. However it can be appreciated that a smaller apparatus using only one cell may also be constructed, and may be advantageously used with smaller vehicles such as automobiles. The cells in the preferred embodiment are generally cylindrical and are approximately 13 inches high, with a diameter of approximately 4 inches. The output capacity of a cell is directly related to its volume, so in general a larger cell may be preferred. However, since it is also desired to minimize the size of the overall assembled kit 10 to ease installation, there is an opposing preference to keep the cell size small. It is a particular advantage of the present invention that, while keeping the cell size relatively small, it is nonetheless able to produce a useful amount of combustible gas. The discussion further below concerning the design of the internal components of the cells provides further information on how this beneficial effect is achieved. There are also 4 electrical terminals on each cell representing a cathode terminal 84, anode terminal 86, low level indicator terminal 88 and high level indicator terminal 90. Not all of these are visible in the drawings, which are marked as appropriate.

The flow path of gas 57 through fluid section 14 may be described as follows. In one embodiment of the present invention, each of cells 50 and 52 have a gas hose 6 designated 58a and 58b respectively, emanating from a gas outlet 53 located on each cell. Gas hoses 58a and 58b then attach to opposing ends of a T-section 60. A pressure sensor 62 is located at the central junction of the T-section 60. The pressure sensor 62 is of a conventional type, and is set to activate upon a pressure setting of approximately 6 psi. The gas may be optionally routed from the boost side of the vehicle turbocharger, in which case the pressure sensor would preferably be set to activate in a range of approximately 20-30 psi. The gas hose continues out of the T-section 60 as a single hose designated as gas hose 58c, and connects at its other end to a moisture trap 64. Finally, the gas flow path continues out of the moisture trap through output gas hose 20.

There is a second, preferred embodiment of the gas flow path that is not directly illustrated in the drawings but that may be readily described. In this embodiment there is no gas hose 58a, T-Section 60, or gas hose 58c. Rather, the moisture trap 64 sits directly on top of the gas output of cell 50, at gas outlet 53. Gas hose 58b, emanating from the other cell, attaches near the top and side of moisture trap 64. As there is no T-Section in this embodiment, the pressure sensor 62 would be attached to the side wall of the moisture trap. Output gas hose 20 extends from the moisture trap 64 to the engine as before. The advantages of this embodiment relate to improved efficiency in moisture capture and disposal, and are discussed below in the section relating to the design of the moisture trap. Finally, it may be noted that where only one cell is used, the first embodiment is preferred, with the pressure sensor attached to the moisture trap as in the second embodiment.

As noted above, there is an oil pressure switch 66 that is not shown as part of the assembled kit 10 or in any of the drawings. This switch is an off-the-shelf switch that is easily installed on the vehicle engine by inserting it in place of a non-functional oil gallery plug. The oil pressure switch 66 will generally activate upon the presence of any oil pressure, such as occurs upon engine start-up.

Also as noted, there is an operator panel that installs in the driver cabin. This is shown generally as 68 in FIG. 4. The operator panel has an on/off switch 70 and a corresponding power l.e.d. (light emitting diode) 72. There are also five l.e.d.'s which light up when their corresponding sensors are active. These are: low engine oil pressure l.e.d. 74, which corresponds with oil pressure switch 66, cover open l.e.d. 76, which corresponds with cover switch 32, low water l.e.d. 78, which corresponds with a sensor to be discussed below, high pressure l.e.d. 80, which corresponds with pressure a sensor 62, and high temperature l.e.d. 80 which corresponds with temperature sensor 30.

The overall system operation of the assembled kit 10 may now be described, referring to FIGS. 2, 3a, 3b, and 4.

The system is enabled by the operator, who is generally the driver of the vehicle, pressing the on/off switch 70 on the control panel. In the ordinary course this informs the C.P.U. 22 to close the relay connecting the vehicle battery input to the cell power supply 24, and alerts the operator through the power l.e.d. 72, which lights up. The system however will not start if any of the switches or sensors are activated. In particular, the engine must be running, so that the oil pressure switch detects any level of oil pressure. The cover to the box enclosure 11 must be properly closed, or there will be a disabling signal from the cover switch 32. The other sensors must also be satisfied, but are less likely to be a problem on start-up. Electrolysis is the well known technique whereby current is passed through liquid, causing it to decompose. Where the liquid is water it can be caused to decompose to hydrogen and oxygen. When the present invention is in operation, the cathode terminal 84 and anode terminal 86 of each cell receives the high current DC input from the cell power supply 24. The electrolysis process commences in each cell, and generated hydrogen and oxygen gas exits the gas hoses 58a and 58b, or, as described, exits from cell 50 directly into the moisture trap 64. Gas pressure is monitored by the pressure sensor 62, which alerts the C.P.U. if the pressure rises above a pre-set level, generally about 6 psi, or 20-30 psi if routed from a turbocharger. The presence of the pressure sensor guards against a condition such as a kink or obstruction in the gas hose, which could raise the pressure to a dangerously high level. If the C.P.U. receives a high pressure signal, it will light up the high pressure l.e.d. 80 on the operator panel and also trigger the relay 28 to turn off power to the cells, stopping the electrolysis.

The generated gas generally retains some moisture as a residue of the electrolysis process. The presence of moisture is undesirable as it acts to undermine combustion efficiency. Accordingly, the generated gas is run through the moisture trap 64 so that moisture is removed from the gas before it enters the output gas hose 20. It is preferred that most moisture is removed, and the present unit provides adequate results. Other configurations are also possible which

may remove more or less moisture, but removing less moisture might negatively affect performance of the assembled kit. In the preferred embodiment, the moisture trap 64 is made from a PVC based plastic, and is in the shape of a cylinder, about 3 inches high and 1 inch inside diameter. The internal operation of the moisture trap is discussed in greater detail below.
As will be discussed, it is possible to configure the cells so that the hydrogen and oxygen gases are separated at production. The hydrogen gas may be directed to the vehicle engine, and the oxygen either allowed to escape or re-directed as desired. One reason to pursue this course would be to avoid confusing the MAP sensors present in many vehicles, particularly passenger cars. These sensors monitor and adjust the fuel/air combination to optimize combustion efficiency. Adding oxygen through electrolysis without properly accounting for it can lead to increased pollution and reduced combustion efficiency.

As a response, the output gas from the output gas hose 20 may be preferably introduced into the engine ahead of the MAP sensors, for example at the air intake filter. In this way, the MAP sensors will be able to detect and compensate for the extra input oxygen, so that an efficient combustion can be maintained. This avoids the problems of unbalanced readings, and removes the need to substantially revise the microprocessor combustion controls on most vehicles. Thus, rather than removing the oxygen, this embodiment relies on introducing the gases upstream of the sensors to avoid the problems of the prior art.
As will be shown, the electrolysis process depends on there being an electrolytic solution inside the cells. The electrolytic solution has a substantial water component which is used up by the electrolytic process. As the water is used up, the liquid level of solution declines and needs to be replenished. In other systems, it would be necessary for the operator to stop the vehicle and manually refill the cells. This is inconvenient and inefficient, and also raises the risk that the operator may inadvertently cause damage to the device. The present invention avoids these problems by including a refill process that operates automatically and in the background. It is therefore an advantage of the present invention that it extends the length of time during which the electrolysis cells can operate without service by the operator.

As will be shown in greater detail below, when the level of liquid reaches a pre-determined low level, a signal is sent from the cell to the C.P.U. Similar to the high pressure situation described above, the C.P.U. generates a signal that activates the low water l.e.d. 78 on the operator panel, and also sends a signal to the relay that disconnects the cell power supply, shutting off the electrolytic process. Then, through the auto-refill electronics 26, the C.P.U. signals the fill pump 46 to begin pumping water out of the water reservoir 38. The C.P.U. also signals either one or both of the solenoids 54 and 56 to open their respective gates, so that the pumped water can flow into either or both of cells 50 and 52, as the case may be. The refilling continues until the level in the cell reaches a predetermined high level, at which point a signal is sent from the cell to the C.P.U. The C.P.U. then signals the appropriate solenoid to shut its gate so that no further water is permitted to enter the cell. The C.P.U. will also signal the fill pump to stop, unless it is still waiting to receive a high signal from the other cell, in which case it will stop the other solenoid and the fill pump when the second high signal is received. At that point, the C.P.U. will turn off the low water l.e.d. on the operator panel, and the system will resume as before. If the cell cannot be refilled, as for example, if the water reservoir 38 is low, a highlevel signal will not be received and the system will remain shut down.
In the preferred embodiment with cell sizes as noted, the entire refill process takes approximately one minute. During this time the operator may possibly experience a slight loss in power,

but in most cases will likely not notice any performance related effect at all. In this way, it can be seen that the electrolysis cell and assembled kit of the present invention maintain a continuous flow of combustible gas to the vehicle engine, enhancing its performance. The presence of various sensors and switches keep the system operating safely, so that combustible gas is not being produced when the engine is off, the vehicle is jarred in an accident, the cover is not properly closed, pressure builds up in the gas hose, or when the temperature has risen to a high level.

The configuration and operation of the electrolysis cells and moisture trap may now be described in greater detail. The broad elements of the electrolysis cell are shown in FIG 5. The cell 50 comprises a body 92 and lid 93, joined at a sealed rim where the body meets the lid. There are six input/output ports or terminals on the lid. The water inlet 51 receives water from the water hose 44c. The combustible gas exits the cell through the gas outlet 53, either to gas hose 58a or directly to the moisture trap 64. The cathode terminal 84 and anode terminal 86 receive high current DC power from the cell power supply 24, to drive the electrolysis process. A low level terminal indicator 88 and high level terminal indicator 90 are electrical terminals that connect to pins on the C.P.U., to alert the C.P.U. to a condition of low fluid level and high fluid level respectively.

The interior of the cell 50 may now be viewed. There is an electrolyte solution 15 that fills the interior up to a particular level. This solution is composed of an electrolyte in solution with water. Although many different electrolytes may be used, good results have been achieved with distilled water and potassium hydroxide. The potassium hydroxide acts as an electrolyte, in a known manner, to lower the resistance of the water and to improve the performance of the electrolytic cell. An operating range of potassium hydroxide to water is about 15% to 45% by weight, with a preferred range being 25-35%, and 30% being the most preferred ratio. As is known in the art, at this level the resistance of the solution is the lowest, meaning that a minimum amount of heat is generated during electrolysis. Other electrolytes may also be used such as HNO.sub.3, H.sub.2 S O.sub.4, CrO.sub.3 and the like. Notwithstanding the low resistance however the production of hydrogen and oxygen is sufficient for the beneficial effects in combustion. In addition, the concentration of potassium hydroxide noted will prevent the solution from freezing up to a temperature of about minus 70 degrees C.

The low and high level indicator terminals connect to a low level indicator rod 89 and high level indicator rod 91, respectively, inside the cell. The rods are made from 316L stainless steel, and descend vertically from the lid. The low level indicator rod 89 is longer, and therefore descends farther, than the high level indicator rod 91. The fluid level will always be somewhere between the tip of the low level indicator rod 89 on the low end, and the tip of the high level indicator rod 91 on the high end.

The cathode terminal 84 connects to an outer electrode conductor rod 95 which is a vertical rod that descends substantially into the cell. Similarly the anode terminal 86 connects to an inner electrode conductor rod 97 that descends somewhat less substantially into the cell. The conductor rods are made most preferably from stainless steel. Grade 316L stainless steel has found to yield suitable results, but other conductor material may also be suitable. Not shown on the drawing is that both conductor rods are surrounded end to end by insulation, so there is no short circuiting or electrical or electrolysis interaction between the rods and the surrounding solution. It has been found that conventional shrink wrap plastic is suitable for forming an insulation layer around the conductor rods.

Each conductor rod terminates in an electrode, preferably formed in a ring. The outer electrode conductor rod 95 terminates in an outer electrode 96, and the inner electrode conductor rod 97 terminates in an inner electrode 98. The electrodes, being extensions of the conductor rods, are constructed of the same stainless steel and are exposed to the surrounding solution. Each electrode also contains a plurality of projecting tab extensions or fingers 99 that project in a perpendicular plane. The inner electrode 98 is of smaller diameter than the outer electrode 96. The electrodes are arranged so that a finger from the inner electrode 98 is aligned with and inside of a corresponding finger on the outer electrode 96. Each such electrode pair is itself surrounded by an isolator 100. The isolators 100 act as an electrical insulator. In the preferred embodiment the isolators are tube shaped and open at each end. The isolators are generally made of standard PVC plastic tubing, about 3 inches high and 1 inch inside diameter. The preferred embodiment also uses six fingers on each electrode, enclosed as six pairs within six isolators. FIG. 5 shows only three fingers on each electrode, and three finger pairs, for clarity in visualizing the relationship between the elements.

In the preferred embodiment of FIG. 5 the cathode terminal is associated with the larger diameter outer electrode 96 and the anode terminal is associated with the smaller diameter inner electrode 98. This assignment is arbitrary and may be reversed without reservation. The preferred embodiment also shows that the fingers 99 descend downward from the inner electrode 98, but are reversed and project upwards from the outer electrode 96. Again, this assignment is arbitrary in that the outer electrode 96 could have fingers 99 that descend and the inner electrode 98 could have fingers that rise. Similarly, both electrodes could have fingers that are oriented in the same direction. It can be appreciated as well that other arrangements may be used instead of ring haped electrodes. The key requirement is that each of the anode and cathode maintain some sort of broad surface area, with edges, in close proximity to each other so that electrolysis can proceed efficiently.

Notwithstanding the above comments, there is some benefit to retaining the ring shaped electrode and finger arrangement shown in the preferred embodiment of FIG. 5. By arranging for the two rings to have fingers projecting in opposite directions, and by using a tube shaped isolator which is open at both ends, the electrodes and isolators can be kept in position easier. The isolators will be unable to slip out since they will be blocked at either end by an electrode. Not shown in the drawing are tie strings that can be looped around the electrodes and fingers to hold the elements in place. In the preferred embodiment, one tie string is tied horizontally, contacting the isolators, and two tie strings are tied in a vertical loop, contacting the two electrodes. Maintaining these elements in a tight connection is advantageous because once the lid is sealed it is not possible to open the cell to repair or reinforce a loose electrode. FIG. 6 shows an electrode 96 or 98 stretched out flat. It will be appreciated that the ends 103, 104 are joined, by any conventional means such as a spot weld 101, to form a circular loop. This loop is then secured by solder, welding, or the like to the ends of the conductor rods 95, 97. Satisfactory results have been achieved with fingers of about 31/2 inches high, 30/1000inches thick, and 3/4 inches wide. Other dimensions will also provide reasonable results, provided that a sufficient surface area of the electrodes 96, 98 is provided. It is reasonably important for smooth operation of the device to ensure that the electrodes are evenly spaced apart. Therefore, it is preferred to use at least a few spacers, not shown, in between the electrodes 96 and 98 to make sure that there is an even annular gap.

FIG. 6 also show that the fingers each have three grooves 102. The grooves are cut completely through the fingers 99 so that two new edges are formed on each side of the finger, for each groove. Because of the nature of the electrochemical reaction, gas bubbles tend to form on the edges of the plates. Therefore, forming a plate with a plurality of edges, such as the grooves 102 as shown, is believed to enhance the production of hydrogen and oxygen gas in the cell. For further clarity, FIG. 7 provides a plan view of the isolators and the cathode/anode finger pairs, viewed on edge.

An advantage of the above configuration of the cell of the present invention is that all of the terminals are placed on the top lid, while the electrolyte solution cannot rise above a predetermined maximum set below the top lid. Unlike the prior art, where the terminals project from the side of the cell, there is never any contact between the fluid and the terminals. This avoids the problem of loss of seal integrity and leaks that can occur when, as a result of continual heating and cooling of fluid the seals are caused to crack.

The operation of the electrolysis cell can now be described. With reference to FIG. 5, the electrolyte solution 15 will be at a level somewhere between the lower tip of low level indicator rod 89 and the lower tip of high level indicator rod 91. The high current DC power is applied across the cathode and anode terminals 84 and 86. The electrical charges are applied to the two electrodes, causing electrical current to flow across the gap between each cathode finger and its adjacent anode finger. The electrical current flows through the electrolyte in a conventional manner, causing the electrolysis reaction to take place, i.e. the decomposition of water into hydrogen and oxygen. The hydrogen and oxygen gas form bubbles which rise to the surface of the fluid, continue rising in the unfilled space above, and exit the gas outlet 53. The electrolysis process is enhanced by concentrating the effect in finger pairs, with extensive edge producing grooves, and by enclosing each such pair with an isolator. The isolator has the effect of minimizing inefficient electrical contact between non-adjacent finger pairs. As a consequence, this configuration and design of the present invention has the advantageous effect of reducing heat, so that more of the energy input is directed to the desired electrolysis.

As the electrolysis proceeds the fluid level will decline as water is decomposed. The potassium hydroxide electrolyte does not get used up in the reaction, and therefore does not need to be added in the usual case. However, the result is that as the water decomposes and is lost from the cell, the concentration of potassium hydroxide will increase. Once the concentration passes about 30% by weight, the resistance of the cell increases with increasing concentration of electrolyte. This in turn increases the amount of heat generated, which reduces the efficiency of the electrolysis. Another factor is that the electrodes should always be covered by the solution and should not be exposed. Exposure of the electrodes creates a risk of a spark which, in the environment containing combustible gas, could cause an explosion. In the present invention, as noted the fluid level will always be somewhere between the tip of the low level indicator rod 89 on the low end, and the tip of the high level indicator rod 91 on the high end. It can be predetermined that for fluid levels within this range the concentration of the electrolyte, and corresponding electrolysis efficiency, will be acceptable. Further, as indicated in FIG. 5, the lowest level that the fluid might reach, that of the low level indicator rod 89, can be set well above the electrodes to avoid the risk of electrode exposure. In the preferred embodiment, this distance is about 11/2 to 2 inches.

The manner in which the fluid levels are maintained within these bounds is as follows. The low and high level indicator terminals 88 and 90 are driven by a square or alternating wave from

the C.P.U. The low level indicator rod 89 will generally have contact with the electrolyte solution at its tip, and thereby will maintain some current flow, which will be sensed by the C.P.U. Conversely, the high level indicator rod 90 will generally not have contact with the electrolyte solution, and thereby will tend to appear as an open circuit to the C.P.U. When the fluid level descends below the tip of the low level indicator rod, that terminal will suddenly appear open to the C.P.U., which will inform the C.P.U. that the fluid is at a low level. Similarly, on refill, the high level terminal will suddenly close when the fluid reaches the tip of the high level indicator rod, informing the C.P.U. that the high point has been reached. Once the C.P.U. receives the information, it is straightforward for it to take the steps described earlier, i.e. turn display l.e.d's on or off, or turn the system on or off. A square or alternating wave is used to drive the indicator rods to prevent the current through the rods from becoming a part of the electrolytic process.
In another form of the present invention, the electrolysis process can be configured to separate the hydrogen and oxygen gases. This could be achieved by providing a liquid permeable but gas bubble proof barrier between the inner and outer electrodes. This barrier may be made from woven polypropylene for example. Above the barrier would be located an impermeable cowl, which could be vented by a further nozzle or vent provided on the cell lid 93. It can now be appreciated that this embodiment of the invention comprehends separating produced hydrogen from produced oxygen.

The broad elements of the moisture trap are shown in FIG. 8. In the preferred embodiment described above, the moisture trap sits directly above one of the cells, for example, cell 50, and connects with the gas outlet 53 through a first gas entry 112. In practice, this connection may also include a short section of hose 58a. The moisture trap also connects with the gas output of the second cell, cell 52, through gas hose 58b that connects to second gas entry 114, located on a side wall near the top of the moisture trap 64. Output gas hose 20 emanates from the top of the moisture trap and connects with the vehicle engine air intake.

The moisture trap 64 itself comprises three cylinders. There is a large, outer cylinder 106 that contains the first and second gas entries to receive the gas outputs of the two cells, and that connects with the output gas hose 20. There is a smaller middle cylinder 108 positioned inside outer cylinder 106, and that attaches to the inside top of the outer cylinder. The bottom of middle cylinder 108 is open. Then there is an even smaller inner cylinder 110 positioned inside the middle cylinder 108, that also attaches to the inside top. The inner cylinder 110 is open at the top, coinciding with the top of the moisture trap, and maintains an open connection with the output gas hose 20. The bottom of inner cylinder 110 is a small hole, inner cylinder entry 118. There are additionally a series of small holes, inner cylinder holes 120, located on the side of inner cylinder 110. In the preferred embodiment there are 8 inner cylinder holes 120, formed by drilling four 2 hole pairs through the inner cylinder 110. However, it can be appreciated that a different number of inner cylinder holes 120 could also be used.

In the preferred embodiment, the three cylinders are constructed from standard PVC plastic tubing. The outer, middle, and inner cylinder are respectively approximately 33/4, 31/2, and 23/4 inches in height, and approximately 21/4, 11/16, and 3/4 inches in diameter. It can be appreciated that other materials and dimensions may also be used with satisfactory results.
In operation, gas enters the moisture trap at the bottom from cell 50 and at the side near the top from cell 52. The entry of gas at opposing ends, coupled with the internal configuration of the moisture trap, being the various inner and outer walls and holes and openings of the

cylinders, combine to produce an air turbulence effect, as represented by air flow 122. The flow of air can be likened to a cyclone, in which airflow follows a circular spin and rises along a central column. The spinning air deposits moisture embedded in the gas on the internal walls of the moisture trap, where it eventually drips to the bottom and exits through first gas entry 112 to cell 50. This is represented by the arrow showing water 40 in FIG. 8. Simultaneously, the rising column of gas proceeds through inner cylinder 110 and exits through output gas hose 20. Due to the function performed by the moisture trap, the exiting gas has a reduced moisture content, which produces an improved combustion in the vehicle engine.

The main benefit of the above embodiment, in which the moisture trap is positioned directly above one of the cells, is that it automatically drains trapped moisture out of the moisture trap and into the cell. In the embodiment shown in FIG. 3 the moisture trap would have to be drained periodically to get rid of the accumulated water. This would also be the case in a single cell system. Another benefit of the above embodiment is that the entry of gas at opposing ends enhances the cyclone effect. Additionally, the return of water to the cell helps to replenish water lost to electrolysis, which reduces some of the demand on the automatic refill system and the water reservoir 38.

When the present invention is operated under cold weather conditions, as noted the presence of electrolyte acts as an antifreeze to prevent the fluid inside the cells from freezing. However, the water 40 in the water reservoir 38 may be vulnerable to freezing, particularly when the vehicle is stopped. One simple solution would be for the driver to remove the reservoir, which is often just a commonly available distilled water jug, when the vehicle is at rest. This solution is facilitated by the mounting of the reservoir or jug in the water jug bracket 42. Another possibility is to put a small amount of electrolyte in the water reservoir. This may require careful monitoring of the level of electrolyte in the cell. To avoid over-concentration, the system could also be designed to constantly cycle fluid from the cell to the reservoir. In that case the fill pump would always be in operation. Yet another possibility would be to cover the water reservoir with a thermal blanket, powered by the vehicle battery. The power requirement for this however is quite large. Finally, another solution would be to mount the cell power supply in close proximity to the water reservoir. The heat of the power supply could be used advantageously to thaw the water in the reservoir, if frozen. Results from installation of the present invention in actual vehicles are provided below.

EXAMPLE

This same vehicle was tested for gas mileage. Typically, without the unit, highway mileage was 10.0 kilometres per litre. Results of two trials with the unit in place, and activated, yielded 15.29 kilometres per litre and 17.07 kilometres per litre respectively, and average increase of about 61.8%. This was all highway driving, and with air conditioning on.

EXAMPLE 2

In this example a 1994 Volvo with a 460 Detroit engine was subjected to a series of opacity tests to measure the cleanliness of the exhaust. The tests were conducted using a Cal-Test.TM.1000 Smoke meter, and followed the Society of Automotive Engineers SAE J1667 procedures and standards, which is also the EPA standard for opacity testing. The results of four tests conducted without the kit according to the present invention installed were:

Average Opacity Range:

1.	20.8%	4.9%
2.	18.1%	0.3%
3.	21.3%	3.4%
4.	23.0%	3.3%

A kit according to the present invention was then installed in the subject vehicle, and the following seven results were obtained upon repeating the opacity test:
Average Opacity Range

1.	10.3%	1.8%
2.	13.3%	3.2%
3.	14.0%	0.9%
4.	12.4%	2.4%
5.	12.7%	3.2%
6.	11.8%	3.9%
7.	11.9%	2.1%

The above results indicate that the average opacity was substantially reduced after the unit was installed.
The most preferred form of the present invention is in the form of an after market add-on kit to an existing automobile. However, it will be appreciated by those skilled in the art that the unit can also be installed by OEM's as a factory installation and achieve the same results. The sealed electrolysis chamber merely needs to be installed under the hood, in the trunk or on the frame of an H.G.V. unit and appropriately connected.

It will be appreciated by those skilled in the art that the foregoing description was in respect of preferred embodiments and that various alterations and modifications are possible within the broad scope of the appended claims without departing from the spirit of the invention such as operating under full vacuum with the necessary modifications. For example, while reference is made to an electrolyte solution made with potassium hydroxide, other forms of electrolyte solutions will also yield reasonable results. Also, while reference was made to the electrodes being made with stainless steel, other materials such as titanium plated with platinum may also be used. Further, a third electrolysis cell may be added, which is activated upon an increase in load to the vehicle engine. Various other modifications will be apparent to those skilled in the art but are not described in any further detail herein.

4.0.4.5. Stowe Gene B; US #: 5,231,954; August 5, 1992;

Hydrogen/oxygen fuel cell

An electrolysis cell is provided for use in connection with a combustion engine, for generating hydrogen and oxygen gases which are added to the fuel delivery system as a supplement to the gasoline or other hydrocarbons burned therein. The hazard of explosion of the mixture of generated gases is eliminated by withdrawing the gases through a connection with the vacuum line of the positive crankcase ventilation (PCV) system of the engine and by utilizing a slip-fitted top cap for the electrolysis cell, which cooperates with the PCV vacuum line to prevent explosive containment of generated gases in case of accident. Use of the generated gases as a fuel supplement enables substantial increases in fuel efficiency, while at the same time reducing the emission of pollutants.

BACKGROUND OF THE INVENTION

This invention relates generally to the production of hydrogen and oxygen in a closed electrolytic chamber, filled with an aqueous electrolyte solution, and working with electrodes connected to a source of electrical potential. The invention is useful in automobiles, trucks, stationary engines, tractors, industrial plants, trains, ships, airplanes, generating plants, and all other places where fossil fuel is burned as a source of energy. The invention will be described herein with specific reference to its use in an automobile engine.

At the present time there are two major problems facing the nation with respect to the operation of the millions of automobiles, trucks, buses, and the like which are currently in use. One of these problems is the pollution of the atmosphere caused by the noxious gases generated as by-products of combustion in the engines of these vehicles. A few of these are defined as carbon monoxide (CO), nitrous oxide (NO.sub.x), unburned hydrocarbons (HC), sulfur dioxide (SO.sub.2), and so on. During the past 20 years, considerable effort and expense have been devoted to resolving this evergrowing problem.

The second problem deals with an increasing srtage of the fossil fuels on which vehicles operate, and a very substantial amount of work has been done with the objective of increasing the efficiency of existing engines so as to use less fuel, as well as searching for alternative sources of energy for the vehicles.

It has been recognized for some time that hydrogen as a fuel has numerous advantages over fossil fuels. In burning, it releases heat energy almost three times greater than any other fuel. It burns clean, producing only water as residue. It can be made from water almost any place on earth by several processes, one of the most convenient being by electrolysis of water. However, the 100% substitution of hydrogen for gasoline or other fossil fuels in vehicle engines presents practical problems which have delayed commercial acceptance. A hydrogen tank is an explosion hazard. Also, the energy required to convert water to hydrogen in itself requires the burning of fossil or other fuels, with accompanying reduction in existing fuel supplies and accompanying increase in pollution or other hazards. As an extension of the above concept, there has been additional research in the prior art to evaluate the practical utility of hydrogen as a fuel supplement in existing systems. It has been found that when hydrogen is mixed with gasoline and air in the combustion chamber of a conventional vehicle engine, there is an improved combustion. The result is substantially improved thermal efficiency and a marked reduction of noxious emissions. However, to provide a tank of hydrogen adjacent the engine to supplement the gasoline supply presents the same difficulties as involved with hydrogen as a primary fuel, except of course on a smaller scale. Therefore, over the past decades there has been additional work on the concept of providing an electrolysis chamber under the hood of the vehicle, adjacent the engine, for providing hydrogen on an as needed basis, and using electrical energy from the battery and electrical system of the vehicle to perform the electrolysis. While this work has confirmed certain theoretical advantages of hydrogen supplementation, it has not yielded a practical, workable system, since the technology has been known for some time but has not come into common use. The lack of public acceptance has been due to the fact that the systems proposed in the past have been characterized by excessively heavy and oversized units, the use of high pressure, the need for heating, cooling, fanning, purging, or filtering, the use of heavy cabling and precious metal electrodes, and the need for extensive modifications of the existing vehicle engine. Even more important, there has been the safety hazard presented by the potential for explosion of accumulated gases in the event of unusual occurrences, such as collision of the vehicle or inadvertent turning off of the engine while the generation of hydrogen and oxygen still continues. It is an object of the present invention to provide a new and improved hydrogen supplementation system which overcomes or minimizes the above-mentioned disadvantages of previously known systems. More specifically, it is an object to utilize the existing source of electrical potential in the engine to decompose water to provide hydrogen and oxygen which is used in the engine, thereby greatly reducing air pollution and increasing fuel efficiency. It is a further object of the invention to provide a system which is inexpensive, readily installed and maintained, without modification of the existing engine, and which includes simple mechanisms for eliminating the hazard of explosion. Other objects and advantages will become apparent as this specification proceeds.

SUMMARY OF THE INVENTION

The present invention relates to a hydrogen supplementation system for an engine, comprising an electrolysis chamber located adjacent said engine, said chamber having a securely bonded bottom and a friction-fitted top cap, removable by internal ga pressure; an aqueous electrolyte solution partially filling the chamber and leaving a gas accumulation zone in the chamber above the electrolyte level; a pair of electrodes disposed within the chamber and at least partially immersed in the electrolyte solution, said electrodes being electrically connected to opposite sides of the battery or other source of electrical potential in said engine, whereby hydrogen and oxygen are generated from the water in said electrolyte; and a hydrogen/oxygen delivery line connected at one end to the gas accumulation zone in the electrolysis chamber and at the other end to the vacuum line in the positive crankcase ventilation (PCV) system of the engine, whereby hydrogen and oxygen generated in the electrolysis chamber are withdrawn immediately by the vacuum effect in the PCV vacuum line and fed into the intake air manifold of the engine.

The apparatus of the invention is extremely simple and has no moving parts. It is made of inexpensive, readily available materials. It is installed merely by attaching the electrode wires to opposite poles of the battery and installing a T-joint in the PCV vacuum line of the engine. No modification of the engine is required.

Further, it incorporates the unique feature of a friction-fitted top cap for the electrolysis chamber, which provides automatic secure containment during normal operation of the engine, but provides pressure release under abnormal conditions. Thus, during normal operation, the negative pressure in the PCV vacuum line pulls the top cap down securely on the electrolysis chamber, thus preventing escape of generated gases. However, in unusual situations where the engine may stop but the generation of hydrogen and oxygen continues, the cessation of the vacuum effect in the PCV line loosens the top cap so that it will pop off if there is a build-up of gas pressure in the electrolysis chamber, thereby eliminating the confinement necessary for explosion. This feature, together with the special combination of electrolyte components to be discussed hereinafter, eliminates the explosion hazard which hampered past efforts. Addition of hydrogen and oxygen to the fuel supply of the engine by use of the present invention enables a substantial improvement in fuel efficiency and mileage per gallon, as well as a striking reduction in noxious gases emitting from the engine.

BRIEF DESCRIPTION OF THE DRAWINGS

In order that the invention may be better understood, a description of the invention is provided herein with reference to the general concepts and an illustrative embodiment thereof, wherein:

FIG. 1 is a diagrammatic view of an automobile engine, showing incorporation of the electrolysis device of the present invention. FIG. 2 is a perspective view of the electrolysis device of the invention.

FIG. 3 is an exploded perspective side view of the electrolysis device, showing top and bottom caps separated from the main body, and indicating the location of electrodes, gas accumulation zone, gas delivery line, and the like.

DESCRIPTION OF THE PREFERRED EMBODIMENT

Referring now to the drawings, wherein like reference characters denote corresponding elements throughout the several views, and first to FIG. 1, an internal combustion engine of the piston type in which fuel is ignited by spark plugs is shown as including an engine block represented at 10. Mounted on engine block 10 is a fuel intake manifold 11 having a main stem 12 on which is mounted a carburetor 13 for hydrocarbon fuel such as gasoline. Mounted above carburetor 13 is an air filter 14 having an air intake 15. Carried by engine block 10 is an exhaust manifold 16 from which extends an exhaust pipe 17. Engine block 10 includes a cooling system in accordance with accepted practice and hence is not illustrated here. However, a radiator and a fan which may be considered as part of a cooling system are illustrated at 18 and 19 respectively.

The engine includes a positive crankcase ventilation (PCV) system, in which a source of air is drawn from the air intake 15 through a tube 20 into the oil filler cap assembly 21, from where the air flows past rocker arms and pushrods (not shown) into the crankcase 22. The air and accumulated crankcase gases then enter a spring-loaded regulator valve (PCV valve, not shown), from where the air and gas mixture is routed from the crankcase 22 through a crankcase vent hose tube 23 to the main stem 12 of the intake manifold 11, from where the crankcase gases may be burned with the incoming fuel and air mixture. The crankcase vent hose tube 23 is a vacuum tube and creates a negative pressure on the system continuously while the engine is running.

The engine includes an associated fuel tank (not shown) from which gasoline or other fuel is drawn through line 24 by fuel pump 25 and introduced into the carburetor 13.

The engine also includes a battery 26 as a source of electrical potential, together with associated wiring and switching. An ignition key switch 27 is adapted to supply energy from the battery 26 to the cranking motor 28 to activate the flywheel 29 to turn over the engine upon starting the vehicle.

An important feature of the invention is an electrolysis canister or chamber 30, which is shown in the diagram of FIG. 1 and in greater detail in FIGS. 2 and 3. The chamber 30 illustrated in the drawings is formed as a waterproof cylindrical casing 31, made of a chemically and electrically inert material, such as high impact plastic, tempered glass, glazed lava, or the like.

Chamber 30 is not restricted to a cylindrical shape, but may have any suitable configuration, including square, rectangular, or custom fitted, depending upon its location adjacent the engine block 10. As shown in the drawings, casing 31 has a bottom cap 32 which is permanently and securely adhered to the casing body, and a top cap 33 which is slip-fitted on the casing 31 and held there by friction. To assist in maintaining a seal in the slip-fitting, an O-ring seal 34 is built into the side of the top cap.

Located within the casing 31 are a cylindrical stainless steel cathode 35, which may be formed as an inner liner for the casing 31, and a cylindrical stainless steel core anode 36, which is secured concentrically of the cathode cylinder 35. The anode 36 is supported by a pair of stainless steel bolts 37 and 39 which are secured to the casing 31. Bolt 37 is insulated from contact with cathode 35 but is electrically connected to anode 36 at one end and to electrical wire 38 at the other end. Wire 38 runs through a fuse box 38A and then connects with wire 39, which leads through ignition key switch 27 and connects with the positive pole of battery 26. Bolt 39 is insulated from electrical contact with both cathode 35 and anode 36, and acts merely as a second support member for holding anode 36 in place. A second wire 40 is in electrical contact with cathode 35 and leads to the negative ground pole of the battery 26, or vehicle frame, if grounded.

As shown in FIG. 3, the electrolysis chamber contains an aqueous electrolyte solution 41, which is normally filled to a level 42 above the top of cathode 35 and anode 36. When current is applied and passes through the electrolyte solution between the electrodes 35 and 36, the water in the solution is decomposed to produce hydrogen and oxygen gas, which rises upwardly above the electrolyte level 42 and collects in a gas accumulation zone 43. Hydrogen and oxygen which reach the gas accumulation zone are instantly drawn off through a gas outlet line 44, connected to an opening in top cap 33. The line 44 is connected at the other end to the crankcase vacuum hose 23 of the engine, through a T-joint 45, and accordingly the hydrogen and oxygen gases generated in the electrolysis chamber 30 are conducted into the main stem 12 and into the intake manifold 11 of the engine. A back flash arrestor valve 46 is located in line 44 to prevent accidental explosion of hydrogen and oxygen gases in the event of engine backfire.

The top ca 33 of the electrolysis chamber 30 is fitted with an intake air adjustment valve 47, which permits emission control mechanics to mix air with the accumulated hydrogen and oxygen gases in such proportions as may be needed to conform to existing emission control regulations, as applied to the particular type and size of engine. An optional air cooling tube 48 extends from the top cap 33 and terminates at a point below the surface 42 of the aqueous electrolyte solution 41, allowing, if desired, an additional supply of air to be drawn into the solution and to assist in liberation of hydrogen and oxygen gas bubbles from the electrodes. The top cap 33 is also fitted with a thick fiber splash guard membrane 49 to prevent liquid electrolyte from entering the gas outlet line 44, while at the same time permitting the generated gases to pass through it.

The size of the canister or electrolysis chamber 30 may vary according to the size of the engine to which it is attached. For smaller cars having a four cylinder engine, the recommended size of the canister is about 31/2 inches in diameter, with a height of about 8 to 12 inches. For six cylinder cars, an appropriate size is about 41/2 by 10-12 inches; and for eight cylinder cars and trucks, the size is in the range of about 61/2 by 10-12 inches. Diesel trucks, stationary engines, motor homes, tractors, boats and large electrical generators can use an 81/2 by 24-36 inch size, mounted either vertically or horizontally.

In order for current to be passed between the electrodes 35 and 36, it is necessary that the solution filling the electrolysis chamber be something other than distilled water. For the purposes of the present invention, it is sufficient that a small amount of electrolyte be present in the water. For example, an electrolyte solution can be made by mixing small quantities of phosphoric acid (food grade), sodium perborate (to supply extra oxygen), and acetanilide as a stabilizer, in deionized or distilled water. The quantities of these chemicals may be varied between rather wide ranges, the objective being to provide reasonable flow of current between the two electrodes. Preferably, the above electrolyte solution in the electrolysis chamber comprises between about 0.05 to 0.1% of the total solution in the chamber, although lesser greater amounts may be used with some decrease in effectiveness. An illustrative example showing preparation of a suitable electrolyte concentrate is given in Example 1, following later in this specification.

The procedure for initial installation of the electrolyte solution in the electrolysis chamber comprises filling distilled or deionized water to the liquid level 42 above the top edges of the electrodes 35 and 36, and then adding electrolyte concentrate with a syringe or dropper until a reading of 1.5 amperes is obtained with the engine running. Usually, this amperage may be obtained by using 1 to 1.5 ounces of concentrate (prepared as in Example 1) per liter of distilled or deionized water in the chamber. If the vehicle is intended for long trips or hard usage, the initial addition of electrolyte concentrate may be increased to obtain a greater amperage reading, preferably in the range up to 3.0.

After the initial installation of the electrolyte solution, as above, it is only necessary to add distilled water on an occasional basis to maintain the unit in operation. Under normal usage, this involves adding distilled about every 30 days or one thousand miles of driving. Adding the water may be accomplished by removing the slip-fitted top cap 33 and pouring in the water to fill up to the top level line 42. The initial charge of electrolyte will last for about one year, or about 10,000 miles of driving, under normal conditions.

As demonstrated above, the electrolysis unit of the present invention is inexpensive and simple to install and maintain in existing engines. It has no moving parts. It has two wires leading to the battery, and a single hose connection installed in the PCV vacuum line by a simple T-joint connection. Electrical current to the system is actuated by turning the ignition switch key to start the engine. Hydrogen and oxygen are generated as long as the engine is running. When the key is turned to the off position, the motor stops, and so does the generating of hydrogen and oxygen gases.

Although simple and inexpensive in structure, the system of the present invention effectively avoids the explosion hazard which overshadowed the use of prior devices. An important element in achieving this is the feature of using a friction-fit top cap 33 in combination with use of the vacuum tube of the PCV system. When the engine is running, the top cap is pulled down tightly on the canister by the negative pressure in the PCV vacuum line 23, and generated gases cannot escape but rather are drawn directly into the engine intake manifold where they are immediately burned with the standard fuel mixture. When the engine stops, the top cap 33 is no longer under negative pressure and is easily removed. Therefore, in the event of abnormal conditions, where the engine might be stopped, but the ignition key not turned off (as in the case of accident or repair work on the electrical system), the continued generation of hydrogen and oxygen gases without being consumed in the engine will not cause a dangerous build-up of gases in the canister, because the top cap 33 will readily pop off, thus eliminating the

confinement condition that is necessary for an explosion. Added to this safety factor is the air adjustment valve 47 which is always in an open position on cap 33 and therefore acts as a safety relief valve under the abnormal conditions described above. An even further safety feature is contributed by the constitution of the electrolyte solution, which has been found to generate other substances which decompose at a uniform rate and condition the released hydrogen and oxygen gases against explosion but do not interfere with the high heat energy of the hydrogen gas.
Use of the electrolysis unit of the present invention effectively addresses the major problems currently facing the nation with respect to the operation of fossil fuel powered vehicles. The high heat energy of the mixture of conditioned hydrogen and oxygen gases generated in this unit, when added as a supplement to other hydrocarbon fuels, causes the unburned portions of that fuel to burn completely, thereby effecting a striking reduction in the concentration of noxious gases in the emissions. Further, a substantial improvement in gas mileage is obtained, thereby contributing substantially to the solution of the fuel shortage problem, and since less fuel is used overall, even less pollution is added to the atmosphere. Tests showing the improvement in mileage and pollution reduction are described in Examples 2 and 3, set out later in this specification.

The following examples illustrate certain specific embodiments of the invention. It will be understood that the invention is not limited to the specific materials or proportions given, but comprehends all such modifications and variations thereof as will be apparent to those skilled in the art.
The mixture was agitated until all chemicals had dissolved. The above solution was diluted with deionized distilled water to 3 gallons and then poured into an electrolyte cell and charged at 150-200 amps for 24 hours. The solution was then removed and filtered through diatomaceous earth, and stored as required. Usually one ounce of this concentrate per liter of distilled water produces electrolyte have a pH of 5 and is sufficient to produce 1 amp at 12 volts, when used in the electrolysis unit of the present invention.

The device of the present invention provides the following features which are significantly advantageous in terms of simplicity and safety of the device and effectiveness in the field of fuel consumption reduction and emission control:

1. The device is extremely simple and inexpensive in design. It has no moving parts. To install on an existing gasoline engine requires only attaching the two electrical wires to the battery and the outlet hose to the PCV vacuum line of the engine. The installation takes less than 30 minutes, and no modifications are made to the engine.

2. In spite of its simplicity, the device is extremely safe. There is no need for storing explosive hydrogen. It is generated on an as-needed basis. The unique combination of a slip-fitted top cap attached to the vacuum line of the PCV system provides constant removal of hydrogen from the electrolysis cell, while at the same time ensuring that, in the event of accident, no hydrogen is confined in an explosive state. Other factors, such as the release valve role played by the air inlet valve, and the anti-explosion conditioning contributed by the particular electrolytes utilized, contribute to the safety of the device.

3. In use of the device, the only consumable is water (and minute quantities of inexpensive electrolytes). No fossil fuel or other pollutant-causing sources of energy must be used to provide the electricity for electrolysis of the water into hydrogen and oxygen. The electricity is generated on site in the vehicle by operation of the engine.

4. The friction-fitted top cap of the electrolysis chamber provides a number of advantages. Although loosely fitting, it is drawn down into a tight-fitting position by the negative pressure in the PCV vacuum line in normal operation of the engine, but when the engine stops the top cap becomes loose again, thereby being easily popped off in the event an unwanted accumulation of gases occurs in the electrolysis chamber. Also, the removable feature of the top cap provides ready access for inspection of the interior of the electrolysis chamber, or for adding make up water or electrolyte.

5. When used as a supplement to the hydrocarbon fuel, the mixture of conditioned hydrogen and oxygen, because of its high heat energy, causes the hydrocarbon to burn more completely, thereby greatly reducing hydrocarbon emission while developing more horsepower, increasing miles per gallon, and contributing overall to a greater fuel economy. The improvement of gasoline mileage contributes substantially to solution of the fuel shortage problem, and since less fuel is used overall, a second advantage is that less pollution is added to the atmosphere.

6. Burning the conditioned mixture of hydrogen and oxygen gases produces high temperature steam. Accordingly the exhaust gases from the engine are steam cleaned and have substantially lower concentrations of combustible particles, thereby contributing even further to solution of the pollution problem. lthough the present invention has been disclosed in connection with certain preferred embodiments thereof, variations and modifications may be made by those skilled in the art without departing from the principles of the invention. All of these variations and modifications are considered to be within the true spirit and scope of the present invention as disclosed in the foregoing description and defined by the claims.

4.0.4.6. Teves Antonio; USP #: 5,513,600;

May 7, 1996 ~ US Cl. 123/3 Water Fuel Converter for Automotive and Other Engines

Device and method of generating hydrogen from water and utilizing simultaneously the generated hydrogen gas as alternative fuel or supplemental for automotive and other engines as means to replace up to at least as much as 80% of the hydro-carbon fuels used by such engines. The hydrogen generating device comprises an electrolytic cell or combination of two or more cells energized by a high density direct current of as much as 5,000 amperes, such electrical energy derived from the automotive engine by transforming mechanical energy to electrical energy by means of a direct current generator. The electrolytic cell or cells is supplied by a continuous feed water supply system. Increased capacities are possible due to high amperage loads attainable by the electrolytic cell without overheating. This is necessary to produce the requisite amount of hydrogen gas fuel capable of operating automotive and other engines, for example, with a fuel mixture of hydrogen and only 20% by volume of the gasoline fuel usually used in the engine, after a steady state condition is achieved. The electrolytic cell or cells are equipped with means to control energy load, water flow, gas flow, gas pressure, and presenting the hydrogen gas fuel into the combustion chambers of the automotive and other engines.

BACKGROUND OF THE INVENTION

1. Field of the Invention

This invention relates to an efficient water fuel converter which converts water into hydrogen and oxygen whereby the generated hydrogen gas is utilized simultaneously as an alternative fuel to replace up to at least 80% of the hydrocarbon fuels or other synthetic fuels with the hydrogen fuels used by automotive and other engines. For example, the fuel generated from the system can replace up to 80% of the volume of gasoline admixture normally used in an automobile engine. Recycle of the oxygen to the combustion chamber can reduce undesirable combustion by-products, such as nitrogen oxide.

2. Description of the Prior Art

Several patents pertaining to utilization of hydrogen gas as a source of fuel for automotive and other engines were not well-appreciated by vehicle owners because of several drawbacks, disadvantages, and inherent defects in the system. Some were very cumbersome, utilizing the ready-made hydrogen contained in heavy steel cylinders (U.S. Pat. Nos. 4,508,084; 3,983,882; 4,178,882), while others dealt with generation of hydrogen on a very limited scale insufficient to replace a majority (and even at least about 80%) of the total volume of fuel requirements of automotive and other engines. Other patents (U.S. Pat. Nos. 4,597,363; 4,368,696; 4,489,864; 3,458,412; 3,242,665; 4,203,814), generate very limited quantities of hydrogen from chemicals and other sources insufficient to supply a majority to at least about 80% of the total fuel needs of automotive engines. Still another invention (U.S. Pat. No. 4,036,181) describes the use of metal hydrides, particularly magnesium hydride, in generating hydrogen gas as fuel for automotive engines. However, the drawbacks of this invention are: 1) the metal hydride is expensive; 2) the process of generating hydrogen is complicated and involves costly equipment; and 3) the method of refuelling is inconvenient and time-consuming. Further, the process of regenerating the spent hydride involves costly and complex operations.

Another invention (U.S. Pat. No. 4,763,610) relates to a gas generator which generates hydrogen from a 30% solution of sodium hydroxide (30% NaOH). The generated hydrogen is not utilized directly, but is subsequently mixed with the petroleum- based fuel in an engine component before it can run an engine. This method has several drawbacks, among which are the following: 1) the gas generating device has a limited capacity because it can only generate a small amount of hydrogen gas that can not replace at least about 80% of the petroleum fuel needed by the automotive engine; 2) the products of combustion still contain appreciable amounts of pollutants due to the higher proportion of petroleum base fuel present; e.g., (CO 0.7%; NO 2 8.9%; unburnt hydrocarbon fuel 13.8%). The large amount of unburnt hydrocarbon fuel not only increases pollution, but is actually energy lost in the combustion process; 3) the process involves relatively high concentration of sodium hydroxide (30% NaOH), which is prohibitively expensive when compared to the cost of pure gasoline or diesel fuel. All these schemes of hydrogen generation share two serious problems: 1) the generator is not designed to operate a continuous feed system necessary to increase output or production of hydrogen from the cell; 2) the hydrogen generator is not designed to operate at high current densities in order to produce sufficient hydrogen to replace at least about 80% of the hydrocarbon fuel used by automotive and other engines.

Another invention (U.S. Pat. No. 4,609,120) dealt with photo electrolytic production of hydrogen only on a very limited scale, but this method is not commercially viable and not applicable to automotive and other engines.

Still another invention (U.S. Pat. No. 4,099,489 by Bradley) deals with generation of hydrogen in small quantities to be combined with the hydrocarbon fuel whose prime purpose is reduction of pollution, but not to replace at least about 80% of the petroleum fuels used by automotive and other engines. This patent has several drawbacks and disadvantages, including the following: 1) the method utilizes expensive equipment such as turbine, high pressure pumps, water purifier, flow and pressure control instruments, DC and A.C. generators, condenser, etc., in addition to the costly high pressure electrolytic cell used; 2) the method employs two sets of generators and a rectifier unit which complicates transformation of energy from mechanical to electrical energy thereby greatly reducing overall efficiently; 3) the complex method and equipment used in producing a small quantity of hydrogen to replace an even small portion of hydrocarbon fuel required to run the engine with the object of simply reducing the pollutant emissions to a very small degree will result in a prohibitively high fuel cost; 4) the pollutant effect of the hydrocarbon fuel still present in the combustion process will remain unabated and will continue to be a problem; 5) no laboratory test on the emissions of the exhaust of an engine using Bradley's method have been conducted or reported.

Considering the drawbacks of Bradley's invention and other cited in the foregoing, the best alternative to conserve the energy resources of the United States and eliminate pollution is to replace a major portion (e.g. 81%) of the hydrocarbon fuel with relatively non-pollutant fuel such as hydrogen, which is the object of the present invention.

SUMMARY OF THE INVENTION

When percentage is expressed herein it refers to percent by volume. The present invention comprises utilizing an efficient hydrogen generator to convert water into hydrogen and oxygen in sufficiently large quantities capable of supplying (at steady state) a major percentage up to at least about 80% of the volume of fuel normally required by an automotive or other internal combustion engine by passing a high density direct current through water contained in an electrolytic cell or water fuel converter, in the range of 50 to 5,000 amperes, whereby the generated hydrogen is utilized simultaneously by the automotive or other engines, the hydrogen gas passing through a flash back preventer, and thence into a hydrogen gas collector tank, carburettor adapter and finally to the carburettor of the gasoline engine. For diesel and other fuel injection types of engines, the hydrogen gas is simply introduced into the respective fuel lines of these engines. For gas turbine engines, the hydrogen gas is introduced directly into the combustion chamber of the engine.

The drawbacks of the inventions mentioned in the preceding Description of the Prior Act (U.S. Pat. No. 4,763,610 and others) are solved or overcome in the present invention by incorporating the following features: 1) the electrolytic cell or cells in the present invention are designed for a continuous feed system which enables the cells to maintain the anodic level necessary for safe operation even at high amperage loads or high current densities in the range of 50 to 50,000 amperes; 2) the direct current supply used is in the range of 50 to 5,000 amperes, which amperage is capable of generating sufficient hydrogen gas fuel which can supply (at steady state), a majority up to at least about 80% of the total liquid volume fuel needs of automotive and other engines.

One object and advantage of this invention is that the emissions resulting from the combustion of hydrogen are relatively non-pollutant, thereby greatly reducing CO and unburned hydrocarbons by as much as 65%. Still another advantage of internally generated hydrogen as a primary source of fuel and recycling the generated oxygen is the reduction of undesirable nitrogen pollutants due to the decreased consumption of air as an oxygen source.

A feed pump continuously supplies water into the electrolytic cell, passing through a feed tank and a constant level and flow control device to maintain anodic level inside anodic chamber while excess water flows back to the sump tank by way of outlets at the bottom of the cathodic chambers.

The electrolytic cell is designed as a compact unit, comprising a rectangular body or frame made of material such as bakelite, a graphite carbon anode perforated and grooved for fast and easy circulation of anolyte water inside the anodic compartment; a perforated steel cathode with back up compartment to hold the hydrogen gas and cathodic liquid; a set of asbestos diaphragms to separate the anodic from the cathodic compartments placed at both sides of the frame fitted with gaskets at both sides to form a tightly sealed inner and outer compartment which are bolted together with the cathodic plates in place.

The graphite carbon anode is fitted loosely into the frame so that water can continuously enter the anodic compartment of the cell; the mild steel comprising the cathodic chambers has holes at the bottom for excess water to pass through the sump tank, while holes at the top of the cathodic chambers serve as exit for the hydrogen gas to pass through continuously into the flash back preventer, thence to the hydrogen gas collector tank and finally into the carburettor through the carburettor adapter of the carburettor type of engine and gas turbine engines by way of the two-way fuel selection valve and Y-connection element of the routing device. Similarly, the generated oxygen can be recycled to reduce the quantity of air needed for combustion (at steady state). By "steady state" is meant the operation of the engine combustion after start-up and sufficient operation to achieve generation of sufficient hydrogen to replace at least about 81% of the volume of gasoline normally used at that point in the operation of the engine. Although there is a consumption of energy in converting gasoline to electricity, and water to hydrogen, the advantages of the invention overcome this loss by an overall more efficient combustion.

The water fuel converter includes an electrical power source or supply such as a direct current generator of 50-5,000 amperes direct current output rating run by the automotive engine connected by means of a rotational energy connecting element.

This invention operates initially during start-up on a dual feed system whereby the carburetor adapter is fitted side-by-side with the carburetor of a gasoline engine to convert the engine from gasoline (liquid) feed to hydrogen gas (gas) feed by means of a two-way fuel selection valve and Y-connection element. In such manner, the gasoline fuel can be decreased or even shut off simultaneously and hydrogen gas introduced without stopping the engine. For diesel, gas turbine and other fuel injection type of engines, no carburetor adapter is required because the hydrogen gas is simply introduced into the fuel lines of these engines by means of the two-way fuel selection valve and Y-connection element with appropriate means to present the hydrogen gas (and, if desired, the oxygen) into their respective combustion chambers.

At the initial start-up, the engine is run first with the gasoline fuel available, but as soon as sufficient amount of hydrogen gas is stored in the hydrogen gas collector tank, the gasoline fuel gradually is closed to a point where only 19% of the gasoline fuel is left in admixture with 81% of the gasoline fuel originally used before introduction of hydrogen gas, while simultaneously opening the hydrogen gas fuel into the combustion chamber of the engine. For an LPG gas fuel operated engine in use, the automatic switching mechanism with the two-way fuel selection valve and Y-connection element is simply used to change from the throttle and adjust the LPG gas valve which is mixed with the hydrogen gas fuel generated from the cells at any point along the fuel line.

For subsequent start ups, the hydrogen gas stored in the hydrogen gas collector tank could be able to run the engine easily with the minimal supplement of gasoline (i.e. 19%) diesel fuel, or LPG gas. In the automobile, the water sump tank is simply installed beside the gasoline tank, while the electrolytic cell is installed as a compact unit in the back compartment of the car.
In operation, water is first treated with an alkali to obtain a pH range of 7.1-14. The water, thus activated, is fed continuously into the electrolytic cell from a feed tank through a constant level flow control device, the feed tank being supplied continuously with activated water from the sump tank by means of a 6-12 volts DC electric pump. High density direct current in the order of 50-5,000 amperes is then supplied to the electrolytic cell through the respective anode and cathode connections with current density adjusted by means of a variable power supply control device to provide the amperage loads required for a particular automotive engine model and horsepower. The hydrogen gas generated from the cell is utilized simultaneously by the automotive engine passing through the exit tube, flash back preventer, then to the hydrogen gas collector tank, two-way fuel selection valve, Y-connection element, carburettor adapter, and finally to the carburettor of the automotive engine; e.g., with minimal supplement of gasoline, diesel, or LPG gas. The oxygen, liberated and separated at the anodic compartment, is pumped by a DC electric pump to the carburettor of the engine or, less desirably, simply vented into the atmosphere. Check valves before and after the pump provide safety measures to prevent back flushing.

BRIEF DESCRIPTION OF THE DRAWINGS

FIG. 1 is a Perspective of the Water Fuel Converter.

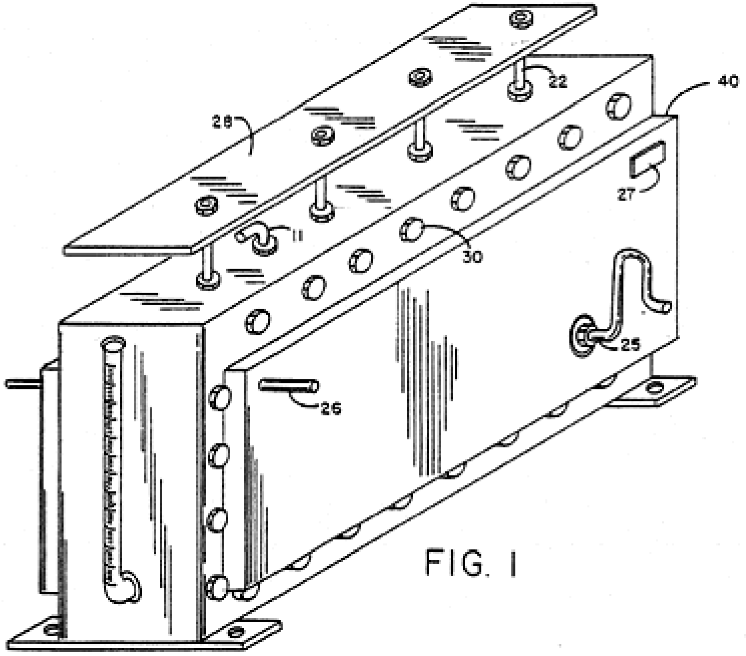

FIG. 1

FIG. 2 is a Schematic Diagram showing the complete set-up of the device for generating hydrogen from water and presenting the hydrogen gas to the engine.

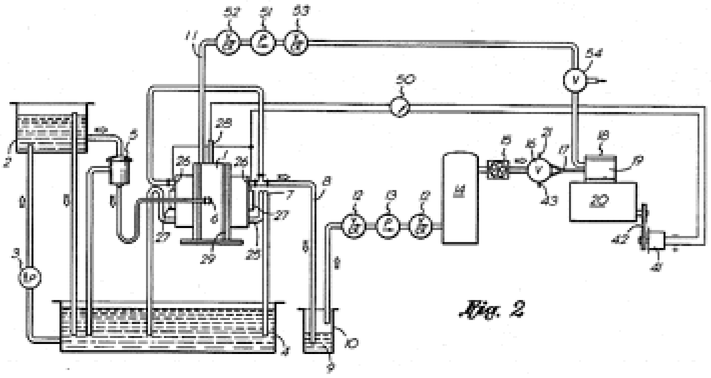

Fig. 2

FIG. 3 is a cross-sectional view of the Electrolytic cell showing the position of the graphite carbon anode in the anodic chamber, connection of the positive terminal to the graphite carbon anode, and arrangement of the diaphragms and gaskets with respect to the two cathodic chambers.

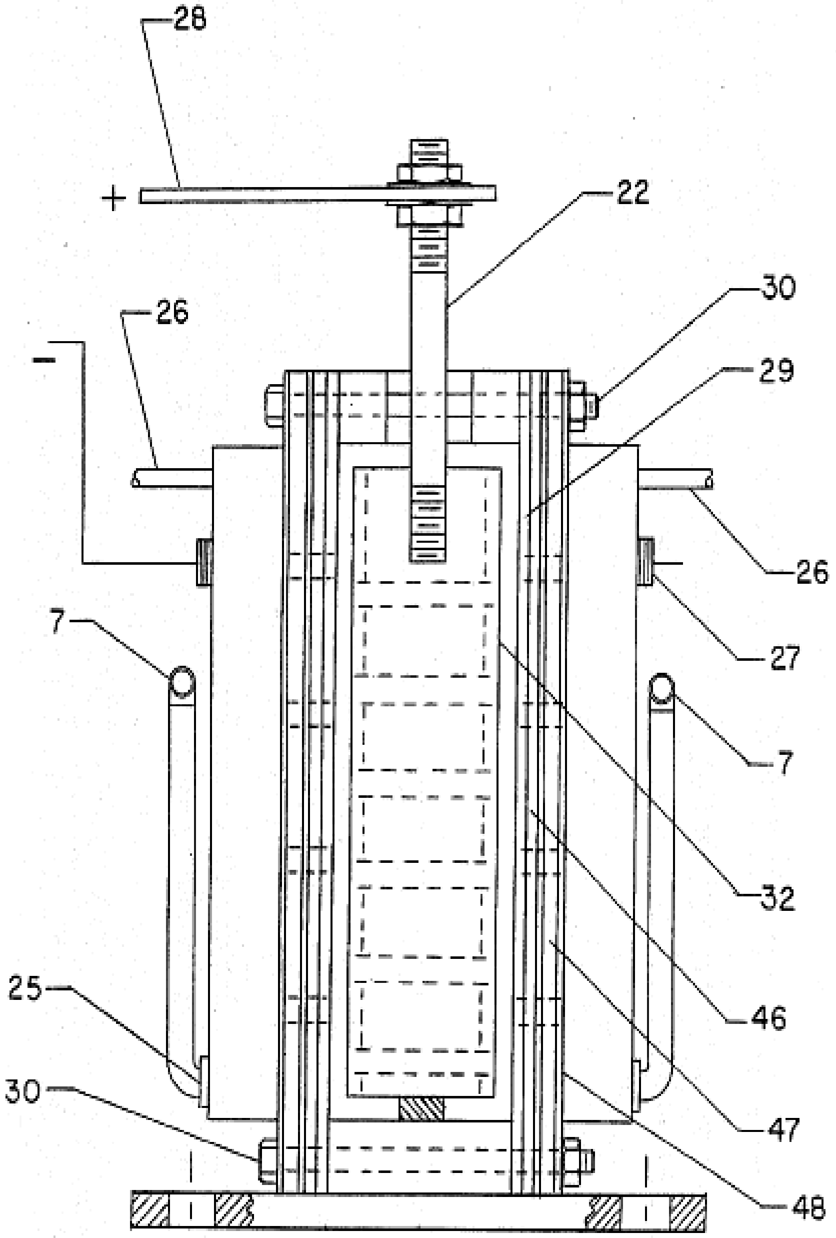

FIG. 3

FIG. 4 is a longitudinal section of the Electrolytic cell showing the respective positions of the copper rods connection the graphite carbon anode and the position of the constant level control device.

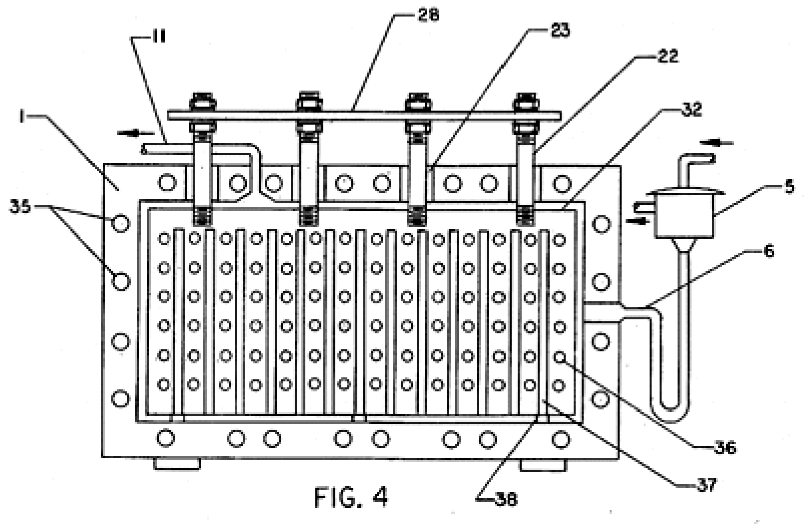

FIG. 4

FIG. 5 is a longitudinal section of the graphite carbon anode with perforations and grooves shown in detail.

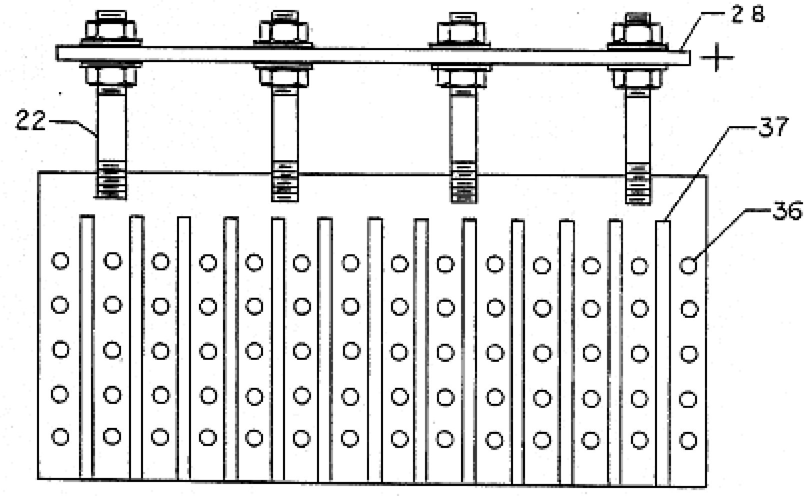

FIG. 5

FIG. 6 is a front view of the cathodic plate and chamber, with cut-away view showing the perforations of the inner plate.

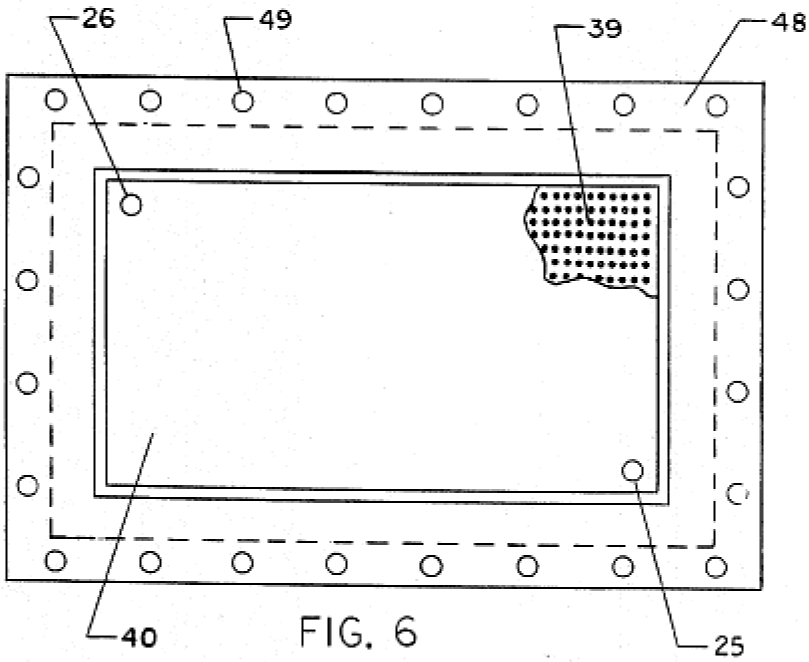

FIG. 6

FIG. 7 is a detailed cross-section of the graphite carbon anode.

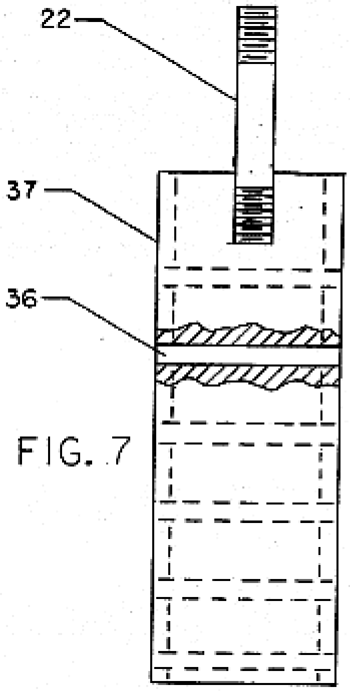

FIG. 7

FIG. 8 is a detailed cross-section of the cathodic chamber showing arrangement of the diaphragms, gaskets, and cathodic liquid discharge pipe.

FIG. 8

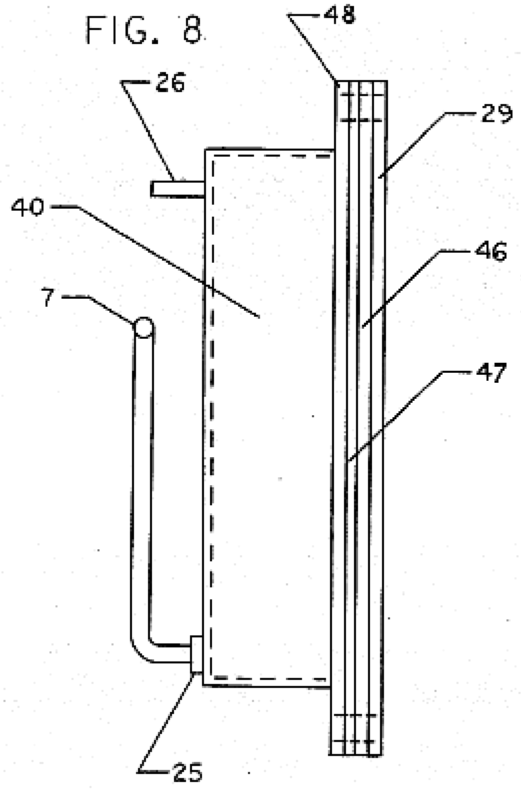

DETAILED DESCRIPTION OF THE PREFERRED EMBODIMENTS

Reference FIG. 2, (1) is the Electrolytic cell which generates hydrogen from water as water is fed continuously from a feed tank (2) maintained at constant head by a feed pump (3) while excess water flows back to the sump tank (4). Water is fed continuously to the Electrolytic cell (1) through a constant level flow control device (5) by way of the inlet hole (6). Excess water flows back to the sump tank (4) through discharge holes (5) of the cathodic liquid level control device (7). The Electrolytic cell is energized by a direct current (DC) generator (41) of 50-5,000 amperes DC current output, run by the automotive engine (20) by means of a rotational energy connecting element (42). The positive terminal of the DC generator (41) is connected to the bus bar (28) of the graphite carbon anode (32) while the negative terminal is connected to the negative (27) of the cathodic plate.

As current is supplied to the electrolytic cell (1), water inside the cell is immediately decomposed into hydrogen and oxygen, the hydrogen gas passing through the hydrogen outlet (26) while the separated oxygen from the anodic chamber is discharged through the oxygen exit tube (11). The hydrogen gas from the hydrogen outlet (26) flows continuously through conduit (8) leading to the flash back preventer (10) containing water (9) maintained at a predetermined level, then through check valves (12) and (12) and finally into the hydrogen gas collector tank (14). Pressure inside the anodic chamber of the electrolytic cell (1) and pressure at the hydrogen gas collector tank (14) are maintained at a certain point by means of the 6-12 volts DC electric pump (13). Hydrogen from the hydrogen gas collector tank (14) is introduced into the engine by means of the pump (15), the hydrogen gas passing through the two-way fuel selection valve (16) connected with Y-connecting element (17) and thence through the carburettor adapter (18) to the carburettor (19) and finally to the combustion chamber of the automotive engine (20) inlet (21) for gasoline fuel and inlet (43) for LPG gas fuel are provided in the fuel selection valve (16) to enable presenting to hydrogen gas simultaneously while maintaining the desired or requisite proportions; e.g., about 19% of the volume of gasoline feed with the remainder of fuel being hydrogen gas, the energy equivalent of LPG gas feed and the remainder hydrogen.

The anode (32), FIGS. 3 and 4, is made of graphite carbon, perforated (36) and grooved (37) to allow free circulation of activated water from the bottom to the top of the anodic chamber by natural convection currents resulting in a rapid dissipation of heat in the system. The location of the inlet feed (6) also facilitates the rise of heated water thereby providing a fresh supply of water in the system which is readily decomposed by the flow of the high density direct current through it.

The frame of the electrolytic cell (1), (FIG. 4), is provided with bolt holes (35) around the periphery of the frame to allow stud bolts at both sides of the frame, firmly anchoring the asbestos diaphragms (46), (FIG. 8). The graphite carbon anode (32), (FIG. 4) is supported by porcelain supports (38) to avoid grounding or short-circuiting of the cell and is connected to the outside positive terminal circuit of the DC generator (41) by means of copper rods (22) threaded at both ends, one end of which is screwed tightly to the graphite carbon anode (32) spaced at convenient intervals along the axis while the external ends of the copper rods (32) are attached to the copper bus bar (28) which is electrically connected to the DC generator (41) which is driven by the automotive engine (20) by means of the rotational energy connecting element (42).

The cathodic steel plate (40), (FIG. 6) is shown with perforations (39) in the cut-away view. A clamp (48) is fitted snugly around the rectangular body of the cathodic chamber, with bolt holes (49) for the bolts to pass and hold firmly the gaskets (29), asbestos diaphragms (46) and cathodic plates (47), (FIG. 8).

The negative terminal (27) of the cathode (FIG. 1) is connected electrically to the negative terminal of the DC generator (41). Means to adjust and regulate the power load to the electrolytic cell with a variable power supply control device (50). (FIG. 2) are connected between the electrolytic cell (1) and the DC generator (41) enabling the cell to operate at varying amperage loads adaptable to each particular engine model and horsepower rating in order to generate the requisite amount of hydrogen gas which is added to (as by mixing) with the gasoline, diesel fuel, or LPG gas required to operate such engine.
The oxygen gas coming from the exit tube (11) is pumped by means of a pump (51) provided with check valves (52) and (53) to maintain pressure inside anodic chamber which is presented to the carburettor (18) or simply vented into the atmosphere by means of the two-way valve (54).
Although the description above contains many specificities, these should not be construed as limiting the scope of the invention but as merely providing illustrations of some of the presently preferred embodiments of this invention. For example, the DC generator may vary over the range of 50-5,000 amperes. The anode could be fabricated from nickel or appropriate metallic element, and the diaphragms could be any other acid-alkali resistant filtering material. The hydrogen gas an be routed by an electric blower, and fuel injection nozzles could replace the carburettor. The cathodic steel plate could be fabricated from stainless steel or other appropriate metallic element.

EXAMPLE

A Wisconsin engine was started with gasoline fuel to drive a direct current generator feeding electrical power to electrolytic cells. While the engine was running on pure gasoline fuel, the hydrogen generated from the cells was vented to the atmosphere and the rate of gasoline consumption was determined. Then the hydrogen was introduced into the engine by way of a T-connection, and through a valve, and gradually closing the gasoline fuel petcock valve to a point where the engine could continue running with the gasoline and hydrogen fuel mixture. Attempts were made to completely close or shut off the gasoline fuel and run the engine with 100% hydrogen fuel, but the engine stopped. The engine was made to run with the minimal mixture of gasoline combined with the total volume of hydrogen generated from the electrolytic cells, and the engine was made to run with this combined gasoline and hydrogen fuel mixture for a period of 12 minutes. The rate of flow of gasoline fuel used to supplement the hydrogen fuel to keep the engine running normally was also measured.

In the hydrogen run, 81 volume percent less gasoline was used at steady state. The "gasoline only" test was run under a "no load" condition while the "gas/H2 mixture" test was run under a "load" condition. This was because the "load" was the actual charging of the electrolytic cells, and a "gasoline only" condition required no charging of electrolytic cells.

Analysis of the exhaust gases showed, in volume percent, with gasoline only 8.84% CO, 0.87% total hydrocarbons, and NOx of 44.1 ppmv. The hydrogen and gasoline rune showed 3.20% CO, 0.36% total hydrocarbons, and 283.0 ppmv NOx. The NOx can be greatly lowered in the present invention by recycling the generated oxygen to the engine.

The scope of this invention should be determined by the appended claims and their legal equivalents, rather than by the examples given.

II.) Teil Elektrizität und Energie

Patente und Verfahren zur Energiegewinnung mit und aus Elektrizität etc.

5.0.0.0. Ein Schlaglicht zur „beschleunigten“ Arbeit unserer Ministerialen

Wenn die Wirtschaft auch so arbeiten würde wie unsere Beamten, es wäre nicht auszudenken……….

Im Sommer 2001 erhielt Marco Bischof vom deutschen Bundesministerium für wirtschaftliche Zusammenarbeit und Entwicklung (BMZ) den Auftrag, eine Studie über unkonventionelle Ansätze zur Energiegewinnung zu erstellen; zusätzlich sollten auch einige Verfahren behandelt werden, in denen es nicht um Energiegewinnung, sondern um „Aktivierung biologischer Prozesse" zum Zwecke einer Behebung von Umweltproblemen, für Wasserreinigung und Bodenrehabilitierung ging. In einem Auswahlverfahren wurden schließlich sechs Verfahren für die Studie ausgewählt. Nach Ablieferung des Berichtes **ein Jahr später** wurde dieser zunächst einer Reihe von externen Instituten und Experten zur Begutachtung vorgelegt.

Einige der Stellungnahmen fielen so kritisch aus, daß das Ministerium beschloß, den Bericht vor einer eventuellen Veröffentlichung erst genauer auf seine technische und wissenschaftliche Korrektheit überprüfen zu lassen. Damit wurden Dipl.-Ing. Andreas Manthey und Dipl.-Phys. Thorsten Ludwig vom Berliner Institut für Innovative Energietechnologien beauftragt.

Mitte September 2005 wurde nun diese Überprüfung zur Zufriedenheit des Ministeriums abgeschlossen, **vier Jahre nach Beginn der Arbei**t, und vom Ministerium freigegeben.

5.0.0.1. Circuit for electrically operated vehicle; US Patent #: 3,809,978

Zubris; Joseph R. Last known address was Zubris Electrical Company, 1320 Dorchester Ave, Boston, MA, 02122.

Mr. Zubis developed in 1969 an electric car circuit design that he estimated cost him $100 a year to operate. Using an old ten horse electric truck motor, he worked out a unique system to get peak performance from his old 1961 Mercury engine that he ran from this power plant. The device actually cut energy drain on electric car starting by 75%, and by weakening excitation after getting started, produced a 100% mileage gain over conventional electric motors. The inventor was shocked to find the lack of reaction from larger business interests, and so in the early seventies began selling licenses to interested smaller concerns for $500.

A DC motor circuit powered by two banks of automobile storage batteries includes an armature, a pair of field windings which are essentially connected in parallel with each other and in series with the armature of the motor, an excitation circuit coupled to the pair of field windings for establishing a potential thereacross and having its own DC power source, a switch for operating the DC motor in either the forward or reverse direction and circuit means including a full wave rectifier bridge for recharging the two banks of batteries. The circuit may also include means for switching from a parallel connection of the banks of storage batteries wherein maximum current is available for starting and low speed operation, to a series connection for full voltage high speed operation. With the circuit of this invention greater efficiency of the motor is obtained primarily by means of the field excitation circuit, and where limited operating range is acceptable the circuitry enables a vehicle to be powered by readily available automotive batteries and still have exceptionally good performance.

BACKGROUND OF THE INVENTION

The present invention relates in general to a circuit for an electrically operated vehicle. More particularly, the present invention is concerned with an improved direct current motor circuit that has been designed to operate efficiently and with less power drain from the storage batteries than with existing circuits used for powering vehicles.

Power circuits for electrical vehicles generally require a relatively large electric motor for powering the vehicle, and this motor in turn requires an excessive number of storage batteries for properly powering the motor over a reasonable period of operation. These known circuits generally do not provide for efficiently operating the motor with the least amount of drainage from the storage batteries. In particular, known circuits require excess surge currents during starting and low speed operations. In addition, these electrical vehicles have either been overly complex and too costly to be manufactured for general public usage, or alternatively, are too small and limited in the period of use obtained between battery charging. Accordingly, it is an object of the present invention to provide an improved electrically-operated vehicle circuit that is efficient in operation and can be operated over longer periods than known circuits having the same storage battery capacity. Another object of the present invention is to provide a battery operated vehicle circuit that does not require an excessive number of storage batteries for its operation. ther object of the present invention is to provide an electrically-operated vehicle circuit that has improved starting efficiency and operating efficiency by minimizing surge currents thereby enabling the vehicle to operate over longer periods than known circuits having the same storage battery capacity. Another object of the present invention is to provide a battery-operated vehicle characterized by enhanced torque thereby allowing the use of a generally smaller motor to provide improved vehicle performance at lower battery drain. further object of the present invention is to provide a battery-powered vehicle circuit comprising a motor, including an armature and field windings and an excitation circuit for enabling more efficient operation of the motor and further enabling the use of a smaller horsepower motor than has been possible with existing systems operating on a like storage battery capacity.

Still a further object of the present invention is to provide an electrically operated vehicle that can be manufactured relatively inexpensively, whose circuitry is not excessively complex, which is able to operate over a relatively long time period without requiring re-charging of the batteries, and which can operate at a reasonably high top speed. nother object of the present invention is to provide a battery operated circuit that is relatively easily adaptable to existing vehicles such as gasoline driven vehicles.

SUMMARY OF THE INVENTION

To accomplish the foregoing and other objects of the present invention, the circuit of the present invention generally comprises a direct current motor including an armature and a pair of field windings which are coupled in parallel with each other and in series with the armature. This circuit also includes preferably two banks of storage batteries for powering the motor, means for selectively connecting the storage batteries to the motor when the vehicle is to be operated, means for permitting either forward or reverse operation of the motor and the vehicle, means for recharging the storage batteries when the vehicle is not in use, and an excitation circuit coupled to the pair of field windings for establishing a magnetic field therein. This excitation circuit includes its own storage battery which is primarily responsible for establishing this magnetic field in the field windings. By establishing this field the initial surge currents to the armature are reduced and the armature is allowed to develop a full torque at a lower current input which in turn requires less of a drain on the batteries per mile of operation.

In accordance with another aspect of the present invention, there is provided a three-position switch which can be set to either the high speed, normal speed or automatic mode of operation. In the normal mode of operation, the two battery banks are connected in parallel whereas in the high speed mode of operation the two banks of batteries are switched to a series connection. The high and normal modes of operation are selected manually. In the automatic mode, the batteries are connected in parallel until a predetermined armature voltage is developed across the armature at which time the batteries automatically switch to a series connection thereby providing additional voltage to the motor circuit for higher speed operation.

In the present invention the use of a field excitation circuit is of particular importance, as the use of this circuit primarily enables one to operate at lower surge currents. In one embodiment the starting and acceleration power drain were reduced by approximately 50 percent. The normal running power drain is also reduced by the use of the excitation circuit. However, it is noted that even if the excitation circuit should malfunction vehicle operation does continue, at a degraded efficiency.

BRIEF DESCRIPTION OF THE DRAWING

Numerous other objects features and advantages of the invention will now become apparent upon a reading of the following detailed description taken in conjunction with the accompanying drawing of a circuit schematic diagram of a preferred embodiment of a circuit for use in an electrically-operated vehicle and constructed in accordance with the principles of the present invention.

DETAILED DESCRIPTION

Referring now to the sole drawing in the application, there is shown a circuit schematic diagram of a preferred embodiment of a motor drive circuit for driving a vehicle. The circuit generally comprises a motor 10, battery banks 12 and 14, reversing switch 16, excitation circuit 18 and charging circuit 20.

When it is desired to recharge all of the storage batteries included in the circuit the plug 22 is coupled to a conventional 110 VAC line. The plug 22 connects by way of fuse 24 to autotransformer 26 of the charging circuit 20. The autotransformer is of conventional design and includes a plurality of different taps. By adjusting the setting of these taps different voltages can be coupled to the full wave bridge 30 which is also of conventional design and includes a plurality of diodes 28.

It is advantageous to use an auto-transformer 26 in the circuit of this invention in order to provide for different degrees of charging. By feeding a relatively low voltage to the bridge circuit 30 an equalizing charge may be provided to the batteries of the circuit for stabilizing the charge on the batteries preferably over a relatively long time period. Alternatively, if it is desired to charge the batteries relatively quickly then the setting on the auto-transformer 26 is changed so that a higher AC voltage is coupled to bridge circuit 30. The relay K1 may be referred to as an interlock relay and is used to prevent and starting of the vehicle motor while the plug 22 is inserted and the batteries are being charged. Relay K1 is shown in the sole drawing in its de-energized position wherein vehicle starting is permitted. Relay K1 includes relay coil C1 and a plurality of contacts a-1. Contacts c, f, h and j are movable contacts, the remaining contacts being fixed. When the plug 22 is inserted in a conventional AC receptacle, the full-wave rectified voltage from bridge 30 is coupled to coil C1 by way of terminals a and 1 of relay K1. Coil C1 is thus energized and the contacts of the relay move to the opposite position to that shown in the drawing. The battery charging path thus commences at terminal K1a, couples by way of line 31 to contact K1d and from there by way of contact K1c to the negative side of battery 32 which is typically a 12-volt battery used in an automobile for powering the accessories such as the headlights. The charging path continues through battery 32 by way of contacts K1j and K1i to battery 34 of excitation circuit 18 and from thence through contacts K1e and K1f diode D2 and line 35 to the negative side of battery bank 14. The positive side of bank 12 couples by way of line 33 and switch S4 to contacts K1g and K1h and from thence to one side of coil C1 which connects to the positive output of bridge circuit 30. Relay K5 is closed during charging by keeping switch S3 in its high speed state (C5 energized).

It is noted that when relay K1 is in its energized position due to the charging voltage being applied from bridge circuit 30 that the contacts K1j and K1k are open, and thus any voltage that may be available at contact K1j is not coupled by way of line 45 to the ignition switch 36 which may be a simple on-off two-position switch, as shown.

The battery banks 12 and 14 each include, respectively, a pair of battery arrays 12a, 12b; and 14a, 14b. Each of these arrays in the disclosed embodiment includes four conventional 12 volt storage batteries and thus the voltage developed across a single array is 48 volts. Twice the current is available by connecting each of the arrays of each bank in parallel, by operation of relay K5. When the relay K5, which is discussed in more detail hereinafter, is in its open position, as shown, the banks 12 and 14 are connected in parallel. When the relay K5 is changed to its closed position, the banks 12 and 14 are then connected in series. The path of this series connection may be considered as commencing at line 35 coupling by way of lines 37 to battery bank 14, by way of fuses 38, fuses 39, and the closed contacts of relay K5 to battery bank 12. A voltmeter 21 may be coupled across the battery banks for registering the charge of the batteries and when it is low.

The diode pairs D1, D3 and D4 are used for blocking the currents between the battery banks 12 and 14 when the battery banks 12 and 14 are connected in parallel. Diode pairs D1 and D3 are effectively by-passed when relay K5 closes.

The switch S4, as shown in the drawing, is a simple double pole switch that is manually closed to connect line 33 to one side of battery bank 12 by-passing diode pair D4. This switch is moved to its closed position after the plug 22 has been inserted in order to commence the charging of the batteries. After the battery banks 12 and 14 and the batteries 32 and 34 have been properly charged, the vehicle is then ready for use. When the ignition switch 36 is closed and the plug 22 is not inserted in the AC outlet, the relay K1 is in the position shown in the drawing and energy is coupled from the battery 32, whose negative terminal is now grounded, via ignition switch 36 to switch S1 which is a single pole/single throw switch. Switch S1 is preferably linked for operation to the accelerator pedal of the vehicle and is closed upon a slight deflection of the pedal to thereby couple energy by way of line 40 to relay coil C2 of relay K2, thereby causing its associated contact K2a to close coupling the power from battery banks 12 and 14 to the motor circuit 10. Concurrently with the energization of coil C2, coil C3 is also energized by way of line 41 thereby latching relay K3 and closing its associated contact K3a thereby coupling the excitation circuit 18 to the field windings F1 and F2 of motor 10.

The motor 10 generally comprises field windings F1 and F2 which are essentially connected in parallel and armature 50 which is essentially connected in series with windings F1 and F2 by way of reversing switch S2. Of course, the motor also has an output shaft which is suitably coupled to the drive train of the vehicle. The armature circuit of the motor also includes a carbon pile 52 which is connected in series with armature 50 for controlling the current therethrough. The carbon pile 52 is preferably attached to the same accelerator pedal that microswitch S1 is attached to and is for controlling the speed of the vehicle. The carbon pile provides smooth control upon starting and during acceleration and is designed to minimize power losses. The microswitch S1 which is open when the pedal is released, prevents waste of energy when power isn't needed, such as going down a hill or idling in traffic.

In the sole FIGURE the reversing switch 16 is shown in its forward position wherein the contacts b and c are connected together as are the contacts e and f. Contacts a and d are alternantly connected. When this manually operated switch is changed to the reverse position the contacts c and f are interconnected as are the contacts b and e thereby reversing the polarity of the voltage applied to armature 50. Meter 54 registers the current flowing in the armature circuit. The switch also has an emergency off position wherein all contacts open including, of course, a and d.

The excitation circuit 18 comprises a relay K4 with its associated coil C4 and normally closed contact K4a. Circuit 18 also includes a resistor R2, battery 34 which is preferably a 6-volt or 4-volt battery, resistor R3 and a second ammeter 56 for registering the current flowing in the excitation circuit. When the relay K4 is de-energized a circuit path is provided by way of the closed contact of relay K3, the closed contact of relay K4, battery 34, resistor R3, and ammeter 56 to reversing switch 16, and from thence to the field windings of the motor.

As previously indicated, when the accelerator pedal is first depressed and switch S1 is closed, relays K2 and K3 are energized and the battery voltage which can be assumed to be 48 volts when banks 12 and 14 are in parallel, is coupled to field windings F1 and F2. The theory in accordance with the present invention is that less power is expended if a field can be established across the field windings and across winding F2 in particular. In this way the initial surge current to the armature 50 will be reduced thereby allowing the armature to develop its full torque at a lower power input. Thus, with relay K3 energized a field is established by means of battery 34 and an energizing current flows in winding F2 prior to any appreciable current flowing in winding F1 from the battery banks 12 and 14. Winding F1 does receive some current from the excitation circuit 18 by way of resistor R1. It is preferred that resistor R1 be selected so that approximately one-half the current which is fed to winding F2 from battery 34 couples to winding F1 to establish a field thereacross. For example, if field F2 has 50 amps flowing therein, field F1 will have 25 amps flowing therein.

Assuming that the batteries are still connected in parallel after a predetermined time period, the armature voltage V.sub.o increases to some predetermined value of approximately 50 to 60 volts. At that time relay coil C4 of relay K4 energizes and its associated contact K4a opens thereby introducing resistor R2, which was previously shorted out, into the excitation circuit. This decreases the current in the field winding F2 to say 30 amps thereby decreasing the armature e. m. f. The motor therefore speeds up to compensate for the decrease in e. m. f. therefore providing a higher speed of operation of the vehicle. This excitation circuit is believed to create the equivalent of a shunt field characteristic at various operating speeds.

In addition to the energization of relay K4, the armature voltage V.sub.o can also be monitored to cause the battery banks 12 and 14 to change from a parallel connection to a series connection thereby feeding a higher voltage to the motor and enabling the motor to operate at a higher speed as controlled by carbon pile 52. Switch S3 can be moved to one of three positions and when it is in the automatic position (movable contacts a and b coupled to fixed contacts e and f) the voltage V.sub.o across the armature 50 is coupled to coil C5 of relay K5. When this voltage increases to a sufficient value which preferably is about 10 volts lower than the value necessary to excite coil C4, coil C5 is excited and its associated contacts K5a and K5b close thereby connecting banks 12 and 14 in series rather than in parallel. When S3 is in its normal position, the movable contacts S3a and S3b are opened and are not contacting either contacts S3c, S3d, S3e or S3f. When the switch S3 is changed to its high speed position, the relay coil C5 is immediately energized from battery bank 14 and the batteries are changed to a series connection independent of the armature voltage V.sub.o.

In accordance with another aspect of the present invention there may be provided an additional foot pedal switch 60 which may be arranged coupled to the brakes of an ordinary gasoline vehicle. This switch is coupled to a relay K6 having a coil C6 and associated contact K6a. When the foot pedal switch is depressed the contact K6a closes, thereby placing a resistor R4 across the armature 50 and field windings thereby dissipating generated power through resistor R4 creating dynamic braking and decreasing the speed of the vehicle.

In accordance with another aspect of this invention the excitation circuit can be modified for regenerative operation especially useful in hilly terrain. For this type of operation resistor R3 is preferably decreased to thereby increase current in winding F2. Diodes D4 are also removed, and relay K4 is preferably kept de-energized. Battery 34 may be a 12-volt battery also to provide more excitation current. When going down hill, a recharging (regeneration) occurs when the motor overspeeds by 10 to 15 percent. With the present invention a conventional series motor can be used and with the addition of an excitation circuit a shunt field effect can also be obtained. Also, the concepts herein disclosed are also applicable to other types of DC motors.

Having described one embodiment of the present invention it should become obvious that numerous other modifications can be made of the disclosed embodiment without departing from the scope of this invention. For example, different numbers of batteries can be used depending for one thing upon the weight of the vehicle. Also, the relays shown can be replaced by semiconductor devices such as silicon controlled rectifiers. In addition, at least part of relay K1 can be replaced by a solid-state logic circuit. Moreover, the carbon pile can be replaced by a solid state control circuit.

United States Patent [19]

Zubris

BEST AVAILABLE COPY

[11] **3,809,978**

[45] **May 7, 1974**

[54] **CIRCUIT FOR ELECTRICALLY-OPERATED VEHICLE**

[76] Inventor: **Joseph R. Zubris,** 5 Glover Pl., Dorchester, Mass.

[22] Filed: **Sept. 8, 1972**

[21] Appl. No.: **287,563**

[52] **U.S. Cl.** **318/139**
[51] **Int. Cl.** **H02p 7/06**
[58] **Field of Search** 318/139, 247, 248, 252; 320/7

[56] **References Cited**

UNITED STATES PATENTS

3,264,540	8/1966	Dannettell	318/139
1,291,233	1/1919	Storer	318/248 X
3,718,848	2/1973	Hines	318/139 X
3,207,966	9/1965	Parkinson	318/139
3,702,959	11/1972	Le Gloan	318/139

Primary Examiner—Bernard A. Gilheany
Assistant Examiner—W. E. Duncanson, Jr.

[57] **ABSTRACT**

A DC motor circuit powered by two banks of automobile storage batteries includes an armature, a pair of field windings which are essentially connected in parallel with each other and in series with the armature of the motor, an excitation circuit coupled to the pair of field windings for establishing a potential thereacross and having its own DC power source, a switch for operating the DC motor in either the forward or reverse direction and circuit means including a full wave rectifier bridge for recharging the two banks of batteries. The circuit may also include means for switching from a parallel connection of the banks of storage batteries wherein maximum current is available for starting and low speed operation, to a series connection for full voltage high speed operation. With the circuit of this invention greater efficiency of the motor is obtained primarily by means of the field excitation circuit, and where limited operating range is acceptable the circuitry enables a vehicle to be powered by readily available automotive batteries and still have exceptionally good performance.

16 Claims, 1 Drawing Figure

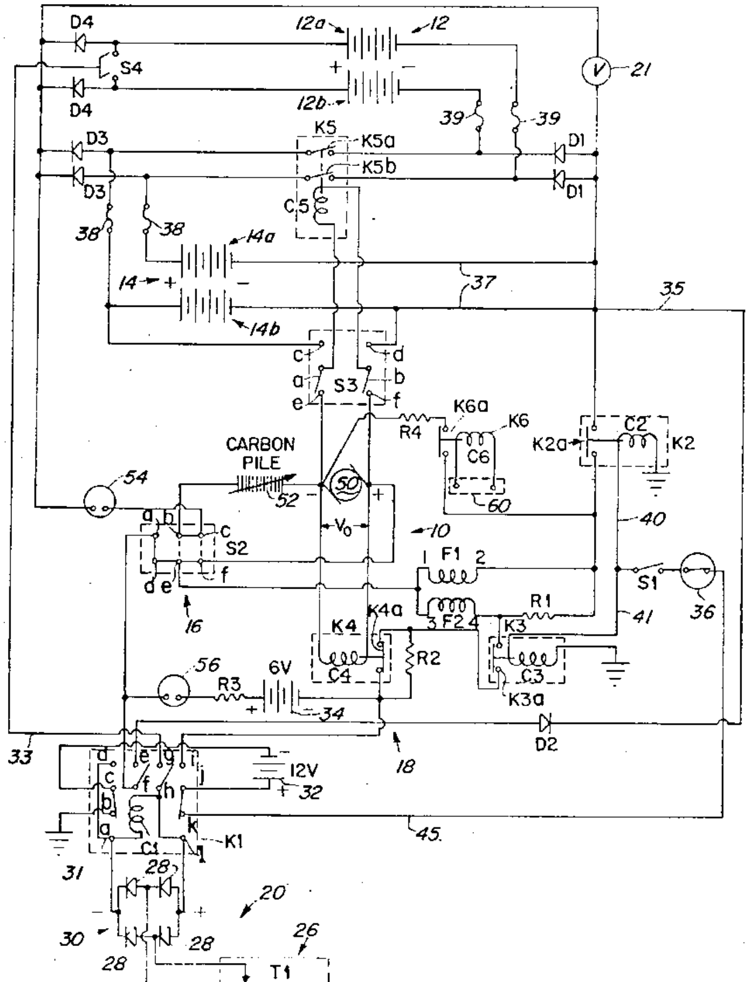

5.0.1.1. Bedini John C.; All this patents are granted to Mr. Bedini:

John Bedini c/o Bedini Technologies Inc.; 6200 E. Commerce Loop, Post Falls, Idaho, 83854, U.S.A

5.0.1.2. US #: 6,392,370; May 21, 2002; US Cl. 318/140

Motor / Generator Device and Method of a Back EMF Permanent Electromagnetic Motor Generator
This invention is a back EMF permanent electromagnetic motor generator and method using a regauging process for capturing available electromagnetic energy in the system. The device is comprised of a rotor with magnets of the same polarity; a timing wheel in apposition to a magnetic Hall Effect pickup switch semiconductor; and a stator comprised of two bars connected by a permanent magnet with magnetized pole pieces at one end of each bar. There are input and output coils created by wrapping each bar with a conducting material such as copper wire. Energy from the output coils is transferred to a recovery rectifier or diode. The magnets of the rotor, which is located on a shaft along with the timing wheel, are in apposition to the magnetized pole pieces of the two bars. The invention works through a process of regauging, that is, the flux fields created by the coils is collapsed because of a reversal of the magnetic field in the magnetized pole pieces thus allowing the capture of available back EMP energy. Additional available energy may be captured and used to re-energize the battery, and/or sent in another direction to be used as work. As an alternative, the available back EMF energy may be dissipated into the system.

BACKGROUND OF THE INVENTION
1. Field of the Invention
The invention relates generally to the capturing of electromagnetic energy using a method and device to create back EMF (electromagnetic force) and re-phasing of the back EMF to recycle and capture the available back EMF energy. Back EMF is also referred to as regauging and may be defined as energy created by the magnetic field from coils, and only by coils, and not by magnets.
2. Background Information and Related Art
Operation of a normal magnetic motor has the rotor pole attracting the stator pole, resulting in the generation of power from the magnets to the rotor and flywheel. During this phase, energy flows from the magnetic to the rotor/flywheel and is stored in the increased rotation. A rotor pole

leaving a stator pole and creating a condition of drag-back results in power having to be put back into the magnetic section by the rotor and flywheel to forcibly overcome the drag-back. In a perfect, friction-free motor, the net force field is therefore referred to as most conservative. In other words, a most conservative EMF motor has maximum efficiency. Without extra energy continually fed to the motor, no net work can be done by the magnetic field, since half the time the magnetic field adds energy to the load (the rotor and flywheel) and the other half of the time it subtracts energy back from the load (the rotor and flywheel). Therefore the total net energy output is zero in any such rotary process without additional energy input. To use a present day magnetic motor, continuous energy must be input into the motor to overcome drag-back and to power the motor and its load.

Present EMF motors and generators all use such conservative fields and therefore, have internal losses. Hence, it is necessary to continually input all of the energy that the motor outputs to the load, plus more energy to cover losses inside the motor itself. EMF motors are rated for efficiency and performance by how much energy input into the motor actually results in output energy to the load. Normally, the Coefficient of Performance (COP) rating is used as a measure of efficiency. The COP is the actual output energy going into the load and powering it, divided by the energy that must be input into the device with its load. COP is the power out into the load, divided by the power input into the motor/load combination. If there were zero internal losses in a motor, that "perfect" motor would have a coefficient of performance (COP) equal to 1.0. That is, all energy input into the motor would be output by the motor directly into the load, and none of the input energy would be lost or dissipated in the motor itself.
In magnetic motor generators presently in use, however, due to friction and design flaws, there are always internal losses and inefficiencies. Some of the energy input into the motor is dissipated in these internal losses. As a consequence, the energy that gets to the load is always less than the input energy. So a standard motor operates with a COP of less than 1.0 which is expressed as COP<1.0. An inefficient motor may have a COP=0.4 or 0.45, while a specially designed, highly efficient motor may have a COP=0.85.

The conservative field inside of a motor itself can be divided into two phases. Producing a conservative field involves net symmetry between the "power out" phase from the magnetic to the rotor/flywheel and the "power back in" phase from the rotor/flywheel back to the magnetic. That is, the two flows of energy (one from the magnetic into the rotor and flywheel, and one from the rotor and flywheel back to the magnetic) are identical in magnitude but opposite in direction. Each phase alone is said to be "asymmetrical"; that is, it either has: 1) a net energy flow out to the rotor/flywheel; or 2) a net energy flow back into the magnetic from the rotor/flywheel. In simplified terms, it is referred to as "power out" and "power back in" phases with respect to the motor magnetic. Hence, the two asymmetrical phases are: 1) the power-out phase; and 2) the "power back in" phase, with reference to the magnetic.

For the power-out phase, energy is derived from the EMF existing between the stator pole and incoming rotor pole in an attraction mode. In this phase, the rotary motion (angular momentum and kinetic energy) of the rotor and flywheel is increased. In short, power is added to the rotor/flywheel (and thus to the load) from the fields between stator pole and rotor pole (the electromagnetic aspects of the system).

For the "power back in" phase, energy must be fed back into the magnetic from the rotor and flywheel (and the load) to overcome the drag-back forces existing between stator pole and outgoing rotor pole. In this phase, energy is returned back to the internal magnetic system from the rotary motion of the rotor and flywheel (the angular momentum, which is the rotational energy times). As is well known in physics, a rotor/flywheel's angular momentum provides a convenient way to store energy with the spinning rotor/flywheel mass acting as an energy reservoir.

All present day conventional magnetic motors use various methods for overcoming and partially reversing back EMF. Back EMF is the return pulse from the coil out of phase and is also referred to as regauging. The back EMF is shorted out and the rotor is attracted back in, therefore eliminating back drag. This can be accomplished by pouring in more energy, which overpowers the back EMF, thereby producing a forward EMP in that region. The energy required for this method must be furnished by the operator.

The motor of the present invention uses only a small amount of energy to "trigger" a much larger input of available energy by supplying back EMF, thus increasing the potential energy of the system. It then utilizes this excess potential energy to reduce or reverse back EMF, thereby increasing the efficiency of the motor and, therefore, the COP.

If the energy in phase 1 (the power-out phase) is increased by additional available energy in the electromagnetic themselves, then the energy in phase 1 can be made greater than the energy in phase 2 (the power-back-in phase) without the operator furnishing the energy utilized. This produces a non-conservative net field. Net power can then be taken from the rotating stator and flywheel, because the available energy added into the stator and flywheel by the additional effects, is transformed by the rotor/flywheel into excess angular momentum and stored as such. Angular momentum is conserved at all times; but now some of the angular momentum added to the flywheel is evoked by additional effects in the electromagnetic rather than being furnished by the operator.

Electrodynamics assume that the potential available energy of any system can be changed at will and without cost. This is back EMF and is well-known in physics. It is also routinely employed by electrodynamics in the theoretical aspects. But to simplify the mathematics, electrodynamics will create a back EMF twice simultaneously, each back EMF carefully selected just so that the two available forces that are produced are equal and opposite and cancel each other "symmetrically". This is referred to as "symmetrical back EMF". A symmetrical back EMF system cannot produce a COP>1.0.

On the other hand, the motor of the present invention deliberately creates a back EMF itself and its potential energy only once at a time, thereby retaining each extra force for a period of time and applying it to increase the angular momentum and kinetic energy of the rotor and flywheel. Specifically, this back EMF energy with its net force is deliberately applied in the motor of the present invention to overcome and even reverse the conventional drag-back (the back EMF). Hence less energy must be taken from the rotor and flywheel to overcome the reduced back EMF, and in the ideal case none is required since the back EMF has been overpowered and converted to forward EMF by the back EMF energy and force. In the motor of the present invention, the conventional back-drag section of the magnetic becomes a forward-EMF section and now adds energy to the rotor/flywheel instead of subtracting it. The important feature is that the operator only pays for the small amount of energy necessary to trigger the back EMF, and does not have to furnish the much larger back EMF energy itself.

When the desired energy in phase 1 (the power out phase) is thus made greater than the undesired "drag-back" energy in phase 2, then part of the output power normally dragged back from the rotor and flywheel by the fields in phase 2 is not required. Hence, additional power compared to the system (without the special back EMF mechanisms) is available from the rotor/flywheel. The rotor maintains additional angular momentum and kinetic energy, compared to a system which does not produce back EMF itself. Consequently, the excess angular momentum retained by the rotor and flywheel can be utilized as additional shaft power to power an external load connected to the shaft.

A standard magnetic motor operates as the result of the motor being furnished with external energy input into the system by the operator to reduce phase 2 (power back into the magnetic from the rotor/flywheel) by any of several methods and mechanisms. The primary purpose of this external energy input into the system is to overcome the back EMF and also provide for the inevitable energy losses in the system. There is no input of energy separate from the operator input. Therefore, the COP of any standard magnetic motor is COP less than 1.0. The efficiency of a standard magnetic motor varies from less than 50% to a maximum of about 85%, and so has a COP<1.0. When nothing is done in the motor that will produce a reduction of the back EMF without the operator inputting all the energy for it, then for even a frictionless, ideal permanent magnet motor, the COP can never exceed 1.0.

Until the introduction of the motor of the present invention, it has been standard universal practice that the operator must furnish all energy used to reduce the back EMF, provide for the internal losses, and power the load. It is therefore a common belief by the scientific community that an ideal (loss-less) permanent magnet motor cannot exceed COP=1.0. And that is true, so long as the operator himself must furnish all the energy. Further, since real permanent magnetic motors have real internal losses, some of the input energy is always lost in the motor itself, and that lost energy is not available for powering the rotor/flywheel and load. Hence a real permanent magnetic motor of the conventional kind will always have a COP<1.0.

The common assumption that the COP of a motor is limited to less than 1.0 is not necessarily true, and that COP>1.0 is permitted without violating the laws of nature, laws of physics, or laws of thermodynamics. However, it can immediately be seen that any permanent magnet motor exhibiting a COP>1.0 must have some available energy input returning in the form of back EMF.

A problem relates to how back EMF energy can be obtained from a circuit's external environment for the specific task of reducing the back-drag EMF without the operator having to supply any input of that excess energy. In short, the ultimate challenge is to find a way to cause the system to: 1) become an open dissipative system, that is, a system receiving available excess energy from its environment, in other words, from an external source; and 2) use that available excess energy to reduce the drag-back EMF between stator and rotor poles as the rotor pole is leaving the stator pole. If this objective can be accomplished, the system will be removed from thermodynamic equilibrium. Instead, it will be converted to a system out-of-thermodynamic equilibrium. Such a system is not required to obey classical equilibrium thermodynamics.

Instead, an out-of-equilibrium thermodynamic system must obey the thermodynamics of open systems far from the established and well-known parameters of thermodynamic equilibrium. As is well known in the physics of thermodynamics, such open systems can permissibly: 1) self-order; 2) self-oscillate; 3) output more back EMF energy than energy input by the operator (the available excess back EMF energy is received from an external source and some energy is input by the operator as well); 4) power itself as well as its loads and losses simultaneously (in that case, all the energy is received from the available external source and there is no input energy from the operator); and 5) exhibit negentropy, that is, produce an increase of energy that is available in the system, and that is independent of the energy put into the system by the operator. As a definition, entropy roughly corresponds to the energy of a system that has become unavailable for use. Negentropy corresponds to additional energy of a system that has become available for use.

In the back EMF permanent magnet electromagnetic motor generator of the present invention, several known processes and methods are utilized which allow the invention to operate periodically as an open dissipative system (receiving available excess energy from back EMF) far from thermodynamic equilibrium, whereby it produces and receives its excess energy from a known external source.

A method is utilized to temporarily produce a much larger source of available external energy around an energized coil. Then the unique design features of this new motor provides a method and mechanism that can immediately produce a second increase in that energy, concurrently as the energy flow is reversed. Therefore, the motor is capable of producing two asymmetrical back EMFs, one after the other, of the energy within a single coil, which dramatically increases the energy available and causes that available excess energy to then enter the circuit impulsively, being collected and utilized.
The present motor utilizes this available excess back EMF energy to overcome and even reverse the back-drag EMF between stator pole and rotor pole, while furnishing only a small trigger pulse of energy necessary to control and activate the direction of the back EMF energy flow.
By using a number of such dual asymmetrical self back EMFs for every revolution of the rotor, the rotor and flywheel collectively focus all the excess impulsive inputs into increased angular momentum (expressed as energy.times.time), shaft torque, and shaft power.

Further, some of the excess energy deliberately generated in the coil by the utilization of the dual process manifests in the form of excess electrical energy in the circuit and is utilized to power electrical loads, e.g., a lamp, fan, motor, or other electrical devices. The remainder of the excess energy generated in the coil can be used to power the rotor and flywheel, with the rotor/flywheel also furnishing shaft horsepower for powering mechanical loads.

This new and unique motor utilizes a means to furnish the relatively small amount of energy to initiate the impulsive asymmetrical self back EMF actions. Then part of the available excess electrical power drawn off from the back EMFs is utilized to recharge the battery with dramatically increased over voltage pulses.
The unique design features of this motor utilize both north and south magnetic poles of each rotor and stator magnet. Therefore, the number of impulsive self back EMFs in a single rotation of the rotor is doubled. Advanced designs increase the number of self back EMFs in a single

rotor rotation with the result that there is an increase in the number of impulses per rotation which increase the power output of this new motor.

The sharp voltage pulse produced in the coil of this new motor by the rapidly collapsing field in the back EMF coil is connected to a battery in charge mode and to an external electrical load. The net result is that the coil asymmetrically creates back EMF itself in a manner adding available energy and impulse to the circuit. The excess available energy collected in the coil is used to reverse the back-EMF phase of the stator-rotor fields to a forward EMF condition, impulsively adding acceleration and angular momentum to the rotor and flywheel. At the same time, a part of the excess energy collected in the coil is used to power electrical loads such as charging a battery and operating a lamp or such other device.

It is well known in the art that changing the voltage alone creates a back EMF and requires no work. This is because to change the potential energy does not require changing the form of that potential energy, but only its magnitude. Work is rigorously the changing of the form of energy. Therefore, as long as the form of the potential energy is not changed, the magnitude can be changed without having to perform work in the process. The motor of the present invention takes advantage of this permissible operation to create back EMF asymmetrically, and thereby change its own usable available potential energy.

In an electric power system, the potential (voltage) is changed by inputting energy to do work on the internal charges of the generator or battery. This potential energy is expended within the generator (or battery) to force the internal charges apart, forming a source dipole. Then the external closed circuit system connected to that source dipole ineptly pumps the spent electrons in the ground line back through the back EMP of the source dipole, thereby scattering the charges and killing the dipole. This shuts off the energy flow from the source dipole to the external circuit. As a consequence of that conventional method, it is a requirement to input and replace additional energy to again restore the dipole. The circuits currently utilized in most electrical generators have been designed to keep on destroying the energy flow by continually scattering all of the dipole charges and terminating the dipole. Therefore, it is necessary to keep on inputting energy to the generator to keep restoring its source dipole.

An investigation of particle physics is required to see what furnishes the energy to the external circuit. Since neither a battery nor a generator furnishes energy to the external circuit, but only furnishes energy to form the source dipole, a better understanding of the electric power principle is required to fully understand how this new motor functions. A typical battery uses its stored chemical energy to form the source dipole. A generator utilizes its input shaft energy to rotate, forming an internal magnetic field in which the positive charges are forced to move in one direction and the negative charges in the reverse direction, thereby forming the source dipole. In other words, the energy input into the generator does nothing except form the source dipole. None of the input energy goes to the external circuit. If increased current is drawn into the external load, there also is increased spent electron flow being rammed back through the source dipole, destroying it faster. Therefore, dipole-restoring-energy has to be inputted faster. The chemical energy of the battery also is expended only to separate its internal charges and form its source dipole. Again, if increased current and power is drawn into the external load, there is increased spent electron flow being rammed back through the source dipole, destroying it faster. This results in a depletion of the battery's stored energy faster, by forcing it to have to keep restoring the dipole faster.

Once the generator or battery source dipole is formed (the dipole is attached also to the external circuit), it is well known in particle physics that the dipole (as is any charge) is a broken symmetry in the vacuum energy flux. By definition, this means that the source dipole extracts and orders part of that energy received from its vacuum interaction, and pours that energy out as the energy flowing through all space surrounding the external conductors in the attached circuit. Most of this enormous energy flow surging through space surrounding the external circuit does not strike the circuit at all, and does not get intercepted or utilized. Neither is it diverged into the circuit to power the electrons, but passes on out into space and is just "wasted". Only a small "sheath" of the energy flow along the surface of the conductors strikes the surface charges in those conductors and is thereby diverged into the circuit to power the electrons. Standard texts show the huge available but wasted energy flow component, but only calculate the small portion of the energy flow that strikes the circuit, is caught by it, and is utilized to power it.
In a typical circuit, the huge available but "wasted" component of the energy flow is about 10.sup.13 times as large as is the small component intercepted by the surface charges and diverged into the circuit to power it. Hence, around every circuit and circuit element such as a coil, there exists a huge non-intercepted, non-diverged energy flow that is far greater than the small energy flow being diverted and used by the circuit or element.

Thus there exists an enormous untapped energy flow immediately surrounding every EMF power circuit, from which available excess energy can be intercepted and collected by the circuit, if respective non-linear actions are initiated that sharply affect and increase the reaction cross section of the circuit (i.e., its ability to intercept this available but usually wasted energy flow).
The method in which the motor of the present invention alters the reaction cross section of the coils in the circuit, is by a novel use, which momentarily changes the reaction cross section of the coil in which it is invoked. Thus, by this new motor using only a small amount of current in the form of a triggering pulse, it is able to evoke and control the immediate change of the coil's reaction cross section to this normally wasted energy flow component. As a result, the motor captures and directs some of this usually wasted environmental energy, collecting the available excess energy in the coil and then releasing it for use in the motor. By timing and switching, the innovative gate design in this new motor directs the available excess energy so that it overcomes and reverses the return EMF of the rotor-stator pole combination during what would normally be the back EMF and demonstrates the creation of the second back EMF of the system. Now instead of an "equal retardation" force being produced in the back EMF region, a forward EMF is produced that is additive to the rotor/flywheel energy and not subtractive. In short, it further accelerates the rotor/flywheel.

This results in a non-conservative magnetic field along the rotor's path. The line integral of the field around that path (i.e., the net work on the rotor/flywheel to increase its energy and angular momentum) is not zero but a significant amount. Hence, the creation of an asymmetrical back EMF impulse magnetic motor: 1) takes its available excess energy from a known external source, the huge usually non-intercepted portion of the energy flow around the coil; 2) further increases the source dipolarity by this back EMF energy; and 3) produces available excess energy flow directly from the source dipole's increased broken symmetry in its fierce energy exchange with the local vacuum.

No laws of physics or thermodynamics are violated in the method and device of the present invention, and conservation of energy rigorously applies at all times. Nonetheless, by operating as an open dissipative system not in thermodynamic equilibrium with the active vacuum, the system can permissibly receive available excess energy from a known environmental source and output more energy to a load than must be input by the operator alone. As an open system not in thermodynamic equilibrium, this new and unique motor can tap in on back EMF to energize itself, loads and losses simultaneously, fully complying with known laws of physics and thermodynamics.

A search of prior art failed to reveal any devices that recycle available energy from back EMF of a permanent electromagnetic motor generator as described in the present invention. However, the following prior art patents were reviewed:

1. US Pat. No. 5,532,532 to DeVault, et al., Hermetically Sealed Super-conducting Magnet Motor.
2. US Pat. No. 5,508,575 to Elrod, Jr., Direct Drive Servovalve Having Magnetically Loaded Bearing.
3. US Pat. No. 5,451,825 to Strohm, Voltage Homopolar Machine.
4. US Pat. No. 5,371,426 to Nagate et al., Rotor For Brushless Motor.
5. US Pat. No. 5,369,325 to Nagate et al., Rotor For Brushless Electromotor And Method For Making Same.
6. US Pat. No. 5,356,534 to Zimmermann, deceased et al., Magnetic-Field Amplifier.
7. US Pat. No. 5,350,958 to Ohnishi, Super-conducting Rotating Machine, A Super-conducting Coil, And A Super-conducting Generator For Use In A Lighting Equipment Using Solar Energy.
8. US Pat. No. 5,334,894 to Nakagawa, Rotary Pulse Motor.
9. US Pat. No. 5,177,054 to Lloyd, et al., Flux Trapped Superconductor Motor and Method.
10. US Pat. No. 5,130,595 to Arora, Multiple Magnetic Paths Pulse Machine.
11. US Pat. No. 4,980,595 to Arora, Multiple Magnetic Paths Machine.
12. US Pat. No. 4,972,112 to Kim, Brushless DC Motor.
13. US Pat. No. 4,916,346 to Kliman, Composite Rotor Lamination For Use In Reluctance Homopolar, And Permanent Magnet Machines.
14. US Pat. No. 4,761,590 to Kaszman, Electric Motor.
15. US Pat. No. 4,536,230 to Landa, et al., Anisotropic Permanent Magnets.
16. US Pat. No. Re. 31,950 to Binns, Alternating Current Generators And Motors.
17. US Pat. No. 4,488,075 to DeCesare, Alternator With Rotor Axial Flux Excitation.
18. US Pat. No. 4,433,260 to Weisbord et al., Hysteresis Synchronous Motor Utilizing Polarized Rotor.
19. US Pat. No. 4,429,263 to Muller, Low Magnetic Leakage Flux Brushless Pulse Controlled D-C Motor.
20. US Pat. No. 4,423,343 to Field, II, Synchronous Motor System.
21. US Pat. No. 4,417,167 to Ishii et al., DC Brushless Motor.
22. US Pat. No. 4,265,754 to Menold, Water Treating Apparatus and Methods.
23. US Pat. No. 4,265,746 to Zimmermann, Sr. et al. Water Treating Apparatus and Methods.

24. US Pat. No. 4,222,021 to Bunker, Jr., Magnetic Apparatus Appearing To Possess a Single Pole.
25. US Pat. No. 2,974,981 to Vervest et al., Arrester For Iron Particles.
26. US Pat. No. 2,613,246 to Spodig, Magnetic System.
27. US Pat. No. 2,560,260 to Sturtevant et al., Temperature Compensated Magnetic Suspension.

SUMMARY OF THE INVENTION

The device and method of the present invention is a new permanent electromagnetic motor generator that recycles back EMF energy (regauging) thus allowing the motor to produce an energy level of COP=0.98, more or less, depending upon configuration, circuitry, switching elements and the number and size of stators, rotors and coils that comprise the motor. The rotor is fixed between two pole pieces of the stator. The motor generator is initially energized from a small starter battery means, analogous to a spark plug, that sends a small amount of energy to the motor, thus stimulating a rotating motion from the rotor. As the rotor rotates, energy is captured from the surrounding electromagnetic field containing an asymmetrical pulse wave of back EMF. The energy produced and captured can be directed in one of several directions, including returning energy to the initial starter battery, rotating a shaft for work and/or sending a current to energize a fan, light bulb or other such device.

BRIEF DESCRIPTION OF THE DRAWINGS

FIG. 1 is a top perspective view of a back EMF permanent electromagnetic motor generator with a single stator and a single rotor.

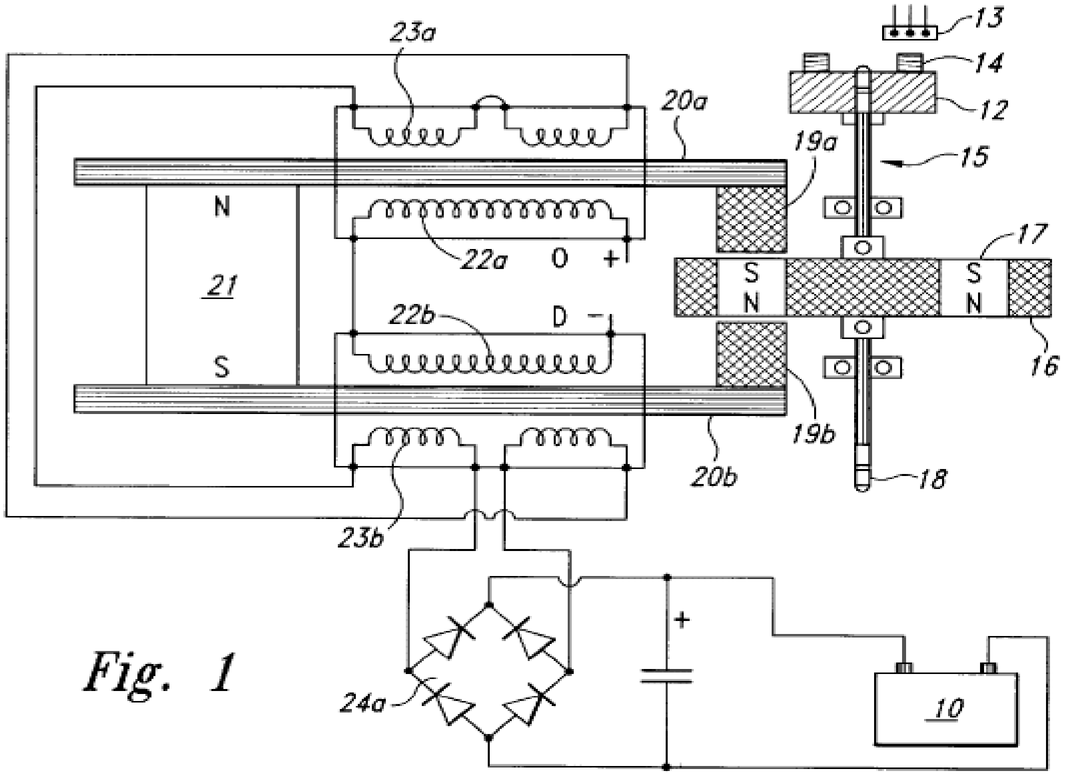

Fig. 1

FIG. 1a is a side perspective view of a timing wheel and magnetic Hall Effect uptake switch of the back EMF motor generator.
FIG. 1b is a side perspective view of the rotor of the back EMF motor generator.

FIG. 2 is a schematic drawing incorporating circuitry for the back EMF motor generator.

FIG. 3 is a box diagram showing the relationships of the back EMF motor generator circuitry.

DETAILED DESCRIPTION OF THE INVENTION

The present invention is a device and method for creating a back EMF permanent electromagnetic motor generator. As described in the Background Information, this new motor generator conforms to all applicable electrodynamic laws of physics and is in harmony with the law of the conservation of energy, the laws of electromagnetism and other related natural laws.
The back EMF permanent electromagnetic motor generator is comprised of combination of electrical, material and magnetic elements to capture available electromagnetic energy (back EMF) in a recovery rectifier or single diode from output coils. The capturing of back EMF energy is also known as regauging in the art. As an arbitrary starting point in describing this invention, an input battery, as a means of energy, sends power through a power on-off switch and then to a means for timing such as a magnetic timing switch (Hall Effect magnetic pickup switch, a semiconductor) which interfaces with or is in apposition to a magnet on a timing wheel. The timing wheel may contain any number of magnets of one or more, with the South polarity facing outward and in apposition with the Hall Effect pickup switch. The timing wheel is mounted at the end of a shaft that also runs through the centre midline of a rotor containing any number of magnets of two or more. The rotor magnets are arranged in a manner wherein they have the same polarity and are equidistant from each other. The shaft has the timing wheel mounted at one end, the rotor, and then a means for work, such as a power take off at the opposite end. However, there are other embodiments in which the position of the rotor, timing wheel and power take-off have other arrangements. The rotor is stabilized to a platform or housing means and is fixed in a stationary position within a stator.

The stator is comprised of a permanent magnet connected to a means for conducting electromagnetic energy such as two parallel bars, each bar having a magnetized pole piece at one end of each bar. The conduction material of the bar may be ferrous, powdered iron, silicon steel, stainless magnetic steel, laminations of conductive material or any other magnetic conductive material. Each bar is wrapped in a conducting means to form an input coil. The means for conducting may be copper, aluminium or any other conductive material suitable for making a coil. The primary or input coil is connected to the switching circuit. A second conductive wrapping on top of the input coil becomes a secondary or output coil. The secondary or output coil is connected to the recovery circuit. The rotor is symmetrically located between the pole pieces of the bars of the stator and contains a series of magnets all having the same polarity, North or South, with each magnet in the rotor being in apposition to the pole piece as the rotor is in rotation around the shaft.

When the rotor is energized from the battery of the switching circuit, there is an initial magnetic field that is instantly overcome as the magnetized pole pieces are in apposition with the rotor magnets. As the rotor begins to move, increasing electromagnetic energy is produced as a result of flux gaiting from the apposed magnets of the rotor and pole pieces. The coils surrounding the bars "buck" the permanent magnet connecting the bars. This is known in the art as the "buck boosting" principle. When the permanent magnet is bucked by the coils, it reverses the polarity of the pole pieces which are apposed to the rotor magnets causing the rotor to increase its rotation or spin. The energy available from the fields that are collapsing in the primary and secondary coils, which creates the back EMF within the system, is now in non-equilibrium. Through circuitry and a switching means, energy can be put back into the system. Available energy captured from the back EMF, may be applied in different directions, including re-energizing the input battery, storage in a capacitor, conversion by a recovery rectifier to be stored in the input battery, a capacitor or a secondary or recovery battery. Recovery rectifiers convert AC to DC. Available energy may be used to energize an electric bulb, fan or any other uses.

The shaft in the midline of the rotor can transfer energy in the form of work through a power take-off. The power take-off may be connected to any number of secondary shafts, wheels, gears and belts to increase or reduce torque.

This is a description of the basic invention, however, there are an innumerable number of combinations and embodiments of stators, rotors, Hall Effect magnetic pickup switches, coils, recovery rectifiers and electronic connecting modes that may be combined on a single shaft or several shafts connected in various combinations and sequences, and of various sizes. There may be any number of stators to one rotor, however, there can be only one rotor if there is a single stator. The number of Hall Effect pickup switches may vary, for example, in the case of multiple stators of high resistant coils, the coils may be parallel to form a low resistant coil so that one Hall Effect pickup with one circuit may fire all of the stators at the same time. The number of magnets in both the timing wheel and the rotor may also vary in number as well as the size and strength of the magnets in gauss units. All types of magnets may be used. The number of winds on both the input and output coils on each conducting bar may also vary in number and in conductive material.

The motor generator, as shown in FIG. 1, a top perspective view of a single stator, single rotor back EMF motor and is comprised of a means of providing energy, such as input battery 10 connected to power switch 11 (shown in FIG. 2) and Hall Effect magnetic pickup switch 13. Magnetic pickup 13 interfaces with timing wheel 12 to form a timing switch. Timing wheel 12 is comprised of four magnets 14 with the South pole of each said magnet facing outward to magnetic pickup 13. Timing wheel 12 is fixed at one end of shaft 15. Located on shaft 15 is rotor 16. Rotor 16 can be of any size, said rotor containing four rotor magnets 17. Said rotor magnets 17 are arranged in a manner so all have the same polarity. Opposite timing wheel 12 on shaft 15 is a means for work, such as a power take-off 18. Rotor 16 is mounted in a fixed position with rotor magnets 17 in apposition with magnetized pole pieces 19a and 19b. Each pole piece 19a and 19b is connected to iron bars 20a and 20b. Iron bars 20a and 20b are connected by a permanent magnet 21. A means for conduction is wrapped around iron bars 20a and 20b to form input coils 22a and 22b. Superimposed upon input coils 22a and 22b are output coils 23a and 23b. Output coils 23a and 23b are connected to full wave bridge first recovery rectifier 24a. First rectifier 24a is connected to battery 10.

FIG. 1a is a perspective side view of the back EMF Motor Generator timing wheel 12 with Hall Effect magnetic pickup switch 13 in apposition individually to each of four magnets 14 as said timing wheel 12 rotates. Said magnets 14 have the South polarity facing outward with an equidistant separation of 90.degree.

FIG. 1b is a perspective side view of rotor 16 with four rotor magnets 17 with 900 equidistant separation and having the same polarity.

FIG. 2 is a schematic diagram of the motor generator circuitry showing input coil connections from input battery 10 through power switch 11, transistors 30a,b, resistors 31a-d, through power supply lead 32 (VCC+) and to magnetic pickup 13. Magnetic pickup 13 is in apposition with timing wheel magnets 14 located on timing wheel 12. Off of magnetic pickup 13 is collector lead 33 and ground lead 34. When current is reversed, it flows through resistor 31e and transistor 30c to input battery 10. Input coils 22a,b send power to full wave bridge first recovery rectifier 24a which then sends power through switch recovery 27 back into the system, and/or to input battery 10. Output coils 23a and 23b send power through single diode second recovery rectifier 24b to recovery battery 25. In this particular embodiment, the value and type number of the components are as follows: Hall Effect magnetic pickup switch 13 is a No. 3020; transistor 30a is a No. 2N-2955; transistor 30b is a No. MPS-8599; and transistor 30c is a No. 2N-3055; resistors 31a and b are 470 ohms resistors; resistor 31b is a 2.2 K ohms resistor; resistor 31c is a 220 ohms resistor; resistor 31d is a 1 K ohms resistor; and recovery rectifier 24a is a 10 Amp, 400 volts bridge rectifier.

FIG. 3 is a box diagram showing the flow of voltage from input battery A, through recovery circuit B, switching circuit C and motor coils D. Motor coils D send available back EMF energy through recovery circuit B, and from B to recovery battery E and input battery A. Available back EMF energy can also flow from switching circuit C to recovery circuit B.

In multiple stator/rotor systems, each individual stator may be energized one at a time or all of the stators may be energized simultaneously. Any number of stators and rotors may be incorporated into the design of such multiple stator/rotor motor generator combinations. However, while there may be several stators per rotor, there can only be one rotor for a single stator. The number of stators and rotors that would comprise a particular motor generator is dependent upon the amount of power required in the form of watts. The desired size and horse power of the motor determines whether the stators will be in parallel or fired sequentially by the magnetic Hall Effect pickup switch or switches. The number of magnets incorporated into a particular rotor is dependent upon the size of the rotor and power required of the motor generator. In a multiple stator/rotor motor generator, the timing wheel may have one or more magnets, but must have one magnet Hall Effect pickup switch for each stator if the stators are not arranged in parallel. The back EMF energy is made available through the reversing of the polarity of the magnetized pole pieces thus collapsing the field around the coils and reversing the flow of energy to the recovery diodes, which is capturing the back EMF.

Individual motors may be connected in sequence with each motor having various combinations of stators and rotors or in parallel. Each rotor may have any number of rotor magnets ranging from a minimum of 2 to maximum of 60. The number of stators for an individual motor may range from 1 to 60 with the number of conducting bars ranging from 2 to 120.

What distinguishes this motor generator from all others in the art is the presence of a permanent magnet connecting the two conducting bars which transfer magnetic energy through the pole pieces to the rotor, thereby attracting the rotor between the pole pieces. With the rotor attracted in between the two pole pieces, the coils switch the polarity of the magnetic field of the pole pieces so that the rotor is repelled out. Therefore there is no current and voltage being used to attract the rotor. The only current being used is the repulsion of the rotor between the two conductive bar pole pieces thereby requiring only a small amount of current to repel the rotor. This is known as a regauging system and allows the capturing of available back EMF energy for use.

Finally, although the invention has been described with reference of particular means, materials and embodiments, it is to be understood that the invention is not limited to the particulars disclosed and extends to all equivalents within the scope of the claims.

5.0.1.3. USP #: 6,545,444; April 8, 2003 ~ US Cl. 318/798)

Device and Method for Utilizing a Monopole Motor to Create Back-EMF to Charge Batteries

A back EMF monopole motor and method using a rotor containing magnets all of the same polarity and in a monopole condition when in momentary apposition with a magnetized pole piece of a stator having the same polarity, said stator comprised of a coil with three windings: a power-coil winding, a trigger-coil winding, and a recovery-coil winding. The back EMF energy is rectified using a high voltage bridge, which transfers the back EMF energy to a high voltage capacitor for storage in a recovery battery. The stored energy can then be discharged across the recovery battery through the means of a contact rotor switch for further storage.

TECHNICAL FIELD

The invention relates generally to the capturing of available electromagnetic energy using a device and method for creating an electromagnetic force (hereinafter, EMF) and then using the available stored energy for recycling into the system as stored energy. The method of creating back EMF is the result of coupling/uncoupling a voltage source to and from a coil.

BACKGROUND

Operation of present day normal magnetic motors has the rotor pole attracting the stator pole, resulting in the generation of mechanical power from the magnets to the rotor and flywheel. During this phase, energy flows from the magnetic to the rotor/flywheel and is stored as kinetic energy in the increased rotation. A rotor pole leaving a stator pole and creating a condition of "drag" results in power having to be put back into the magnetic section by the rotor and flywheel to forcibly overcome the drag. In a perfect, friction-free motor, the net force field is therefore referred to as "most conservative". A most conservative EMF motor has maximum efficiency. Without extra energy continually fed to the motor, no net work can be done by the magnetic field, since half the time the magnetic field adds energy to the load (the rotor and flywheel) and the other half of the time it subtracts energy back from the load (the rotor and flywheel). Therefore, the total net energy output is zero in any such rotary process without additional energy input. To use a present day magnetic motor, continuous energy must be input into the motor to overcome drag and to power the motor and its load.

Motors and generators presently in use, all use such conservative fields and therefore, have internal losses. Hence, it is necessary to continually input all of the energy that the motor outputs to the load, plus more energy to cover losses inside the motor itself. EMF motors are rated for efficiency and performance by how much energy "input" into the motor actually results in "output" energy to the load. Normally, the Coefficient of Performance (hereinafter, COP) rating is used as a measure of efficiency. The COP is the actual output energy going into the load and powering it, divided by the energy that must be input into the device with its motor/load combination. If there were zero internal losses in a motor, that "perfect" motor would have a COP equal to 1.0. That is, all energy input into the motor would be output by the motor directly into the load, and none of the input energy would be lost or dissipated in the motor itself.

In magnetic motor generators presently in use, however, due to friction and design flaws, there are always internal losses and inefficiencies. Some of the energy input into the motor is dissipated in these internal losses. As a consequence, the energy that gets to the load is always less than the input energy. So a standard motor operates with a COP of less than 1.0, which is expressed as COP<1.0. An inefficient motor may have a COP=0.4 or 0.45, while a specially designed, highly efficient motor may have a COP=0.85.

The conservative field inside of a motor itself is divided into two phases. Producing a conservative field involves net symmetry between the "power out" phase from the magnetic to the rotor/flywheel and the "power back in" phase from the rotor/flywheel back to the magnetic. That is, the two flows of energy (one from the magnetic into the rotor and flywheel, and one from the rotor and flywheel back to the magnetic) are identical in magnitude but opposite in direction. Each phase alone is said to be "asymmetrical", that is, it either has: 1) a net energy flow out to the rotor/flywheel; or 2) a net energy flow back into the magnetic from the rotor/flywheel. In simplified terms, it is referred to as "power out" and "power back in" phases with respect to the motor magnetic.

For the power-out phase, energy is derived from the EMF existing between the stator pole and incoming rotor pole in an attraction mode. In this phase, the rotary motion (angular momentum and kinetic energy) of the rotor and flywheel is increased. In short, power is added to the rotor/flywheel (and thus to the load) from the fields between stator pole and rotor pole (the electromagnetic aspects of the system).

For the "power back in" phase, energy must be fed back into the magnetic from the rotor and flywheel (and the load) to overcome the drag forces existing between stator pole and outgoing rotor pole. In this phase, energy is returned back to the internal magnetic system from the rotary motion of the rotor and flywheel (the angular momentum, which is the rotational energy. times.). As is well known in physics, a rotor/flywheel's angular momentum provides a convenient way to store energy with the spinning rotor/flywheel mass acting as an energy reservoir.

Most present day conventional magnetic motors use various methods for overcoming and partially reversing back EMF. Back EMF may be defined as the return pulse from the coil out of phase and is the result of regauging, which is the process of reversing the magnetic polarity, that is, form North to South, etc. The back EMF is shorted out and the rotor is attracted back in, therefore eliminating drag. This can be accomplished by pouring in more energy, which overpowers the back EMF, thereby producing a forward EMF in that region. The energy required for this method is furnished by the operator.

It is well known in the art that changing the voltage alone creates a back EMF and requires no work. This is because to change the potential energy does not require changing the form of that potential energy, but only its magnitude. Work is the changing of the form of energy. Therefore, as long as the form of the potential energy is not changed, the magnitude can be changed without having to perform work in the process. The motor of the present invention takes advantage of this permissible operation to create back EMF asymmetrically, and thereby change its own usable available potential energy.

In an electric power system, the potential (voltage) is changed by inputting energy to do work on the internal charges of the generator or battery. This potential energy is expended within the generator (or battery) to force the internal charges apart, forming a source dipole. Then the external closedcircuit system connected to that source dipole ineptly pumps the spent electrons in the ground line back through the back EMF of the source dipole, thereby scattering the charges and killing the dipole. This shuts off the energy flow from the source dipole to the external circuit. As a consequence of this conventional method, it is a requirement to input and replace additional energy to again restore the dipole. The circuits currently utilized in most electrical generators have been designed to keep on destroying the energy flow by continually scattering all of the dipole charges and terminating the dipole. Therefore, it is necessary to keep on inputting energy to the generator to keep restoring its source dipole.

A search of prior art failed to reveal any monopole motor devices and methods that recycle available energy from back EMF to charge a battery or provide electrical energy for other uses as described in the present invention. However, the following prior art patents were reviewed:

U.S. Pat. No. 4,055,789 to Lasater, Battery Operated Motor with Back EMF Charging.
U.S. Pat. No. 2,279,690 to Z. T. Lindsey, Combination Motor Generator.

SUMMARY OF THE INVENTION

An aspect of the device and method of the present invention is a new monopole electromagnetic motor that captures back EMF energy. The captured back EMF energy maybe used to charge or store electrical energy in a recovery battery. The amount of energy recoverable, as expressed in watts, is dependent upon the configuration, circuitry, switching elements and the number and size of stators, rotors, magnets and coils that comprise the motor.

The motor uses a small amount of energy from a primary battery to "trigger" a larger input of available energy by supplying back EMF, thus increasing the potential energy of the system. The system then utilizes this available potential energy to reduce or reverse the back EMF, thereby increasing the efficiency of the motor and, therefore, the COP.

If the energy in phase 1 (the power-out phase) is increased by additional available energy in the electromagnetic themselves, then the energy in phase 1 can be made greater than the energy in phase 2 (the power-back-in phase) without the operator furnishing the energy utilized. This produces a non-conservative net field. Net power can then be taken from the rotating stator and flywheel, because the available energy added into the stator and flywheel by the additional effects is transformed by the rotor/flywheel into excess angular momentum and stored as such. Angular momentum is conserved at all times; but now some of the angular momentum added to the flywheel is evoked by additional effects in the electromagnetic rather than being furnished by the operator.

That is, the motor deliberately creates a back EMF itself and its potential energy once at a time, thereby retaining each extra force for a period of time and applying it to increase the angular momentum and kinetic energy of the rotor and flywheel. Specifically, this back EMF energy with its net force is deliberately applied in the motor of the present invention to overcome and even reverse the conventional drag-back (the back EMF). Hence less energy must be taken from the rotor and flywheel to overcome the reduced back EMF, and in the ideal case none is required since the back EMF has been overpowered and converted to forward EMF by the back EMF energy and force. In the motor, the conventional drag section of the magnetic becomes a forward-EMF section and now adds energy to the rotor/flywheel instead of subtracting it. The important feature is that the operator only pays for the small amount of energy necessary to trigger the back EMF from the primary battery, and does not have to furnish the much larger back EMF energy itself.

When the desired energy in phase 1 (the power out phase) is thus made greater than the undesired drag energy in phase 2, then part of the output power normally dragged from the rotor and flywheel by the fields in phase 2 is not required. Hence, additional power compared to the system (without the special back EMF mechanisms) is available from the rotor/flywheel. The rotor maintains additional angular momentum and kinetic energy, compared to a system, which does not produce back EMF itself. Consequently, the excess angular momentum retained by the rotor and flywheel can be utilized as additional shaft power to power an external load connected to the shaft.

In the motor, several known processes and methods are utilized which allow the motor to operate periodically as an open dissipative system (receiving available excess energy from back EMF) far from thermodynamic equilibrium, whereby. it produces and receives its excess energy from a known external source.

A method is utilized to temporarily produce a much larger source of available external energy around an energized coil. Design features of this new motor provide a device and method that can immediately produce a second increase in that energy concurrently as the energy flow is reversed. Therefore, the motor is capable of producing two asymmetrical back EMFs, one after the other, of the energy within a single coil, which dramatically increases the energy available and causes that available excess energy to then enter the circuit impulsively, being collected and utilized.
The motor utilizes this available excess back EMF energy to overcome and even reverse the drag EMF between stator pole and rotor pole, while furnishing only a small trigger pulse of energy from a primary battery necessary to control and activate the direction of the back EMF energy flow.

By using a number of such dual asymmetrical self back EMFs for every revolution of the rotor, the rotor and flywheel collectively focus all the excess impulsive inputs into increased angular momentum (expressed as energy.times.time), shaft torque, and shaft power.

Further, some of the excess energy deliberately generated in the coil by the utilization of the dual process manifests in the form of excess electrical energy in the circuit and can be utilized to charge a recovery battery(s). The excess energy can also be used to power electrical loads or to power the rotor and flywheel, with the rotor/flywheel also furnishing shaft horsepower for powering mechanical loads.

The motor utilizes a means to furnish the relatively small amount of energy from a primary battery to initiate the impulsive asymmetrical self back EMF actions. Then part of the available excess electrical power drawn off from back EMF created energy is utilized to charge a recovery battery with dramatically increased over-voltage pulses.

Design features of this monopole motor utilize one magnetic pole of each rotor and stator magnet. The number of impulsive self-back EMF in a single rotation of the rotor is doubled. Advanced designs can increase the number of self-back EMFs in a single rotor rotation with the result that there is an increase in the number of impulses per rotation, which increase the power output of this new motor.

The sharp voltage spike produced in the coil of this monopole motor by the rapidly collapsing field in the back EMF coil is connected to a recovery battery(s) in charge mode and to an external electrical load. The net result is that the coil asymmetrically creates back EMF itself in a manner adding available energy and impulse to the circuit. The available energy collected in the coil is used to reverse the back-EMF phase of the stator-rotor fields to a forward EMF condition, impulsively adding acceleration and angular momentum to the rotor and flywheel. The available back EMF energy collected in the coil is used to charge a battery. Loads can then be drawn off the battery.

A device and method in which the monopole motor alters the reaction cross section of the coils in the circuit, which momentarily changes the reaction cross section of the coil in which it is invoked. Thus, by this new motor using only a small amount of current in the form of a triggering pulse, it is able to evoke and control the immediate change of the coil's reaction cross section to this normally wasted energy-flow component. As a result, the motor captures and directs some of this usually wasted available environmental energy, collecting the available excess energy in the coil and then releasing it for use in the motor. By timing and switching, the innovative gate design in this new motor directs the available excess energy so that it overcomes and reverses the return EMF of the rotor-stator pole combination during what would normally be the back EMF and demonstrates the creation of the second back EMF of the system. Now instead of an "equal retardation" force being produced in the back EMF region, a forward EMF is produced that is additive to the rotor/flywheel energy and not subtractive. In short, it further accelerates the rotor/flywheel.

This results in a non-conservative magnetic field along the rotor's path. The line integral of the field around that path (i.e., the net work on the rotor/flywheel to increase its energy and angular momentum) is not zero but a significant amount. Hence, the creation of an asymmetrical back EMF impulse magnetic motor: 1) takes its available excess energy from a known external source, the huge usually non-intercepted portion of the energy flow around the coil; 2) further increases the source dipolarity by this back EMF energy; and 3) produces available excess energy flow directly from the source dipole's increased broken symmetry in its fierce energy exchange with the local vacuum.

By operating as an open dissipative system not in thermodynamic equilibrium with the active vacuum, the system can permissibly receive available energy from a known environmental source and then output this energy to a load. As an open dissipative system not in thermodynamic equilibrium, this new and unique monopole motor can tap in on back EMF to energize itself, loads and losses simultaneously, fully complying with known laws of physics and thermodynamics.

BRIEF DESCRIPTION OF THE DRAWINGS

FIG. 1 is a perspective side view of a monopole back EMF motor with a single stator and a single rotor.

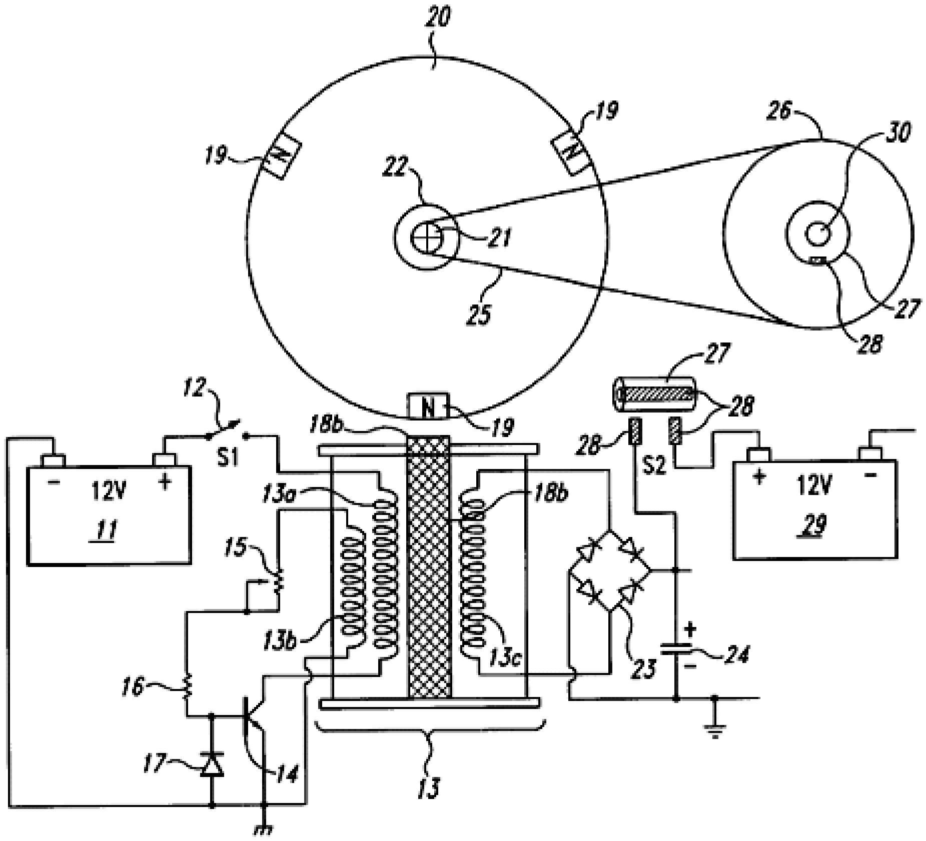

FIG. 2 is a perspective top view of a monopole back EMF motor with a single stator and a single rotor.

FIG. 3 is a block diagram demonstrating the circuitry for a monopole back EMF motor.

DETAILED DESCRIPTION OF THE INVENTION

An embodiment of the present invention is a device and method for a monopole back EMF electromagnetic motor. As described in the Summary of the Invention, this monopole motor conforms to all applicable electrodynamic laws of physics and is in harmony with the law of the conservation of energy, the laws of electromagnetism and other related natural laws of physics.

The monopole back EMF electromagnetic motor comprises a combination of elements and circuitry to capture available energy (back EMF) in a recovery element, such as a capacitor, from output coils. The available stored energy in the recovery element is used to charge a recovery battery.

As a starting point and an arbitrary method in describing this device, the flow of electrical energy and mechanical forces will be tracked from the energy's inception at the primary battery to its final storage in the recovery battery.

FIG. 1 is a perspective side view of the monopole motor according to an embodiment of the invention. As shown in FIG. 1, electrical energy from primary battery 11 periodically flows through power switch 12 and on to and through power-coil wiring 13a. In one embodiment, power switch 12 is merely an On-Off mechanical switch and is not electronic. However, the switch 12 may be a solid-state switching circuit, a magnetic Reed switch, a commutator, an optical switch, a Hall switch, or any other conventional transistorized or mechanical switch. Coil 13 is comprised of three windings: power-coil winding 13a, trigger-coil winding 13b, and recovery-coil winding 13c. However, the number of windings can be more or fewer than three, depending upon the size of the coil 13, size of the motor and the amount of available energy to be captured, stored and used, as measured in watts. Electrical energy then periodically flows from power-coil winding 13a and through transistor 14. Trigger energy also periodically flows through variable potentiometer 15 and resistor 16. Clamping diode 17 clamps the reverse base-emitter voltage of transistor switch 14 at a safe reverse-bias level that does not damage the transistor 14. Energy flows to stator 18a and pole piece 18b, an extension of stator 18a. Pole piece 18b is electrically magnetized only when transistor switch 14 is on and maintains the same polarity as the rotor poles 19--here North pole--when electrically magnetized. The North rotor poles 19a, 19b and 19c, which are attached to rotor 20, come in momentary apposition with pole piece 18b creating a momentary monopole interface. The poles 19a,b,c, which are actually permanent magnets with their North poles facing outward from the rotor 20, maintain the same polarity when in momentary apposition with pole piece 18b. Rotor 20 is attached to rotor shaft 21, which has drive pulley 22. Attached to rotor shaft 21 are rotor-shaft bearing blocks 31a and 31b, as seen in FIG. 2. As rotor 20 begins to rotate, the poles 19a,b,c respectively comes in apposition with magnetized pole piece 18b in a momentary monopole interface with energy flowing through diode bridge rectifier 23 and capacitor 24. The number of capacitors may be of a wide range, depending upon the amount of energy to be temporarily stored before being expelled or flash charged into recovery battery 29. Timing belt 25 connects drive pulley 22 on timing shaft 21 to timing wheel 26. Attached to timing wheel 26 is contact rotor 27, a copper insulated switch that upon rotation, comes in contact with brushes on mechanical switch 28. The means for counting the number of rotor revolutions may be a timing gear or a timing belt. Finally, the available energy derived from the back EMF that is stored in capacitor 24 is then discharged and stored in recovery battery 29.

FIG. 2 is a mechanical perspective top view of the monopole motor of the instant invention without electrical circuitry. Stator 18a consists of coil 13, which is comprised of three separate coil windings: power-coil winding 13a, trigger-coil winding 13b and recovery-coil winding 13c.

Pole piece 18b is at the end of stator 18a. As rotor 20, which is attached to rotor shaft 21, rotates, each pole 19 respectively comes in a momentary monopole interface with pole piece 18b. The polarity of pole piece 18b is constant when electrically magnetized. Rotor shaft 21 has rotor shaft bearing blocks 31a,b attached to it for stabilization of rotor shaft 21. Attached to rotor shaft 21 is drive pulley 22 with timing belt 25 engaged onto it. Another means for timing may be a timing gear. Timing belt 25 engages timing wheel 26 at its other end. Timing wheel 26 is attached to timing shaft 30. Shaft 30 is stabilized with timing shaft bearing blocks 32a,b. At one end of timing shaft 30 is contact rotor 27 with brush 28a, which, upon rotation of timing shaft 26, comes into momentary contact with brushes 28b,c.

FIG. 3 is a block diagram detailing the circuitry of the monopole motor. Block 40 represents primary battery 11 with energy flowing to coil block 41, which represents coil windings 13a,b,c. From coil block 41 energy flows into three directions: to trigger-circuit block 42, transistor-circuit block 43, and rectifier-circuit block 44. Energy flows from rectifier-block 44 to storage-capacitor block 45 with energy flowing from block 45 to both recovery-battery block 46 and rotor-switch block 47.

Referring to FIG. 1, the operation of the motor is described according to an embodiment of the invention. For purpose of explanation, assume that the rotor 20 is initially not moving, and one of the poles 19 is in the three o'clock position.

First, one closes the switch 12. But because the transistor 14 is off, no current flows through the winding 13a.

Next, one starts the motor by rotating the rotor 20, for example in a clockwise rotation. One may rotate the rotor by hand, or with a conventional motor-starting device or circuit (not shown).

As the rotor 20 rotates, the pole 19 rotates from the three o'clock position toward the pole piece 18b and generates a magnetic flux in the windings 13a-13c. More specifically, the stator 18a and the pole piece 18b include a ferromagnetic material such as iron. Therefore, as the pole 19 rotates nearer to the pole piece 18b, it magnetizes the pole piece 18b to a polarity--here South--that is opposite to the polarity of the pole 19--here North. This magnetization of the pole piece 18b generates a magnetic flux in the windings 13a-13c. Furthermore, this magnetization also causes a magnetic attraction between the pole 19 and the pole piece 18b. This attraction pulls the pole 19 toward the pole piece 18b, and thus reinforces the rotation of the rotor 20.
The magnetic flux in the windings 13a-13c generates respective voltages across the windings. More specifically, as the pole 19 rotates toward the pole piece 18b, the magnetization of the stator 18a and the pole piece 18b, and thus the flux in the windings 13a-13c, increase. This increasing flux generates respective voltages across the windings 13a-13c such that the dotted (top) end of each winding is more positive than the opposite end. These voltages are proportional to the rate at which the flux is increasing, and thus are proportional to the velocity of the pole 19.

At some point, the voltage across the winding 13b becomes high enough to turn on the transistor 14c. This turn-on, i.e., trigger, voltage depends on the combined serial resistance of the potentiometer 15 and the resistor 16. The higher this combined resistance, the higher the trigger voltage, and vice-versa. Therefore, one can set the level of the trigger voltage by adjusting the potentiometer 15.

In addition, depending on the level of voltage across the capacitor 24, the voltage across the winding 13c may be high enough to cause an energy recovery current to flow through the winding 13c, the rectifier 23, and the capacitor 24. Thus, when the recovery current flows, the winding 13c is converting magnetic energy from the rotating pole 19 into electrical energy, which is stored in the capacitor 24.

Once turned on, the transistor 14 generates an opposing magnetic flux in the windings 13a-13c. More specifically, the transistor 14 draws a current from the battery 11, through the switch 12 and the winding 13b. This current increases and generates an increasing magnetic flux that opposes the flux generated by the rotating pole 19.

When the opposing magnetic flux exceeds the flux generated by the rotating pole 19, the opposing flux reinforces the rotation of the rotor 20. Specifically, when the opposing flux --- which is generated by the increasing current through the winding 13a--exceeds the flux generated by the pole 19, the magnetization of the pole piece 18 inverts to North pole. Therefore, the reverse-magnetic pole piece 18 repels the pole 19, and thus imparts a rotating force to the rotor 20. The pole piece 18 rotates the rotor 20 with maximum efficiency if the pole-piece magnetization inverts to North when the centre of the pole 19 is aligned with the centre of the pole piece. One typically adjusts the potentiometer 15 to set the trigger voltage of the transistor 14 at a level that attains or approximates this maximum efficiency.

The transistor 14 then turns off before the opposing flux can work against the rotation of the rotor 20. Specifically, if the pole piece 18 remains magnetized to North pole, it will repel the next pole 19 in a direction--counter clockwise in this example--opposite to the rotational direction of the rotor 20. Therefore, the motor turns the transistor 14, and thus demagnetizes the pole piece 18, before this undesirable repulsion occurs. More specifically, when the opposing flux exceeds the flux generated by the pole 19, the voltage across the winding 13b reverses polarity such that the dotted end is less positive than the opposite end. The voltage across the winding 13b decreases as the opposing flux increases. At some point, the voltage at the base of the transistor decreases to a level that turns off the transistor 14. This turn-off point depends on the combined resistance of the potentiometer 15 and resistor 16 and the capacitance (not shown) at the transistor base. Therefore, one can adjust the potentiometer 15 or use other conventional techniques to adjust the timing of this turn-off point.

The rectifier 23 and capacitor 24 recapture the energy that is released by the magnetic field ---and that would otherwise be lost--when the transistor 14 turns off. Specifically, turning off the transistor 14 abruptly cuts off the current that flows through the winding 13a. This generates voltage spikes across the windings 13a-13c where the dotted ends are less positive than the respective opposite ends. These voltage spikes represent the energy released as the current-induced magnetization of the stator 18a and the pole piece 18b collapses, and may have a magnitude of several hundred volts. But as the voltage spike across the winding 13c increases above the sum of the two diode drops of the rectifier 23, it causes an energy-recovery current to flow through the rectifier 23 and the voltage across the capacitor 24 charge the capacitor 24. Thus, a significant portion of the energy released upon collapse of the current-induced magnetic field is recaptured and stored as a voltage in the capacitor 24. In addition, the diode 17 prevents damage to the transistor 14 by clamping the reverse base-emitter voltage caused by the voltage spike across the winding 13b.

The recaptured energy can be used in a number of ways. For example, the energy can be used to charge a battery 29. In one embodiment, the timing wheel 26 makes two revolutions for each revolution of the rotor 20. The contact rotor 27 closes a switch 28, and thus dumps the charge on the capacitor 24 into the battery 29, once each revolution of the wheel 26. Other energy-recapture devices and techniques can be used as well.

One can stop the rotor 20 by braking it or by opening the switch 12.
Other embodiments of the monopole motor are contemplated. For example, instead of remaining closed for the entire operation of the motor, the switch 12 may be a conventional optical switch or a Hall switch that opens and closes automatically at the appropriate times. To increase the power of the motor, one can increase the number of stators 18a and pole pieces 18b, the number of poles 19, or both. Furthermore, one can magnetize the stator 18a and pole piece 18b during the attraction of the pole 19 instead of or in addition to magnetizing the stator and pole piece during the repulsion of the pole 19. Moreover, the stator 18a may be omitted such that the coil 13 has an air coil, or the stator 18a and the pole piece 18b may compose a permanent magnet. In addition, although the transistor 14 is described as being a bipolar transistor, it may be a MOS transistor. Furthermore, the recaptured energy may be used to recharge the battery 11. In addition, although described as rotating in a clockwise direction, the rotor 20 can rotate in a counter clockwise direction. Moreover, although described as attracting a rotor pole 19 when no current flows through winding 13a and repelling the pole 19 when a current flows through winding 13a, the pole piece 18b may be constructed so that it attracts the pole 19 when a current flows through winding 13a and repels the pole 19 when no current flows through winding 13a.

In multiple stator/rotor systems, each individual stator may be energized one at a time or all of the stators may be energized simultaneously. Any number of stators and rotors may be incorporated into the design of such multiple stator/rotor monopole motor combinations. However, while there may be several stators per rotor, there can only be one rotor for a single stator. The number of stators and rotors that would comprise a particular motor is dependent upon the amount of power required in the form of watts. Any number of magnets, used in a monopole fashion, may comprise a single rotor. The number of magnets incorporated into a particular rotor is dependent upon the size of the rotor and power required of the motor. The desired size and horse power of the motor determines whether the stators will be in parallel or fired sequentially. Energy is made accessible through the capturing of available energy from the back EMF as a result of the unique circuitry and timing of the monopole motor. Individual motors may be connected in sequence with each motor having various combinations of stators and rotors or in parallel. Each rotor may have any number of rotor magnets, all arranged without change of polarity. The number of stators for an individual motor may also be of a wide range.

One feature that distinguishes this motor from all others in the art is the use of monopole magnets in momentary apposition with the pole piece of the stator maintaining the same polarity when magnetized. In this particular embodiment, there are three magnets and one pole piece, said pole piece an extension of a permanent-magnet stator. Finally, although the invention has been described with reference of particular means, materials and embodiments, it is to be understood that the invention is not limited to the particulars disclosed and extends to all equivalents within the scope of the claims.

5.0.1.4. US patent application # 20020097013; July 25, 2002;

Permanent Electromagnetic Motor Generator

This invention is a back EMF permanent electromagnetic motor generator and method using a regauging process for capturing available electromagnetic energy in the system. The device is comprised of a rotor with magnets of the same polarity; a timing wheel in apposition to a magnetic Hall Effect pickup switch semiconductor; and a stator comprised of two bars connected by a permanent magnet with magnetized pole pieces at one end of each bar. There are input and output coils created by wrapping each bar with a conducting material such as copper wire. Energy from the output coils is transferred to a recovery rectifier or diode. The magnets of the rotor, which is located on a shaft along with the timing wheel, are in apposition to the magnetized pole pieces of the two bars. The invention works through a process of regauging, that is, the flux fields created by the coils is collapsed because of a reversal of the magnetic field in the magnetized pole pieces thus allowing the capture of available back EMF energy. Additional available energy may be captured and used to re-energize the battery, and/or sent in another direction to be used as work. As an alternative, the available back EMF energy may be dissipated into the system.

BACKGROUND OF THE INVENTION

[0001] 1. Field of the Invention

[0002] The invention relates generally to the capturing of electromagnetic energy using a method and device to create back EMF (electromagnetic force) and re-phasing of the back EMF to recycle and capture the available back EMF energy. Back EMF is also referred to as regauging and may be defined as energy created by the magnetic field from coils, and only by coils, and not by magnets.

[0003] 2. Background Information and Related Art

[0004] Operation of a normal magnetic motor has the rotor pole attracting the stator pole, resulting in the generation of power from the magnets to the rotor and flywheel. During this phase, energy flows from the magnetic to the rotor/flywheel and is stored in the increased rotation. A rotor pole leaving a stator pole and creating a condition of drag-back results in power having to be put back into the magnetic section by the rotor and flywheel to forcibly overcome the drag-back. In a perfect, friction-free motor, the net force field is therefore referred to as most conservative. In other words, a most conservative EMF motor has maximum efficiency. Without extra energy continually fed to the motor, no net work can be done by the magnetic field, since half the time the magnetic field adds energy to the load (the rotor and flywheel) and the other half of the time it subtracts energy back from the load (the rotor and flywheel). Therefore the total net energy output is zero in any such rotary process without additional energy input. To use a present day magnetic motor, continuous energy must be input into the motor to overcome drag-back and to power the motor and its load.

[0005] Present EMF motors and generators all use such conservative fields and therefore, have internal losses. Hence, it is necessary to continually input all of the energy that the motor outputs to the load, plus more energy to cover losses inside the motor itself. EMF motors are rated for efficiency and performance by how much energy input into the motor actually results in output energy to the load. Normally, the Coefficient of Performance (COP) rating is used as a measure of efficiency. The COP is the actual output energy going into the load and powering it, divided by the energy that must be input into the device with its load. COP is the power out into the load, divided by the power input into the motor/load combination. If there were zero internal losses in a motor, that "perfect" motor would have a coefficient of performance (COP) equal to 1.0. That is, all energy input into the motor would be output by the motor directly into the load, and none of the input energy would be lost or dissipated in the motor itself.

[0006] In magnetic motor generators presently in use, however, due to friction and design flaws, there are always internal losses and inefficiencies. Some of the energy input into the motor is dissipated in these internal losses. As a consequence, the energy that gets to the load is always less than the input energy. So a standard motor operates with a COP of less than 1.0 which is expressed as COP<1.0. An inefficient motor may have a COP=0.4 or 0.45, while a specially designed, highly efficient motor may have a COP=0.85.

[0007] The conservative field inside of a motor itself can be divided into two phases. Producing a conservative field involves net symmetry between the "power out" phase from the magnetic to the rotor/flywheel and the "power back in" phase from the rotor/flywheel back to the magnetic. That is, the two flows of energy (one from the magnetic into the rotor and flywheel, and one from the rotor and flywheel back to the magnetic) are identical in magnitude but opposite in direction. Each phase alone is said to be "asymmetrical"; that is, it either has: 1) a net energy flow out to the rotor/flywheel; or 2) a net energy flow back into the magnetic from the rotor/flywheel. In simplified terms, it is referred to as "power out" and "power back in" phases with respect to the motor magnetic. Hence, the two asymmetrical phases are: 1) the power-out phase; and 2) the "power back in" phase, with reference to the magnetic.

[0008] For the power-out phase, energy is derived from the EMF existing between the stator pole and incoming rotor pole in an attraction mode. In this phase, the rotary motion (angular momentum and kinetic energy) of the rotor and flywheel is increased. In short, power is added to the rotor/flywheel (and thus to the load) from the fields between stator pole and rotor pole (the electromagnetic aspects of the system).

[0009] For the "power back in" phase, energy must be fed back into the magnetic from the rotor and flywheel (and the load) to overcome the drag-back forces existing between stator pole and outgoing rotor pole. In this phase, energy is returned back to the internal magnetic system from the rotary motion of the rotor and flywheel (the angular momentum, which is the rotational energy times time). As is well known in physics, a rotor/flywheel's angular momentum provides a convenient way to store energy with the spinning rotor/flywheel mass acting as an energy reservoir.

[0010] All present day conventional magnetic motors use various methods for overcoming and partially reversing back EMF. Back EMF is the return pulse from the coil out of phase and is also referred to as regauging. The back EMF is shorted out and the rotor is attracted back in, therefore eliminating back drag. This can be accomplished by pouring in more energy, which overpowers the back EMF, thereby producing a forward EMF in that region. The energy required for this method must be furnished by the operator.

[0011] The motor of the present invention uses only a small amount of energy to "trigger" a much larger input of available energy by supplying back EMF, thus increasing the potential energy of the system. It then utilizes this excess potential energy to reduce or reverse back EMF, thereby increasing the efficiency of the motor and, therefore, the COP.

[0012] If the energy in phase 1 (the power-out phase) is increased by additional available energy in the electromagnetic themselves, then the energy in phase 1 can be made greater than the energy in phase 2 (the power-back-in phase) without the operator furnishing the energy utilized. This produces a non-conservative net field. Net power can then be taken from the rotating stator and flywheel, because the available energy added into the stator and flywheel by the additional effects, is transformed by the rotor/flywheel into excess angular momentum and stored as such. Angular momentum is conserved at all times; but now some of the angular momentum added to the flywheel is evoked by additional effects in the electromagnetic rather than being furnished by the operator.

[0013] Electrodynamics assume that the potential available energy of any system can be changed at will and without cost. This is back EMF and is well-known in physics. It is also routinely employed by electrodynamics in the theoretical aspects. But to simplify the mathematics, electrodynamics will create a back EMF twice simultaneously, each back EMF carefully selected just so that the two available forces that are produced are equal and opposite and cancel each other "symmetrically". This is referred to as "symmetrical back EMF" . A symmetrical back EMF system cannot produce a COP>1.0.

[0014] On the other hand, the motor of the present invention deliberately creates a back EMF itself and its potential energy only once at a time, thereby retaining each extra force for a period of time and applying it to increase the angular momentum and kinetic energy of the rotor and flywheel. Specifically, this back EMF energy with its net force is deliberately applied in the motor of the present invention to overcome and even reverse the conventional drag-back (the back EMF). Hence less energy must be taken from the rotor and flywheel to overcome the reduced back EMF, and in the ideal case none is required since the back EMF has been overpowered and converted to forward EMF by the back EMF energy and force. In the motor of the present invention, the conventional back-drag section of the magnetic becomes a forward-EMF section and now adds energy to the rotor/flywheel instead of subtracting it. The important feature is that the operator only pays for the small amount of energy necessary to trigger the back EMF, and does not have to furnish the much larger back EMF energy itself.

[0015] When the desired energy in phase 1 (the power out phase) is thus made greater than the undesired "drag-back" energy in phase 2, then part of the output power normally dragged back from the rotor and flywheel by the fields in phase 2 is not required. Hence, additional power compared to the system (without the special back EMF mechanisms) is available from the rotor/flywheel. The rotor maintains additional angular momentum and kinetic energy, compared to a system which does not produce back EMF itself. Consequently, the excess angular momentum retained by the rotor and flywheel can be utilized as additional shaft power to power an external load connected to the shaft.

[0016] A standard magnetic motor operates as the result of the motor being furnished with external energy input into the system by the operator to reduce phase 2 (power back into the magnetic from the rotor/flywheel) by any of several methods and mechanisms. The primary purpose of this external energy input into the system is to overcome the back EMF and also provide for the inevitable energy losses in the system. There is no input of energy separate from the operator input. Therefore, the COP of any standard magnetic motor is COP less than 1.0. The efficiency of a standard magnetic motor varies from less than 50% to a maximum of about 85% , and so has a COP<1.0. When nothing is done in the motor that will produce a reduction of the back EMF without the operator inputting all the energy for it, then for even a frictionless, ideal permanent magnet motor, the COP can never exceed 1.0.

[0017] Until the introduction of the motor of the present invention, it has been standard universal practice that the operator must furnish all energy used to reduce the back EMF, provide for the internal losses, and power the load. It is therefore a common belief by the scientific community that an ideal (loss-less) permanent magnet motor cannot exceed COP=1.0. And that is true, so long as the operator himself must furnish all the energy. Further, since real permanent magnetic motors have real internal losses, some of the input energy is always lost in the motor itself, and that lost energy is not available for powering the rotor/flywheel and load. Hence a real permanent magnetic motor of the conventional kind will always have a COP<1.0.

[0018] The common assumption that the COP of a motor is limited to less than 1.0 is not necessarily true, and that COP>1.0 is permitted without violating the laws of nature, laws of physics, or laws of thermodynamics. However, it can immediately be seen that any permanent magnet motor exhibiting a COP>1.0 must have some available energy input returning in the form of back EMF.

[0019] A problem relates to how back EMF energy can be obtained from a circuit's external environment for the specific task of reducing the back-drag EMF without the operator having to supply any input of that excess energy. In short, the ultimate challenge is to find a way to cause the system to: 1) become an open dissipative system, that is, a system receiving available excess energy from its environment, in other words, from an external source; and 2) use that available excess energy to reduce the drag-back EMF between stator and rotor poles as the rotor pole is leaving the stator pole. If this objective can be accomplished, the system will be removed from thermodynamic equilibrium. Instead, it will be converted to a system out-of-thermodynamic equilibrium. Such a system is not required to obey classical equilibrium thermodynamics.

[0020] Instead, an out-of-equilibrium thermodynamic system must obey the thermodynamics of open systems far from the established and well-known parameters of thermodynamic equilibrium. As is well known in the physics of thermodynamics, such open systems can permissibly: 1) self-order; 2) self-oscillate; 3) output more back EMF energy than energy input by the operator (the available excess back EMF energy is received from an external source and some energy is input by the operator as well); 4) power itself as well as its loads and losses simultaneously (in that case, all the energy is received from the available external source and there is no input energy from the operator); and 5) exhibit negentropy, that is, produce an increase of energy that is available in the system, and that is independent of the energy put into the system by the operator. As a definition, entropy roughly corresponds to the energy of a system that has become unavailable for use. Negentropy corresponds to additional energy of a system that has become available for use.

[0021] In the back EMF permanent magnet electromagnetic motor generator of the present invention, several known processes and methods are utilized which allow the invention to operate periodically as an open dissipative system (receiving available excess energy from back EMF) far from thermodynamic equilibrium, whereby it produces and receives its excess energy from a known external source.

[0022] A method is utilized to temporarily produce a much larger source of available external energy around an energized coil. Then the unique design features of this new motor provides a method and mechanism that can immediately produce a second increase in that energy, concurrently as the energy flow is reversed. Therefore, the motor is capable of producing two asymmetrical back EMFs, one after the other, of the energy within a single coil, which dramatically increases the energy available and causes that available excess energy to then enter the circuit impulsively, being collected and utilized.

[0023] The present motor utilizes this available excess back EMF energy to overcome and even reverse the back-drag EMF between stator pole and rotor pole, while furnishing only a small trigger pulse of energy necessary to control and activate the direction of the back EMF energy flow.

[0024] By using a number of such dual asymmetrical self back EMFs for every revolution of the rotor, the rotor and flywheel collectively focus all the excess impulsive inputs into increased angular momentum (expressed as energy.times.time), shaft torque, and shaft power.

[0025] Further, some of the excess energy deliberately generated in the coil by the utilization of the dual process manifests in the form of excess electrical energy in the circuit and is utilized to power electrical loads, e.g., a lamp, fan, motor, or other electrical devices. The remainder of the excess energy generated in the coil can be used to power the rotor and flywheel, with the rotor/flywheel also furnishing shaft horsepower for powering mechanical loads.

[0026] This new and unique motor utilizes a means to furnish the relatively small amount of energy to initiate the impulsive asymmetrical self back EMF actions. Then part of the available excess electrical power drawn off from the back EMFs is utilized to recharge the battery with dramatically increased over voltage pulses.

[0027] The unique design features of this motor utilize both north and south magnetic poles of each rotor and stator magnet. Therefore, the number of impulsive self back EMFs in a single rotation of the rotor is doubled. Advanced designs increase the number of self back EMFs in a single rotor rotation with the result that there is an increase in the number of impulses per rotation which increase the power output of this new motor.

[0028] The sharp voltage pulse produced in the coil of this new motor by the rapidly collapsing field in the back EMF coil is connected to a battery in charge mode and to an external electrical load. The net result is that the coil asymmetrically creates back EMF itself in a manner adding available energy and impulse to the circuit. The excess available energy collected in the coil is used to reverse the back-EMF phase of the stator-rotor fields to a forward EMF condition, impulsively adding acceleration and angular momentum to the rotor and flywheel. At the same time, a part of the excess energy collected in the coil is used to power electrical loads such as charging a battery and operating a lamp or such other device.

[0029] It is well known in the art that changing the voltage alone creates a back EMF and requires no work. This is because to change the potential energy does not require changing the form of that potential energy, but only its magnitude. Work is rigorously the changing of the form of energy. Therefore, as long as the form of the potential energy is not changed, the magnitude can be changed without having to perform work in the process. The motor of the present invention takes advantage of this permissible operation to create back EMF asymmetrically, and thereby change its own usable available potential energy.

[0030] In an electric power system, the potential (voltage) is changed by inputting energy to do work on the internal charges of the generator or battery. This potential energy is expended within the generator (or battery) to force the internal charges apart, forming a source dipole. Then the external closed circuit system connected to that source dipole ineptly pumps the spent electrons in the ground line back through the back EMF of the source dipole, thereby scattering the charges and killing the dipole. This shuts off the energy flow from the source dipole to the external circuit. As a consequence of that conventional method, it is a requirement to input and replace additional energy to again restore the dipole. The circuits currently utilized in most electrical generators have been designed to keep on destroying the energy flow by continually scattering all of the dipole charges and terminating the dipole. Therefore, it is necessary to keep on inputting energy to the generator to keep restoring its source dipole.

[0031] An investigation of particle physics is required to see what furnishes the energy to the external circuit. Since neither a battery nor a generator furnishes energy to the external circuit, but only furnishes energy to form the source dipole, a better understanding of the electric power principle is required to fully understand how this new motor functions. A typical battery uses its stored chemical energy to form the source dipole. A generator utilizes its input shaft energy to rotate, forming an internal magnetic field in which the positive charges are forced to move in one direction and the negative charges in the reverse direction, thereby forming the source dipole. In other words, the energy input into the generator does nothing except form the source dipole. None of the input energy goes to the external circuit. If increased current is drawn into the external load, there also is increased spent electron flow being rammed back through the source dipole, destroying it faster. Therefore, dipole-restoring-energy has to be inputted faster. The chemical energy of the battery also is expended only to separate its internal charges and form its source dipole. Again, if increased current and power is drawn into the external load, there is increased spent electron flow being rammed back through the source dipole, destroying it faster. This results in a depletion of the battery's stored energy faster, by forcing it to have to keep restoring the dipole faster.

[0032] Once the generator or battery source dipole is formed (the dipole is attached also to the external circuit), it is well known in particle physics that the dipole (as is any charge) is a broken symmetry in the vacuum energy flux. By definition, this means that the source dipole extracts and orders part of that energy received from its vacuum interaction, and pours that energy out as the energy flowing through all space surrounding the external conductors in the attached circuit. Most of this enormous energy flow surging through space surrounding the external circuit does not strike the circuit at all, and does not get intercepted or utilized. Neither is it diverged into the circuit to power the electrons, but passes on out into space and is just "wasted". Only a small "sheath" of the energy flow along the surface of the conductors strikes the surface charges in those conductors and is thereby diverged into the circuit to power the electrons. Standard texts show the huge available but wasted energy flow component, but only calculate the small portion of the energy flow that strikes the circuit, is caught by it, and is utilized to power it.

[0033] In a typical circuit, the huge available but "wasted" component of the energy flow is about 10.sup.13 times as large as is the small component intercepted by the surface charges and diverged into the circuit to power it. Hence, around every circuit and circuit element such as a coil, there exists a huge non-intercepted, non-diverged energy flow that is far greater than the small energy flow being diverted and used by the circuit or element.

[0034] Thus there exists an enormous untapped energy flow immediately surrounding every EMF power circuit, from which available excess energy can be intercepted and collected by the circuit, if respective non-linear actions are initiated that sharply affect and increase the reaction cross section of the circuit (i.e., its ability to intercept this available but usually wasted energy flow).

[0035] The method in which the motor of the present invention alters the reaction cross section of the coils in the circuit, is by a novel use, which momentarily changes the reaction cross section of the coil in which it is invoked. Thus, by this new motor using only a small amount of current in the form of a triggering pulse, it is able to evoke and control the immediate change of the coil's reaction cross section to this normally wasted energy flow component. As a result, the motor captures and directs some of this usually wasted environmental energy, collecting the available excess energy in the coil and then releasing it for use in the motor. By timing and switching, the innovative gate design in this new motor directs the available excess energy so that it overcomes and reverses the return EMF of the rotor-stator pole combination during what would normally be the back EMF and demonstrates the creation of the second back EMF of the system. Now instead of an "equal retardation" force being produced in the back EMF region, a forward EMF is produced that is additive to the rotor/flywheel energy and not subtractive. In short, it further accelerates the rotor/flywheel.

[0036] This results in a non-conservative magnetic field along the rotor's path. The line integral of the field around that path (i.e., the net work on the rotor/flywheel to increase its energy and angular momentum) is not zero but a significant amount. Hence, the creation of an asymmetrical back EMF impulse magnetic motor: 1) takes its available excess energy from a known external source, the huge usually non-intercepted portion of the energy flow around the coil; 2) further increases the source dipolarity by this back EMF energy; and 3) produces available excess energy flow directly from the source dipole's increased broken symmetry in its fierce energy exchange with the local vacuum.

[0037] No laws of physics or thermodynamics are violated in the method and device of the present invention, and conservation of energy rigorously applies at all times. Nonetheless, by operating as an open dissipative system not in thermodynamic equilibrium with the active vacuum, the system can permissibly receive available excess energy from a known environmental source and output more energy to a load than must be input by the operator alone. As an open system not in thermodynamic equilibrium, this new and unique motor can tap in on back EMF to energize itself, loads and losses simultaneously, fully complying with known laws of physics and thermodynamics.

[0038] A search of prior art failed to reveal any devices that recycle available energy from back EMF of a permanent electromagnetic motor generator as described in the present invention. However, the following prior art patents were reviewed:

[0039] 1. U.S. Pat. No. 5,532,532 to DeVault, et al., Hermetically Sealed Super-conducting Magnet Motor.

[0040] 2. U.S. Pat. No. 5,508,575 to Elrod, Jr., Direct Drive Servovalve Having Magnetically Loaded Bearing.
[0041] 3. U.S. Pat. No. 5,451,825 to Strohm, Voltage Homopolar Machine.

[0042] 4. U.S. Pat. No. 5,371,426 to Nagate, et al., Rotor For Brushless Motor.

[0043] 5. U.S. Pat. No. 5,369,325 to Nagate, et al., Rotor For Brushless Electromotor And Method For Making Same.

[0044] 6. U.S. Pat. No. 5,356,534 to Zimmermann, deceased, et al., Magnetic-Field Amplifier.

[0045] 7. U.S. Pat. No. 5,350,958 to Ohnishi, Super-conducting Rotating Machine, A Super-conducting Coil, And A Super-conducting Generator For Use In A Lighting Equipment Using Solar Energy.

[0046] 8. U.S. Pat. No. 5,334,894 to Nakagawa, Rotary Pulse Motor.
[0047] 9. U.S. Pat. No. 5,177,054 to Lloyd, et al., Flux Trapped Superconductor Motor and Method.

[0048] 10. U.S. Pat. No. 5,130,595 to Arora, Multiple Magnetic Paths Pulse Machine.

[0049] 11. U.S. Pat. No. 4,980,595 to Arora, Multiple Magnetic Paths Machine.

[0050] 12. U.S. Pat. No. 4,971,112 to Kim, Brushless DC Motor.

[0051] 13. U.S. Pat. No. 4,916,346 to Klimani, Composite Rotor Lamination For Use In Reluctance Homopolar. And Permanent Magnet Machines.

[0052] 14. U.S. Pat. No. 4,761,590 to Kaszman, Electric Motor.

[0053] 15. U.S. Pat. No. 4,536,230 to Landa, et al., Anisotropic Permanent Magnets.

[0054] 16. U.S. Pat. No. Re. 31,950 to Binns, Alternating Current Generators and Motors.

[0055] 17. U.S. Pat. No. 4,488,075 to DeCesare, Alternator with Rotor Axial Flux Excitation.

[0056] 18. U.S. Pat. No. 4,433,260 to Weisbord et al., Hysteresis Synchronous Motor Utilizing Polarized Rotor.

[0057] 19. U.S. Pat. No. 4,429,263 to Muller, Low Magnetic Leakage Flux Brushless Pulse Controlled D-C Motor.

[0058] 20. U.S. Pat. No. 4,423,343 to Field, II, Synchronous Motor System.

[0059] 21. U.S. Pat. No. 4,417,167 to Ishii, et al., DC Brushless Motor.

[0060] 22. U.S. Pat. No. 4,265,754 to Menold, Water Treating Apparatus and Methods.

[0061] 23. U.S. Pat. No. 4,265,746 to Zimmermann, Sr., et al. Water Treating Apparatus and Methods.

[0062] 24. U.S. Pat. No. 4,222,021 to Bunker, Jr., Magnetic Apparatus Appearing To Possess a Single Pole.

[0063] 25. U.S. Pat. No. 2,974,981 to Vervest et al., Arrester For Iron Particles.

[0064] 26. U.S. Pat. No. 2,613,246 to Spodig, Magnetic System.

[0065] 27. U.S. Pat. No. 2,560,260 to Sturtevant, et al., Temperature Compensated Magnetic Suspension.

SUMMARY OF THE INVENTION

[0066] The device and method of the present invention is a new permanent electromagnetic motor generator that recycles back EMF energy (regauging) thus allowing the motor to produce an energy level of COP=0.98, more or less, depending upon configuration, circuitry, switching elements and the number and size of stators, rotors and coils that comprise the motor. The rotor is fixed between two pole pieces of the stator. The motor generator is initially energized from a small starter battery means, analogous to a spark plug, that sends a small amount of energy to the motor, thus stimulating a rotating motion from the rotor. As the rotor rotates, energy is captured from the surrounding electromagnetic field containing an asymmetrical pulse wave of back EMF. The energy produced and captured can be directed in one of several directions, including returning energy to the initial starter battery, rotating a shaft for work and/or sending a current to energize a fan, light bulb or other such device.

BRIEF DESCRIPTION OF THE DRAWINGS

[0067] FIG. 1 is a top perspective view of a back EMF permanent electromagnetic motor generator with a single stator and a single rotor.

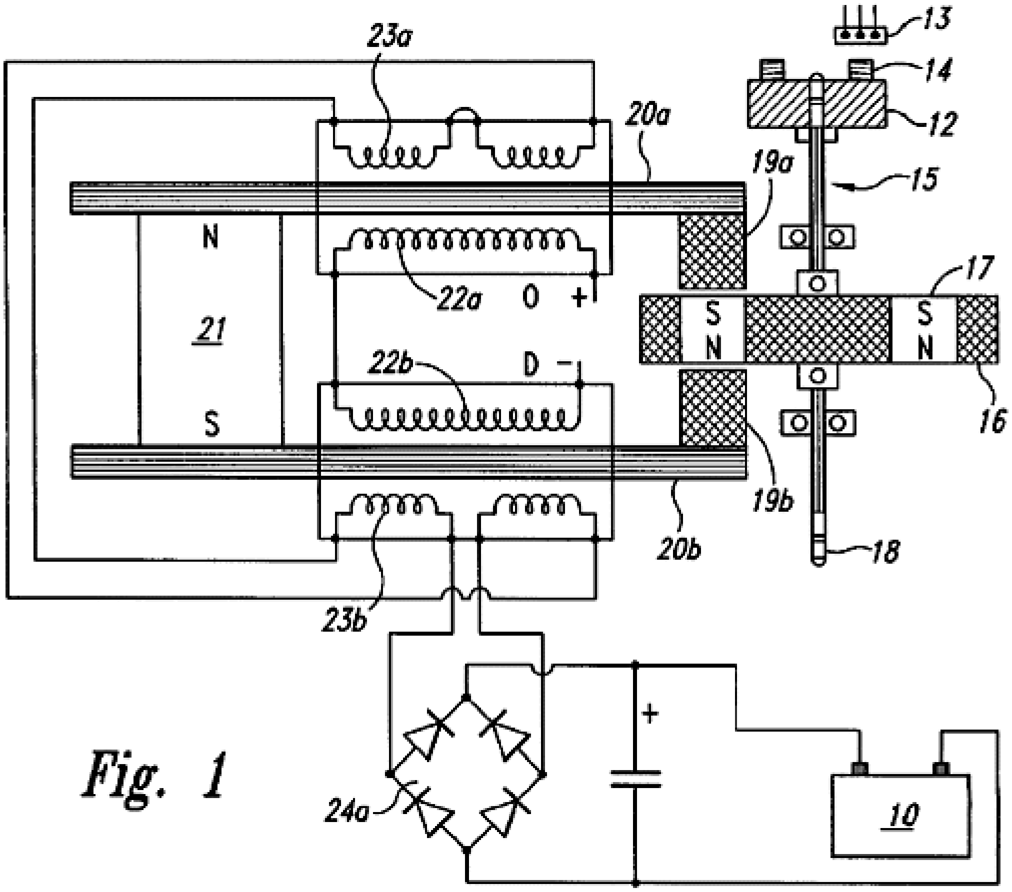

Fig. 1

[0068] FIG. 1a is a side perspective view of a timing wheel and magnetic Hall Effect uptake switch of the back EMF motor generator.

[0069] FIG. 1b is a side perspective view of the rotor of the back EMF motor generator.

[0070] FIG. 2 is a schematic drawing incorporating circuitry for the back EMF motor generator.

[0071] FIG. 3 is a box diagram showing the relationships of the back EMF motor generator circuitry.

DETAILED DESCRIPTION OF THE INVENTION

[0072] The present invention is a device and method for creating a back EMF permanent electromagnetic motor generator. As described in the Background Information, this new motor generator conforms to all applicable electrodynamic laws of physics and is in harmony with the law of the conservation of energy, the laws of electromagnetism and other related natural laws.

[0073] The back EMF permanent electromagnetic motor generator is comprised of combination of electrical, material and magnetic elements to capture available electromagnetic energy (back EMF) in a recovery rectifier or single diode from output coils. The capturing of back EMF energy is also known as regauging in the art. As an arbitrary starting point in describing this invention, an input battery, as a means of energy, sends power through a power on-off switch and then to a means for timing such as a magnetic timing switch (Hall Effect magnetic pickup switch, a semiconductor) which interfaces with or is in apposition to a magnet on a timing wheel. The timing wheel may contain any number of magnets of one or more, with the South polarity facing outward and in apposition with the Hall Effect pickup switch. The timing wheel is mounted at the end of a shaft that also runs through the centre midline of a rotor containing any number of magnets of two or more. The rotor magnets are arranged in a manner wherein they have the same polarity and are equidistant from each other. The shaft has the timing wheel mounted at one end, the rotor, and then a means for work, such as a power take off at the opposite end. However, there are other embodiments in which the position of the rotor, timing wheel and power take-off have other arrangements. The rotor is stabilized to a platform or housing means and is fixed in a stationary position within a stator.

[0074] The stator is comprised of a permanent magnet connected to a means for conducting electromagnetic energy such as two parallel bars, each bar having a magnetized pole piece at one end of each bar. The conduction material of the bar may be ferrous, powdered iron, silicon steel, stainless magnetic steel, laminations of conductive material or any other magnetic conductive material. Each bar is wrapped in a conducting means to form an input coil. The means for conducting may be copper, aluminium or any other conductive material suitable for making a coil. The primary or input coil is connected to the switching circuit. A second conductive wrapping on top of the input coil becomes a secondary or output coil. The secondary or output coil is connected to the recovery circuit. The rotor is symmetrically located between the pole pieces of the bars of the stator and contains a series of magnets all having the same polarity, North or South, with each magnet in the rotor being in apposition to the pole piece as the rotor is in rotation around the shaft.

[0075] When the rotor is energized from the battery of the switching circuit, there is an initial magnetic field that is instantly overcome as the magnetized pole pieces are in apposition with the rotor magnets. As the rotor begins to move, increasing electromagnetic energy is produced as a result of flux gaiting from the apposed magnets of the rotor and pole pieces. The coils surrounding the bars "buck" the permanent magnet connecting the bars. This is known in the art as the "buck boosting" principle. When the permanent magnet is bucked by the coils, it reverses the polarity of the pole pieces which are apposed to the rotor magnets causing the rotor to increase its rotation or spin. The energy available from the fields that are collapsing in the primary and secondary coils, which creates the back EMF within the system, is now in non-equilibrium. Through circuitry and a switching means, energy can be put back into the system. Available energy captured from the back EMF, may be applied in different directions, including re-energizing the input battery, storage in a capacitor, conversion by a recovery rectifier to be stored in the input battery, a capacitor or a secondary or recovery battery. Recovery rectifiers convert AC to DC. Available energy may be used to energize an electric bulb, fan or any other uses.

[0076] The shaft in the midline of the rotor can transfer energy in the form of work through a power take-off. The power take-off may be connected to any number of secondary shafts, wheels, gears and belts to increase or reduce torque.

[0077] This is a description of the basic invention, however, there are an innumerable number of combinations and embodiments of stators, rotors, Hall Effect magnetic pickup switches, coils, recovery rectifiers and electronic connecting modes that may be combined on a single shaft or several shafts connected in various combinations and sequences, and of various sizes. There may be any number of stators to one rotor, however, there can be only one rotor if there is a single stator. The number of Hall Effect pickup switches may vary, for example, in the case of multiple stators of high resistant coils, the coils may be parallel to form a low resistant coil so that one Hall Effect pickup with one circuit may fire all of the stators at the same time. The number of magnets in both the timing wheel and the rotor may also vary in number as well as the size and strength of the magnets in gauss units. All types of magnets may be used. The number of winds on both the input and output coils on each conducting bar may also vary in number and in conductive material.

[0078] The motor generator, as shown in FIG. 1, is an example of a single stator, single rotor back EMF motor and is comprised of a means of providing energy, such as input battery 10 connected to power switch 11 (shown in FIG. 2) and Hall Effect magnetic pickup switch 13. Magnetic pickup 13 interfaces with timing wheel 12 to form a timing switch. Timing wheel 12 is comprised of four magnets 14 with the South pole of each said magnet facing outward to magnetic pickup 13. Timing wheel 12 is fixed at one end of shaft 15. Located on shaft 15 is rotor 16. Rotor 16 can be of any size, said rotor containing four rotor magnets 17. Said rotor magnets 17 are arranged in a manner so all have the same polarity. Opposite timing wheel 12 on shaft 15 is a means for work, such as a power take-off 18. Rotor 16 is mounted in a fixed position with rotor magnets 17 in apposition with magnetized pole pieces 19a and 19b. Each pole piece 19a and 19b is connected to iron bars 20a and 20b. Iron bars 20a and 20b are connected by a permanent magnet 21. A means for conduction is wrapped around iron bars 20a and 20b to form input coils 22a and 22b. Superimposed upon input coils 22a and 22b are output coils 23a and 23b. Output coils 23a and 23b are connected to full wave bridge first recovery rectifier 24a. First rectifier 24a is connected to battery 10.

[0079] FIG. 2 is a schematic diagram of the motor generator circuitry showing input coil connections from input battery 10 through power switch 11, transistors 30a,b, resistors 31a-d, through power supply lead 32 (VCC+) and to magnetic pickup 13. Magnetic pickup 13 is in apposition with timing wheel magnets 14 located on timing wheel 12. Off of magnetic pickup 13 is collector lead 33 and ground lead 34. When current is reversed, it flows through resistor 31e and transistor 30c to input battery 10. Input coils 22a,b send power to full wave bridge first recovery rectifier 24a which then sends power through switch recovery 27 back into the system, and/or to input battery 10. Output coils 23a and 23b send power through single diode second recovery rectifier 24b to recovery battery 25. In this particular embodiment, the value and type number of the components are as follows: Hall Effect magnetic pickup switch 13 is a No. 3020; transistor 30a is a No. 2N-2955; transistor 30b is a No. MPS-8599; and transistor 30c is a No. 2N-3055; resistors 31a and b are 470 ohms resistors; resistor 31b is a 2.2K ohms resistor; resistor 31c is a 220 ohms resistor; resistor 31d is a 1K ohms resistor; and recovery rectifier 24a is a 10 Amp, 400 volts bridge rectifier.

[0080] FIG. 3 is a box diagram showing the flow of voltage from input battery A, through recovery circuit B, switching circuit C and motor coils D. Motor coils D send available back EMF energy through recovery circuit B, and from B to recovery battery E and input battery A. Available back EMF energy can also flow from switching circuit C to recovery circuit B.

[0081] In multiple stator/rotor systems, each individual stator may be energized one at a time or all of the stators may be energized simultaneously. Any number of stators and rotors may be incorporated into the design of such multiple stator/rotor motor generator combinations. However, while there may be several stators per rotor, there can only be one rotor for a single stator. The number of stators and rotors that would comprise a particular motor generator is dependent upon the amount of power required in the form of watts. The desired size and horse power of the motor determines whether the stators will be in parallel or fired sequentially by the magnetic Hall Effect pickup switch or switches. The number of magnets incorporated into a particular rotor is dependent upon the size of the rotor and power required of the motor generator. In a multiple stator/rotor motor generator, the timing wheel may have one or more magnets, but must have one magnet Hall Effect pickup switch for each stator if the stators are not arranged in parallel. The back EMF energy is made available through the reversing of the polarity of the magnetized pole pieces thus collapsing the field around the coils and reversing the flow of energy to the recovery diodes, which is capturing the back EMF.

[0082] Individual motors may be connected in sequence with each motor having various combinations of stators and rotors or in parallel. Each rotor may have any number of rotor magnets ranging from a minimum of 2 to maximum of 60. The number of stators for an individual motor may range from 1 to 60 with the number of conducting bars ranging from 2 to 120.

[0083] What distinguishes this motor generator from all others in the art is the presence of a permanent magnet connecting the two conducting bars which transfer magnetic energy through the pole pieces to the rotor, thereby attracting the rotor between the pole pieces. With the rotor attracted in between the two pole pieces, the coils switch the polarity of the magnetic field of the pole pieces so that the rotor is repelled out. Therefore there is no current and voltage being used to attract the rotor. The only current being used is the repulsion of the rotor between the two conductive bar pole pieces thereby requiring only a small amount of current to repel the rotor. This is known as a regauging system and allows the capturing of available back EMF energy for use. Finally, although the invention has been described with reference of particular means, materials and embodiments, it is to be understood that the invention is not limited to the particulars disclosed and extends to all equivalents within the scope of the claims.

5.0.1.5. Bedini Comments

Only some Info in respect to the reports they where coming in:

From: **John34** *Date:* Fri, 12 Nov 2004 19:07:08 Peter, It may be a little premature for me to say this but so far I have noticed that my useless batteries are charging faster than the first battery is discharging. These batteries would not take a charge to the point they are now. I have not done a load test as they are still charging. It may be slow (it increased when I replaced the four magnet rotor with the 6) but there is clearly something unusual happening with this circuit. There is no way that motor could run so long and not discharge. I could understand the first battery powering the spinning and then running out. But how could it also charge the two batteries at once? Here we have power necessary to move the wheel (I don't see how there could be any more power to charge the other batteries beyond this with regular electricity). Then we have one battery charging faster than the discharge of the first. And then another battery is also charging slightly faster than the same discharge.

So I have seen several very interesting things so far. And if the above continues to be true, and if useless batteries are recovered, and possibly improved, then we have something very remarkable. Time will tell, and is telling, that more energy is coming out than going in. I wonder what would happen if I had good batteries hooked up? There may be something with my CD setup that works better than others because the bearing allows for faster spinning. I think if we reduce friction and wobble and air flow resistance then we will see a more noticeable result. I do believe that the objects of this project are accomplished. I am wondering if it is worthwhile to attempt to add several coils to my latest unit to increase the charge (as I read somewhere it was possible, and as I have seen pictures on this group http://photos.groups.yahoo.com/group/Bedini_SG/lst

Are these pictures with the same circuit and coils? Or did they use an improved circuit? (And is Burts "Improved Bedini Circuit" really that?) I have finished making another coil and circuit and was attempting to hook it up to my latest bike wheel when, after a few minutes of adjustments, I hit the magnets and knocked three off. Before that happened I noticed increased speed and less wobble and a faster volts charge (I have not been measuring amps yet). I hooked both circuits up to the same two batteries as I had no other batteries to use. When the magnets came off I decided to rip the others off and place them in a position to allow for 16 to fit. I am about to start that up soon. How should I wire these? Should I use the same battery to power both circuits? And should I use the same other battery to receive charge from both? or should I add one or two more batteries to them? I ran out of wire to make any more coils but I could use the other coil and circuit to have three on this system.
Are the improvements that can be made to this charger just a matter of adding minor components like capacitors (as it appears from John's web site), or is it a much more involved production? I watched carefully both of your videos and it would be far beyond me to reproduce anything like you explained there, unless it was made easy enough as with this project. If someone would show me what parts to buy and how to hook everything up, I would be very interested in doing that.

I suppose that one reason for taking time before rushing on to a system that puts out more charge, beyond wanting everyone to really understand what is going on, is that higher output comes with a risk of more danger. If people do not understand what is taking place, and are adjusting it, then a more powerful unit may be dangerous if one does not know what they are doing.

Looking forward to the next steps. Thank you, Rick Sterling,
Your conclusions in this post are on the right track. The purpose of this project is to demonstrate a motor with an energy recovery system. You have succeeded in building the system correctly. The only relevant questions are:

1) Does the second battery charge as the first battery goes down?

2) Does the second battery charge faster than the metered current suggests it should?

3) Does the unmeterable portion of what is charging the second battery ALMOST make up for the losses in the system? If your test data suggests that the answer to these questions is "yes", then you have succeeded with the project. That is all this "school girl motor" was ever meant to

do, and all we ever said it would do. As far as we can tell, your very first test data showed all the necessary truths. Do you know of any other system that does this well or better? If someone out there is reading this, and knows of a better system, then please bring it forward. A number of people who have been working with this system quietly, are beginning to see the performance enhancements that appear in the battery. That is where we said it would show up. There is NO meter able OU coming out of the machine. I hope this helps people stay focussed on what is real and possible with this project.
Peter Lindemann

What Charges The Batteries --- John

From: **John34** *Date:* Thu, 11 Nov 2004 21:38:23

The Question was asked on the SG group. My answer:

Yes I have done this experiment, buy doing this you invoke the 'lamellar' currents" rule, this is from Kron not me. This means that you break up the currents into branches. Each 'lamellar' scalar current" is additive to equal the sum of the total. The Heaviside current surrounds the wire, this is almost like reactive power, the digital meter has a very hard time reading this. The system is a "Unity System", what you put in you get out, but you are loosing a lot with clip leads and bad wiring. If you want to see what is charging your batteries you need a scope. The output wire positive is run through the centre of a solenoid coil of many turns this will couple at 90 degrees with the Heaviside current. What you will see is a ringing wave that is charging the battery, it is not electricity in a true form it is pieces of electricity.

What is this current? It is made up of mostly scalars this couples in the batteries when it meets the next scalar that it can couple with, this is what charges your batteries. You wanted to know so here it is. The next part of the system is more mysterious, I will save this for a later time. I did show Susan today what this wave looks like. The idea here is to charge the secondary batteries as fast as possible from one primary battery. The faster the charge, the more power you can use. This means speed with the motor/energizer. The energizer is a open loop system so it can expand this type of wave. You must have this type of wave with a Radiant type systems, just look at a Tesla Coil output you will see it, in many ringing waves. It takes Quaternion math to see this, along with the magnetic fields of the Motor/energizer.
John Bedini

My answer to them all on that group --- John Bedini

From: John34; *Date:* Thu, 21 Oct 2004 19:14:28

To all, I just want to keep the story straight so here is what I said.
John
Koen, Horace, etc,
To all in question, this is why I will not supply Stefan any charts, waveforms, etc... It is simply not true, as I have been posting this information for years on my Internet site. All one must do is LOOK. If I read the answers from Stefan carefully, it looks like he is unwilling to devote his attention to anything I have said to him. I have answered his questions with complete honesty

at every turn. I told Stefan that we use a very special meter to determine the charge in the secondary battery. That meter is called a BK Precision Battery Capacity Analyzer, Model 600. What is so hard to understand about this and what more proof do you need that the battery is REALLY CHARGED, knowing the meter reads the battery's capacity in amp-hours? The second thing here is this. The circuit is right in front of your eyes. This circuit does unexpected things. You can only discover these things by building one and testing it on your own lab bench. No amount of "thinking about it" will penetrate the mysteries. Coming to criticize me over Stefan's problem is not the answer here, because it goes much deeper then this. Stefan has a vast lack of knowledge in this field, and apparently, so do you. The ONLY way for you to remedy this, is to build the device and study what it does. This is what I have done for 35 years!
I have stated plainly that I want nothing to do with Newman or his theory or his test results, and the machine is not over unity in any way. How many times must I say this?

I will say this in plain English again for you both. Go through My pages. You will see pictures of the wave-forms. You will see every machine I have ever experimented with, including the "bucking field" generator. You will see everything I talk about. I do not just sit here and draw diagrams that do not work. I test everything. I do original work, and patent it. When I "duplicate" someone else's device, I report it and give credit to the inventor, like my "Adams" replication. I don't obscure other people's work, like Stefan's goofy "Easy Meg", which has no technical similarities to the monumental work of Tom Bearden.

I did not give Sterling bogus information when he arrived here to see if my devices were real. I sat right here and let his engineer watch batteries charging, hooked up to the scope so he could see the wave-forms. I sat right here and showed him how the circuits work. I sat right here and explained everything I could within reason. But this company has millions of dollars worth of stockholders. Sterling and his group signed "Non-Disclosure Agreements" before the demonstrations. I gave Sterling permission to start his public replication project for the "School Girl Motor." The idea that I have some nebulous obligation to disclose everything about this technology on the Internet is pure fantasy. When I DO give you "step one" on the path to this discovery, you refuse to take it. This proves you are not even ready to take "step two", much less a complete disclosure. The fact is, you wouldn't understand what I am doing now, anyway. So why disclose it?

I have posted the Kron work on my pages, along with the wave-form pictures. You obviously don't know what it all means.

These systems do NOT capture "back EMF". Back EMF is not capturable. My patents say that my motor captures Back EMF because THAT is the only claim the Patent Office would accept. In reality, Back EMF is a term in electrical science that refers to the effect that reduces the current draw in a traction motor as the motor speeds up and generates a counter voltage that opposes the applied current. THAT is "back EMF." My systems do NOT use this process.
Koen, you are correct when you say that I am quoting Tesla correctly. But it goes much deeper than that. I actually understand what Tesla was saying and my systems tap the same Radiant Energy that Tesla discovered. Stefan is clueless as to how this works, and has never listened to my suggestions about how this works.
There is NO free electricity produced in these systems, or any other system that I know of. I have stated this repeatedly. The only thing these systems produce are a series of "high voltage

spikes" that have no current associated with them. Voltage without current is the nature of Radiant Energy. This is what Tesla said. I call this "reactive power" because it does not represent voltage and current simultaneously, that could be measured as WATTS. This Radiant Reactive power WILL charge batteries, light light-bulbs and other things but it DOES NOT meter as REAL POWER. This is why your math is useless! So please, quit quoting your theories and analyses to me. My light-bulbs are on. Are yours? You are welcome to believe in your theory, but I KNOW that Tesla was right about the nature of electricity, and how to successfully tap its useful fractions. If you would just build the motor the way I have said, you could begin to learn about this too.

Beyond this, I am done CHATTING with you. Leave the people alone who are trying to learn this. Your ignorant comments are of no use. That's as nice as I can be about it.

John Bedini
X123 Sends Message --- John34

From: **John34** *Date:* Sat, 9 Oct 2004 18:58:17

Jerry, John,
Sorry can't seem to append to the thread, however, I believe something to consider is the recent work by NASA and others in the study of lighting. At a conference in 1999 I remember seeing data showing there is a constant return current flowing from all over the earth back into the sky resulting from lightning strikes hitting the earth. This current is very, very, small --- around 10-12 amps per square meter and varies slightly depending on temperature and wind conditions. The measured potential was 100 volts per meter as I remember, however, the high resistance of air normally masks us from any felt effects. An example was given saying one of the basketball players has about a 200 volt potential at the top of his head. I would think a 300' conductive antenna transmission line would make a really big difference. Also, a vertical arrangement would make more sense than a horizontal one.

To All,
Lets make this much simpler then it is, and no one will get hurt doing the experiment. Just put up your 200 ft of coax 40 feet high supported between two fibre glass poles, this should give 1000 volts potential charge. Next take an SCR 800 volts, leave the high voltage capacitor where it is connected, now face the SCR cathode towards the positive pole of the battery and ground the negative side of the battery with an 8 ft ground. Connect a neon bulb between the anode and the gate, at 90 volts the neon will fire and the battery will get a "real radiant charge" (Conversion is backwards from electrostatic to radiant should see saw tooth wave, much stronger). The faster you fire this bulb the better the battery will charge. It's important to leave the .00047 uf 5000 volt capacitor between the cable or connected to the anode and ground, it's important to use a capacitor something like mica or a glass tinfoil capacitor. If looking at it with a scope be careful just look between anode and cathode. Please be very careful with this experiment.
John Bedini

Radiant System --- John Bedini

From: **John34** *Date:* Thu, 7 Oct 2004 18:45:25

Ken, It looks like to me that your really getting into Tesla's work, What if, Tesla was dead wrong and all the power we are calling Longitudinal is not that at all. What if I said to you that Radiant energy when transformed is longitudinal and all information can be contained in that wave, and that the next transformation process is nothing more then reactive power?.... Then what if Emmett, in what he told you turns out to be after the transformation process total reactive power looking like a square wave, or more like a PWM wave at very low frequency and that reactive power can charge your storage battery. The next question is what if your cookbook math does not fit the transformation process that takes place, would you add numbers to make the equation balance? What if I told you that the engineers do not understand what a magnetic field is when it is used in the transformation process between radiant and reactive power. I do understand that you must use the math, and I'm not asking for any math here in your answers, simple terms on how you see all this, so those that are having a hard time following us can understand what we are talking about. It could be that we are all saying the same thing which just boil's down to charge in the end and how we get it. I also understand that you do electromagnetic engineering so you have seen many different things in your work. One more thing, if the process starts at the Radiant level and then proceeds to longitudinal and then moves to reactive and then to a square wave and from that point moves to the sing wave in the end would you agree with this?. That these are the transformations we must go through? I have a reason for asking these questions when I start to add something different to this equation, but I'm going to keep this on a simple level as much as I can. Also this is not any kind of contest in any way to see who knows what, but I want to get down to the basics of a full functioning radiant system that anybody can build with junk parts. I have found that most people do not understand the basics in electronics and want to keep it very simple. As I have stated before I will not use the terms Free Energy or Over Unity because I see none anywhere, even Tesla was going to use the generators to power his reactive power system tuned to certain frequency in a high Q pickup like you said in your post, no free energy here, just a nice transmission of power free for the taking, so Morgan said your not milking my cow for free. By the way, this system is already in use.John34

Radiant Motor --- John34
From: **John34** *Date:* Tue, 5 Oct 2004 21:03:34
To All, Roamer, Brett, Ken, Etc.
To answer Roamer, that's right, that's all it takes to do this, its just the basic system.
Brett, You have had this so many times, but your just trying to do this so fast. your answer, It is in the upward spike that contains the Radiant energy, would you like a test tube, or are you going to fly on one of those airplanes for a visit? Expanding this system, Take 100 ft of coax cable RG59U and do the same hook-up you will be surprised, watch the frequency it will be high. It will have uniform capacitance and low inductance, just like Tesla said. The problem in coil design, is the current through the coil, the more the magnetic field the more the heat. That means the bigger the coil is the more the waste the lower the frequency, so why do we need Iron in the system at all? This is the problem that Tesla faced at high frequency with iron, Pulsed Radiant Discharge was the answer and no iron. EV Gray had the same problem in his motor, his test stand was an iron-less coil to blow off the magnets under Pulse Radiant Discharge. The answer to the problem was a very sharp spike on the leading edge. This does not take rocket science to get the job done, and then a few little light bulbs for all to read by.

Ken, If I could just find a power supply to bake people, what a great device. only kidding. But these devices have been known since the early 60's, but as time will tell its just to be used for mass sheep control in some sinister way, you'll see, hope you got your graphite shields up. Just a comment sent to me from another researcher, talking about the motor: "The electrons in the coil just get slapped and squeezed by the pulse. The pulse is so strong and the resistance high that a choking effect occurs. But the voltage is highly elevated in the coil from this effect. I think...the radiant energy must happen during coil brake down, between pulses. I cant see it on my meters. All I know, it is very, very powerful. I just don't understand why this is not being used. Surely other folks have built these designs. I use mine everyday."

John34
Bedini pages updated again, an answer --- John34
From: John34 Date: Fri, 1 Oct 2004 21:03:40

Ken, I want to try to answer you but I do not know where to start. I guess we must start at the basics of my work 35 years ago. As a new engineer out of school, I had the opportunity to work in the semiconductor field, while working in this field I had seen many strange things that semiconductors do, so a little background. I think what I'm trying to explain to everybody is that I have changed my attitude on what is termed "free energy" and "over unity". It's not that I do not agree that there is no free energy, because there is, windmill, solar panels, water power, it just takes money to get there. What I have found out is that the energy machines that produce this Radiant Reactive Power are strange indeed, let's take an example, the G-Field generator. Looking at this machine indicates as if more power is being consumed then is coming out of the machine. When the waveforms are looked at, the power being produced is "Reactive" and of no use as real power goes, but it does light lights and it speeds up under load, when built right. The next thing is that when the machine is hooked to a storage battery it charges the hell out of that battery and speeds up even faster so the input power goes way down. This is the same thing I have noticed with the Mono-Pole motor, I have studied these wave forms until I could not see straight and all the time my mind refusing to see the truth about what it was I was looking at. I noticed that it charged capacitors very good and charged batteries and the power was really there except my meters could not measure it. This led me into studies of the coil that I was winding for these machines. Even if I had the machine working I still was not convinced something was charging the batteries I could not measure, it was not until about 15 years later I knew that I had to do something to find out what it was, just at that time Peter Lindemann's book, The Free Energy Secrets of Cold Electricity, so I bought three books and called Peter or Peter call me I can't remember, but so what. Any way Peter and I joined forces to explore what it really was that these machine were doing. So after working with Peter and building every possible machine, these are My conclusions, There is no "Free energy", there is no "Over Unity" in any of these machines that can be measured with normal scopes and meters and we are just all assuming uncles Joe's theory to be right. When I put up the new pages I did not want to debate anybody about what I posted. I only wanted to try to explain what I found to be the proof of what everybody is calling Free Energy/ Over Unity, as it turns out to be "Radiant Reactive Power", so term it as you will, di/dt or whatever it is all the same in the end. If the machine can produce this Radiant spike before the switch turns on and the spike is reactive and if it tapped off at the right time and sent to the battery in the proper polarity, it will charge your battery. I'm not going to by into all these theories about unproven experiments unless the experiment is done in front of me, as I have posted enough experiments to show everyone what it is.

One step further on this is that, I know some of the people did try to build my motor's and did not get the results expected, but I can say that enough people have been to my shop to see the proof of what I say I have built and have watched these motors and solid state devices charging batteries. So I'm saying that the power you seek is "Radiant Reactive Electricity", and it takes an input to get it in some amount, that is all there is in these machines and strange devices. The riddle has been solved in my book.
John Bedini

An Answer to a question John 34
From: **John34** *Date:* Fri, 10 Sep 2004 21:47:16

Michael, If we start here in the paragraph below by Kron, we can see why this motor must recharge the battery.

Kron, Gabriel. "...the missing concept of "open-paths" (the dual of "closed-paths") was discovered, in which currents could be made to flow in branches that lie between any set of two nodes. (Previously & #8212; following Maxwell --- engineers tied all of their open-paths to a single datum-point, the 'ground'); That discovery of open-paths established a second rectangular transformation matrix... which created 'lamellar' currents..."... "A network with the simultaneous presence of both closed and open paths was the answer to the author's years-long search."

So what is it that Kron is talking about, What is very common to this in nature, and what took so long for Kron to find out. Here is how I see it, Kron is talking about branch currents. Nature has many branch currents but we do not talk about them in electrical terms. Example, a river cannot flow if the little streams (branch currents) are not feeding it. A tree can not have a trunk if it had no branches. Nature has given us all the examples, but we must make use of the meaning as we see it before there can be any invention, and then it must follow all physical laws in that universe. For example what is the word " lamellar" mean, it means the stacking of plates , wires and so on, in a battery the number of plates give rise to many branch currents that make up one high current output in the end result. Flowing between the plates are "lamellar" currents provided by the chemical reaction, only at the speed which nature works best at, this does not mean that the battery needs massive currents to charge it, it's quit the opposite. What is it that the meters read when we measure something, simple wasted energy that has just been dissipated out of that system. You can only measure that and nothing more, so the only thing that you can measure is the primary circuit, because this is the closed loop in this system. Kron goes on to say that currents were made to flow in branch currents between nodes in the primary circuit, so what is wrong with the coil in this motor, what is missing, and how could it be changed to act like the river?, you already have the second node away from the primary circuit to the battery that will collect it. The meter can not measure the longitudinal wave from these currents to the second battery, for these currents are radiant in nature and can only be translated by the chemical reaction in that second battery, this process does not boil the battery so there is no water loss, for if you loose the water in that battery you will have no electricity at all. But you can use your volt meter to see the charge on that secondary battery. We never got anything but a volt meter after all these years did we. More later on this subject.
John Bedini

From: **William Alek**; Date: Sat, 4 Aug 2001
I've been looking over Mr. Bedini's patent, WO 01/52390 A1

No where in the patent am I seeing claims of over-unity? What I am seeing is the "possibility of over-unity" suggested there in (page 5, line 13), but NOT actual or real over-unity produced by his device! Now, Mr. Bedini does mention (page 12, line 4), "... the motor to produce an energy level of COP = 0.98, more or less, depending upon configuration, circuitry, switching elements and the number and size of stators, rotors and coils that comprise the motor." includes ONLY the electrical and electronic components, however, does NOT mention or include the efficiency, or inefficiency of charging the battery. Battery charge inefficiencies would most certainly lower his overall COP value!

I would think that his systems (including motor, rotor, and batteries) would have an overall efficiency of around 85%, or COP = 0.85. This isn't too bad for modern systems, however, this is a long way from being a "self-runner", which of course is the ultimate goal.

William S. Alek INTALEK, INC. 3506-43rd. Place Highland, IN 46322-3129 USA HOME PAGE: <http://www.intalek.com/
Advanced Bedini Motor/Energizer

From: **Harlan Sanders** *Date:* Fri, 3 Dec 2004
Hello All,
Just wanted to let everyone know my experience with an ADVANCED version of the Bedini Schoolgirl motor/energizer. John gave me a schematic a few weeks ago of a device that he said would put the issue of radiant energy battery charging to rest.
Having built several other versions of his devices successfully, I was very excited to receive the schematic. I built the device EXACTLY as John said with ABSOLUTELY NO CHANGES!
The first spin the device spun up to around 800 rpm's on a 22" bicycle wheel; and that's fairly fast. The device achieved resonance and the current drain dropped by about 20%, maintaining the rotation speed, and even got a bit faster.
The input battery was a 12v, 1.2aH battery, and as John suggested, I put 4 on the output side. Within a few minutes, the batteries began to rise in voltage. There has been some big debate for awhile about this "radiant charge" producing only a surface charge on the batteries. Well my friends, this is NO SURFACE CHARGE.
The charge was held for 30 minutes at rest, and when I tested the batteries with the Computerized Battery Analyzer by West Mountain Radio, the batteries produced a steady drain for an extended period, after being previously dead, with readings as low as 8 volts per gel cell. They were NOT charged prior to the test with a conventional charger!!! They were completely dead.
In a conversation with John, we were discussing the issue of larger batteries. I told John that I had 2 garden tractor batteries that were completely sulphated and would NOT take a charge at all with a conventional charger.
Tested with the CBA, the batteries produced 1 amp for less than 1 second. I tried charging the batteries 4 different times with a regular automotive battery charger, first on the 6 amp rate for 6 hours, and then overnight on the 2 amp rate. I tried this 4 separate times with no luck. The voltage of the batteries would rise to 14 volts but the current was not even 1 amp when loaded, and then the voltage would drop to 8 or 9 volts under load immediately.

Then John advised that I attach 2 diodes to the output of the newest advanced device that I had built. That would give me 2 isolated branches to charge with. So, I did exactly that. He said to put a steady power supply on the input so as to produce steady input for an extended time, and simply walk away from the machine and the batteries.

The following evening, I stopped the Advanced Energizer Circuit. I removed the recovery batteries. Now, listen closely! The 2 garden batteries that were completely useless and would have otherwise been thrown away are now producing as much as 7 amps of current for several minutes at a time before being discharged to 11.4 volts.

Now, one secret to the Bedini process is the cycling of the batteries in the device. Each cycle, the batteries become less and less sulphated. I am compiling tests of each battery that I use in the device for increases in usefulness. Having proven the smaller devices last year, I am now proving the usefulness of the larger and more advanced Bedini circuitry.

It seems that John has been right all along, and nobody has been listening or following his directions. I have seen engineers argue the Ohms law, and all of that other taught discipline in electrical theory. When these people forget the conventional way of thinking and just do the experiments and quit listening to incompetent people who fail, then there will be more advanced devices that will provide useful power to, otherwise helpless people. You will NOT measure a 1 amp drain in the circuits with a 4 amp output!!! I REPEAT, the circuits do NOT indicate with conventional meters any gain!!! But the batteries become fully charged!!! When all of you forget meters to show this energy, you will see in the load tests that the energy has charged the batteries. It is provided as extra watts in the load tests. That's where you will see it. Perhaps some of you have been looking at this energy all along, but did not know what to look for. Or perhaps, some have been just following the words of a few unsuccessful people who could not walk and chew bubblegum at the same time. If I can do it, ANYONE CAN!!!
I have PROVEN 100%; and I have the analyzer load tests, that these batteries were useless. And now they are resurrected to a useful level. And that increases with each charge and discharge in the unit. Now, if the battery will supply one amp of current for a period of time, perhaps into the hours, then these batteries have been saved, at least enough to charge more batteries with the machine. The way I see it, $50 worth of wire and transistors, scrap PVC for a frame, and some Radio Shack magnets and a scrap bicycle wheel , has begun recovering $50 worth of batteries within 24 hrs.

I have posted some picks of the new, advanced device on www.nuscam.org . I have blocked out some areas of Bedini's proprietary circuitry, until such time that he wishes to release it, then I will replace with the untouched photos. But that is his decision, not mine. The general description of the circuits are in his patents. The schematic that was provided to Sterling Allen and others is a start. Learn the technology, and how it works, then perhaps the more advanced circuits will be available in the future.
Best regards, Harlan Sanders

Another Bedini Device that "Works"
From: DMBoss1021 *Date:* Wed, 31 May 2000 08:13:39

Hi folks:

This is a prelim report that another Bedini devise has been replicated by two of us, and not only works, but after we built it to his specs, and gained a basic understanding of why/how it may work, could then predict changes to the design which improved it's functioning.
It is, in my opinion, imperative to follow his construction details closely, for first replication. This is necessary, as I believe he has an intuitive, or objective grasp of some advanced concepts, or properties of the interaction of magnetic fields, and oscillating ones, and how they interact with reality, and or - space-time; the ZPE; or the aether depending on what you call it.
And yes, at times his details are difficult to comprehend. But it is not his task to give a basic course in electronics, or static/dynamic magnetic. Also some concepts of correct functioning of certain devices may run counter to what we have been led to believe by conventional theory - so even if something he specifies doesn't make sense - try it first, then after it works, figure out why.

That said, the device / effect we have replicated is found here:
http://www.amasci.com/freenrg/bedini.txt

I built it exactly as shown, as I have these size magnets (RS does not sell these large ones anymore, but they are available elsewhere)
I had a suspicion, from the comments about this pencil thin "scalar beam" or effect, that this may be the same or similar to what is described on my site as the "Primary Energy".
Once built, and the motor turned on, there is indeed a "beam" of energy emitted from the sides where the magnet faces oppose each other (bucking). This beam was exactly the same as the Primary Energy (PE) beams that can be made with a container of inert gas, and a magnetic field.
In the case of just the running device, in open air, emitting a beam, I surmised that this field arrangement and modulation was exciting the argon atoms in the air (Ar is 1% of air) - so to see if this is the case, I placed a tube of another inert gas, at this location (the place where the "beam" comes out of the magnet interface) - and a VERY powerful PE beam was created --- much more powerful than if the tube is simply placed against the magnets, without the modulation.
And in addition, with the addition of a 25 ohm, wire wound rheostat in the circuit, to vary the motor's speed, (and hence the FREQ of the pulse signal, thru the coil), the PE beam strength, varies as the FREQ is varied, and there are several resonant "nodes" where a small FREQ range, makes a much large beam effect, as this FREQ range is passed, while changing the speed. There are several of these resonant points.

This has been replicated many times, by myself, now, and by another, using a different magnet size/shape, with similar results.

Both of us independently have found that our current crude, "measurement" of an anomalous quality which seems to be related to this energy (and not thermal, or EM sources) is affected in the same way, by these "scalar" beams, augmented with a xenon flashtube. (not flashed) (this objective measurement, is separate from the subtle sensing of "feeling" of the PE, and will be detailed later, as we get a better handle on it)

I am working on a write up for a post to my web site - in next few days, with all the details.

The magnetic field analysis, using Quick Field, shows that this arrangement of permanent magnets, with the modulator coil is making the same field shape, and relative flux density gradients, as that of the "Magnetic Beam Amplifier" shown on my site, and detailed in US patent # 5,929,732.

In this case, it is a "dual beamer" as opposed to the "quad beamer" shown on the patent, and the "hex beamer" shown on my site. The two bucking or opposing magnets, are like the radial "focusing" plane, described in the patent, and the modulating coil forms the field of the axial magnet - and this axial field is pulsed, or alternated (if any back EMF's from the motor, cause complex AC harmonics in the modulation).

In the "beamer" field configuration - there is found a "null" zone where the bucking fields intersect, or "collide" as Bedini describes it. And with the modulation, this null zone then is caused to move front and back, along the same axis as the coil. And the overall beamer field shape is also caused to move back and forth, and if AC is present, will flip or mirror on each oscillation. (our theory is this a severe "aether stretch", and forms a resonant cavity for the PE)
There is also similar reports of bio effects, which are reported from this device's "beam" or field, and by the PE.

And notice that this device also used a set of bucking magnetic fields, with a modulation injected. And this patent's author describes the interface between the bucking magnetic fields as like a "window" to a higher dimension.
One more note on the Bedini "scalar field, or beam" device: --- I noticed in the field analysis that the field strengths of the coil, and magnets were greatly mismatched - and surmised that if this "beamer field shape" was responsible for the effect, in some measure, that increasing the current to the coil should then make it perform better. (better matching of magnetic field strengths)
So I did a test with applying a mechanical load to the motor shaft (and measured the current) - the current could be increased 5 fold this way, and the resulting beam was greatly increased in intensity, and followed the current level in a proportional manner.

Also, I noticed that while applying this load to the motor, by hand, that a PE emanation was present at the motor housing, and shaft! So I believe there is some kind of subtle "current" at work here, and some feedback, and resonance within the electrical conductors may occur, (the PE can be "carried" on a good conductor, as shown in other experiments). So this crude modulation method, may in fact be a critical factor to achieving this!

An armature type permanent magnet motor, has permanent magnets as the stators, and a rotating armature, of coils - that are sequentially energized by the action of the brushes on the armature. This creates a sparking effect at the brush/armature connection (and in this case, a spark, was observed, indicating a plasma present) - and air is also present. So (possibly) another PE emanation is being created in the motor as well as it functioning as the pulse generator!
And this may be indicative as to why some older methods to make certain effects work, while newer, "modern" methods do not. (when you use the sparks gaps, and electro - magnetic - mechanical systems - the effect is not necessarily the same as a "solid state" method!

I believe Bearden commented on this - that many times a jury rigged device has stumbled upon a method, material, impurity, or configuration, which is the key to an effect, but more modern, clean, or pure methods may not have the right elements to accomplish this.

A note of caution - any who are following the PE, and experimenting with it --- this beam method is VERY powerful, and may pose some dangers to body exposure. This is evidenced by my feeling the strong tingling, in the sense hand, turning into a strong numbness in the hand and arm, which then lasted for over an hour after each exposure! This numbness felt like the effect of using a "hammer drill" to drill many successive holes in concrete - the strong mechanical vibrations making the arms/hands feel numb for a time after this work.

As stated, I am working on the drawings, a field analyses, and writing up this info, and will inform when this is done.
The Primary Energy site: http://hometown.aol.com/dmboss1021/NEWPH/Index.html
Sincerely, DMBoss102
From: Jerry Decker - KN Date: Sat, 27 Nov 2004 17:53:31
Hola Folks!
Not exactly sure what happened, but Emmett sent the following which did not make it to the list or archive, so I'm reposting.I think the problem was the photos he mentions since this list doesn't accept attachments as per the guidelines page at;http://www.keelynet.com/discuss.htm

So Emmett, if you'll send me the photos, I'll put them up on a webpage with your comments and a link to your email for private correspondence;

Good Afternoon All,
There are some different ways to do this, some simple, and a little energy - some abit, how shall I say more complex, but unbelievable amounts of energy, I know, been there and have done it.

HERE IS A SIMPLE WAY TO ACHIEVE THIS!
BUT FIRST; As I always give credit where credit is due, First and foremost to John Bedini for his motor/energizers, Tom Bearden for the math and help in seeing what isn't always obvious, on his website, to my friend, Stan Mayer, for thoughts, encouragement and how to do things with what few electronic parts are available in my area, i.e. radio shack, and to all the greats before me, Maxwell, Faraday, Stubblefield and especially Tesla

NOW ON TO BUSINESS: I will provide a brief description and as you all can see there are photos, and if any are in my area or want to come to my shop, I will be glad to let you see, tinker and photograph to your hearts desire, on this project anyway.

1). We will start with Johns school girl energizer(simplified) first. There are many of you out there that I know of that have achieved minor o.u. in the .01-.1-.2 volt range for periods of time, there are those of you who have achieved a 1-1 unity, i.e., trading the same voltage back and forth between batteries over time and the voltage does not go up or down although in practical situations(not this) it would normally go down over time due to resistance in the wires, resistance in the bearings, air resistance of the rotor rotating, and general quality of workmanship,there are those of you who are close to 1-1 unity but are only losing .1-.3 volts over a 24 hr. period, that is good too, but not good enough but not to worry.I have included in the pictures, photo1, of my sg energizer, "the black widow" so you can see all the wires and circuitry etc. nothing hidden, nothing magical. Photo #2). rear view with a small coil with a screw thru the centre attached to a copper/PVC pipe stand, the leads are attached to a home-made 4-diode, simple full wave bridge rectifier, (4)in4003 diodes, or a stand alone manufactured one will work also with a cap. connected across to smooth out the spikes.I originally used a reed switch but they have a tendency to burn shut and last only so long, so I asked my buddy, Stan Mayer, what I could substitute, thanks Stan.

Yes I know the pictures are dark, using an old Polaroid instamatic, flash burnt out, but wanted pictures, NOW, you will notice that the leads from the fullwbrid.rec. are connected to a DVM and it reads 6.13 volts.

Now this little coil is made from a screw about an inch long and 3/16" in dia. wrapped with radio shack 28g wire about 200' worth. This is far in excess of those who are losing .1-.13 volts every 24 hrs or so O.U. IN MY BOOK...BUT IT GETS BETTER.
Photo # 3). is just a side view.

Photo #4). now some of you have found that you don't need your wheel to rotate at all, that by just stacking your magnets on top and a few adjustments it becomes a resonate circuit and some of you are finding that it is still charging your batteries, both input and output at the same time, this is more than possible. Stan explained how the electronics do indeed do this thru a little window in time(pun intended).

Picture #4 is mine doing just that BUT IT GETS EVEN BETTER!

NOT ONLY DO YOU NOT NEED A ROTOR ROTATING, YOU DON'T NEED MAGNETS TO MAKE IT RESONATE, JUST ANOTHER COIL,

photo #5, show my coil sitting on top, it is smaller than the main coil, so needed to get it closer, although sidfe by side it will still provide a voltage, just not as big, now!! 1, if you make your coils larger, the same size and attach the circuit I described above, you not only achieve O.U. in charging the two batteries, but you can run extra voltage even above, the DVM reads 2.579 volts in case u can't see it.

SO NOW YOU NOT ONLY HAVE O.U., IN ONE SYSTEM BUT A SECOND SYSTEM AND THERE IS NO MOVEMENT, POSSIBLY A SIMPLIFIED MEG WITH SIMPLIFIED STUFF, BUT I CAN'T NOT SAY FOR SURE, EITHER WAY IT IS A NON-MOVING GENERATOR THAT YOU ALL CAN BUILD EASILY IN A COUPLE OF HOURS!

I ask only one or two things, PLEASE, tell and send this to all your family, friends, other energy sights, Rense .com , papers, radio, tv, or whatever as the momentum needs to raise sharply, like the spike on a scope of radiant energy as some have seen, or this will die a very quick death and my other peripheral devices along these lines are not worth putting out and I shall go into quiet retirement.

ALSO, any who want to come to my office and shop to see, tinker, experiment, and photograph etc. are more than welcome, I have NOTHING TO HIDE. my address is Westwood/'Westside Apts. Office,1015 Oakcrest St., .Iowa City, Iowa 8-6 or so Mon.,-Fri. and about 9:30 1:00 or so on Sat.Best Regards,Emmett L. Butler www.wondermagnet.com // www.otherpower.com

Forum

When scanning this site I noticed some postings concerning Bedini motors but had no idea what they were like. When I finally found what they were I wasn't surprised by the basic idea, but I was by the claim that these things put out more power than is put in and by the controversy. It turns out that there may be a fairly easy way to determine the output power. This has to do with the energy storing properties of capacitors. The Bedini motor has an output capacitor that is charged and then discharged into a battery pack.

For a capacitor of value C farads the energy E stored in it as a function of its voltage V is E = 1/2xCxV^2. For instance, a capacitor of 1000 Microfarads with a voltage of 100 volts contains 5 joules of energy. The voltage across a capacitor then gives an unambiguous measure of its energy.

A Bedini motor when tuned turns at a constant rpm. This means that the pulses generated will be uniformly spaced in time. An oscilloscope can be used to monitor the voltage across the output capacitor. The drop in voltage when the capacitor is discharged then gives energy outputted: E = 1/2xCx(Vmax^2-Vmin^2). Multiplying this by the number of pulses per second (determined from the oscilloscope sweep) gives the total output in joules/second (watts). This method can be used for any capacitor pulse charging system.

Input power can be measured by putting a small resistor in series with the battery and measuring its waveform using the oscilloscope.

You're overlooking two other system components, the source and receiving batteries.

There is a specific relationship between the source battery and the motor, and also between the motor and the receiving battery.

The only real way to determine what's going on is to measure the REAL POWER that you can draw from the receiving battery VS the charge state of the primary. Then continue charging and repeat, over and over. This is just like what was done by the TUV testing labs on Bedini's prototype.

That's the only set of measurements that really count, in the end.

Measuring the other items you've mentioned will mostly serve to confuse due to certain anomalous behaviour in the source/motor/receiver process.

But, as always, feel free to slap on the meters.

The power going into the receiving battery has to go through the output capacitor. Determine that power and you've put a limit on the power into the receiving battery. There is no other route for energy to get into the receiving battery. Otherwise get rid of the capacitor and the wires to the battery. Let the energy flow through the ether or hyperspace or whatever. The device exists in our space and can be tested in our space. GeoM

Most electrically "educated" people have a very rigid set of preconceived notions when it comes to understanding various circuit behaviours. I can charge any kind of battery that I want, with a simple capacitor discharge system, mechanical or electronic. Still, I have met with much resistance from many "learned" people along the way, most of them INSISTING that IT WON'T WORK, in one way or another. It really doesn't matter since I'm just sharing my observations from my hobby experiments.

As for measuring the motor, I'm only telling you what I see happening, like it or not.
The relationship between the motor, the capacitor and the batteries is not as simple as you might, at first, assume.
Casting aspersions about dabbling with "hyperspace" won't answer your measurement questions.
Slapping meters and resistors all over the thing might offer some insight into HOW it works and whether or not it's tuned properly. But, the BEST and MOST EFFECTIVE way to measure the input vs. output is to run the motor and do your final empirical testing by measuring real wattage available from the receiving battery vs charge dissipation in the primary battery. That's all I'm saying.
By all means, measure everything. After all, there's no reason not to.
While you're at it, make sure you also do some mechanical loading tests in parallel with the power in/out tests. Even more interesting stuff crops up.

How much power ends up in the battery?
Just hook up a simple load (perhaps a 20 watt lamp), a precision resistor, measure the voltage drop, and time the whole thing until the battery is discharged.
Replace the battery on the motor, recharge, and repeat.
More on anomalous behaviour: http://www.amasci.com/tesla/tesceive.html
It's mighty fun to play with - at any rate at the very least I now have a pretty efficient DC motor on my desk....
Having fun,
Ted.

That link is interesting. The concept of an EM absorption field in relation to the Bedini motor is even more interesting when you consider what's on this link...
http://www.stormwise.com/striking.htm

This is steady EM power transmission via nature's own processes. Seems like it's just beggin' to be "received".

Hi Charged,
Kinda what I was thinking. I made that comment the other day about holding a small neo magnet near the motor when it's running. It almost vibrates right out of your hand - up to a foot away. That's one illustration that there's a field built around it when it's running. It will be interesting to carry on with testing...

Ted.
I took a look at the site. No violation of conservation of energy or charge or mass there. Also the author uses normal devices and their characteristics. Measurements are implied.

In my original posting I said nothing about the magneto-mechanical aspects. The "motor" may act as a "tuned" "circuit" for all I know. My concern was with the capacitor and the power output. Since form follows function, the role of the capacitor appears to be temporary storage of energy. There is no indication that it is involved in the energy conversion process. That is done by the magnetic components. Hence the method I outlined should allow relatively straightforward determination of the output power. I noticed that at least one person building these things has an oscilloscope. It would be interesting to see what he finds.

Beyond this, if these Bedini Devices really are capturing energy, it behoves us to find out what the source is. If millions of these are built, it wouldn't be nice to find out that the earth's magnetic field is collapsing or its spin rate is slowing down or its orbit is decaying. There are a lot of potential sources of energy out there. We don't want to mess up any critical balances. If it comes from the solar wind or the expansion of the universe then maybe "Who cares". If it comes from the 60 cycle power distribution system then Tesla's dream of broadcast power is realized and we get a whole new set of rules, but also possibilities.

Just because something is anomalous doesn't mean it can't be studied or measured. The people who discovered that they could cause a spark in a coil at a distance certainly had an anomalous situation. Look where it led. I reject the notion that something mysterious is happening between the output capacitor and the batteries. GeoM

It's interesting stuff....
and lots of it's a bit over my head. But to me, it seems very simple. If any of these systems (Bedini Motors etc) are actually "capturing" some mysterious outside form of energy... then why is it that we have yet to see a motor that "runs" by itself? I realize there are LOTS of folks who make the claim that this has been done.... I remain highly sceptical till I see it with my own eyes though.
On a different note... Often when I see claims of over-unity type motors and that "sort of thing" I jump to the pre-judgment that whoever is making the claims is either a con artist, or... doesn't know what they're talking about. I looked a bit into Bedini's WebPages and career... and being a "vintage hi-fi" enthusiast, I was quite impressed by the really nice audio amplifiers he designed and manufactured. It appears they are possibly still manufacturing hi-end "vintage style" tube amplifiers!

According to Bearden, the electrical energy that's powering everything around you is ALREADY a 1:1 release of "vacuum energy" (zpe, radiant, etc...).

In other words, we're burning up fossil fuels to FORCE the capture of this energy in heating elements, lamps, batteries, etc... This is what he means about allowing the captured energy (working power) to also destroy the dipole (generator charge separation). This then requires more physical input to drive the generator to produce more charge separation to keep the ZPE release going to power your load.
So if drawing ZPE is going to slow down the planet or something, it's already happening every time you make French toast. I'm more interested in finding ways not to have to choke on noxious fumes from expensive fuels.
Anyway, the Earth's magnetic field is almost zero at this point in time, so what would it matter?

Bearden's idea sounds a little like the negative energy accelerating the expansion of the universe that astronomers have come up with. I prefer to stick with Beaty's ideas which show no contradiction with established knowledge.

It struck me that the Bedini Device has a basic similarity with an atom. The electrons in an atom are moving in circles around the atom. The magnetic poles are also moving in circles. In both cases time varying electromagnetic fields will exist around the structures. These fields could interact with existing electromagnetic waves in the surrounding medium out to sizable distances. So the Bedini device could conceivably act as a collector of energy. But it's not then doing anything really mysterious. This leads to the further consideration: The most likely source of collected energy would be the 60 cycle energy that pervades our environment. This leads to some ideas for experimentation.

At 60 Hz a wavelength is 3100 miles. For a Bedini device to be scaled at the same size as an atom it would have to have a wheel diameter of about 3000 feet. Okay, not too practical. One could instead build a power system running at 60,000 Hz with a three foot wheel. This could be done on a small scale.

Another question involves interactions between Bedini devices. If each unit has a magnetic footprint out to large distances will two close units interact, and how. How close is close?
Also, a Bedini device may have a best frequency (greatest output power). At what frequency does this occur? Adjust the rpms while monitoring the power output by the method that I suggested.

Finally, by this analysis it should be possible to have the device function without a battery on the input by looping the output back in some manner.

If Bedini wants to sell a large number of these devices all he has to do is start a rumour that they rob power from the power companies. They'd sell like hotcakes. GeoM

Things are only mysterious until they are properly investigated. I suppose that curiosity is why I built one of these things.

From what I've seen so far there are two things going on here - one is the EMF energy collection thing, and the other is the charging of the second battery. There may be something there in pulse charging vs. regular 'brute force' as Tom W called it. There's posts in lots of locations on the board about that subject.

About the frequency of operation - you're right it does bear investigation. The main current consumer is the driving circuit. If a load is attached to the spinning wheel, the current consumption actually goes down substantially. My unit spins at about 2,900 rpm unloaded, and uses about 280 MA off the powering battery. I have tried a 5" diameter x 2" high squirrel cage blower wheel mounted directly to the Bedini rotor. That fan slows the motor down to about 1,000 RPM and the current draw for the driving circuit drops to around 90 MA.
I have the secondary stage of this unit set up with a 555 timer and rheostat pulsing circuit so the cap can be pulsed into the battery at lower voltage and faster pulses, or higher voltage (per

pulse) and lower frequencies. There is a sort of sweet spot where you can adjust the pulse frequency and actually watch the voltage measured across the battery under charge rise.
So far I can tell you that the voltage measured across the battery under charge rises to about 15 volts after the motor has been running for 10 minutes or so. It doesn't seem to make much difference whether the fan is attached to the motor or not.

More investigation and trials are needed. I'd really encourage anybody who's the least bit interested to build one of these things and start observing and testing. It only took me about 4 hours to build mine, mostly out of parts in the electronic junk drawer.
Ted.

BATTERY TEST FOR THE BEDINI MOTOR GENERATOR

DATE : OCTOBER 13, 2000; BATTERY TEST SEQUENCE:

One lead acid gel-cell (12 volts, 450 milliamps) is being utilized as the primary source fully charged at 12.5 volts

Three (3) lead acid gel-cell batteries (12 volt, 450 milliamps) strapped in parallel are being used as the charge destination. The batteries are discharged to 10 volts for the test purposes.

Test #1 starts at 10:45 AM utilizing primary battery fully charged at 12.5 volts charging three (3) destination batteries paralleled. The destination batteries reach a charge capacity of 14 volts at 11:20 AM.

The destination batteries are then discharged to 10 volts under working load to prepare for Test #2.

Test #2 starts at 11:25 AM utilizing primary battery measured at 11.5 volts. Charging three (3) destination batteries paralleled. The destination batteries reach a charge capacity of 14 volts at 12:50 PM.

The destination batteries are then discharged to 10 volts under working load to prepare for Test #3.

Test #3 starts at 1:00 PM utilizing primary battery measured at 10.5 volts. Charging three (3) destination batteries paralleled. The destination batteries reach a charge capacity of 14 volts at 1:40 PM.

The destination batteries are then discharged to 10 volts under working load to prepare for Test #4.

Test #4 starts at 2:05 PM utilizing primary battery measured at 9.5 volts. Charging three (3) destination batteries paralleled. The destination batteries reach a charge capacity of 13 volts at 2:40 PM. The primary battery is now discharged to 9 volts under working load and unable to further run the Bedini motor generator.

TOTAL BATTERIES CHARGED:

12 lead acid gel-cell batteries (12 volts, 450 milliamps each). This ratio is a 12 to 1 charging factor. The motor operation (work) being performed as this was done is not included as an additional factor in this test.

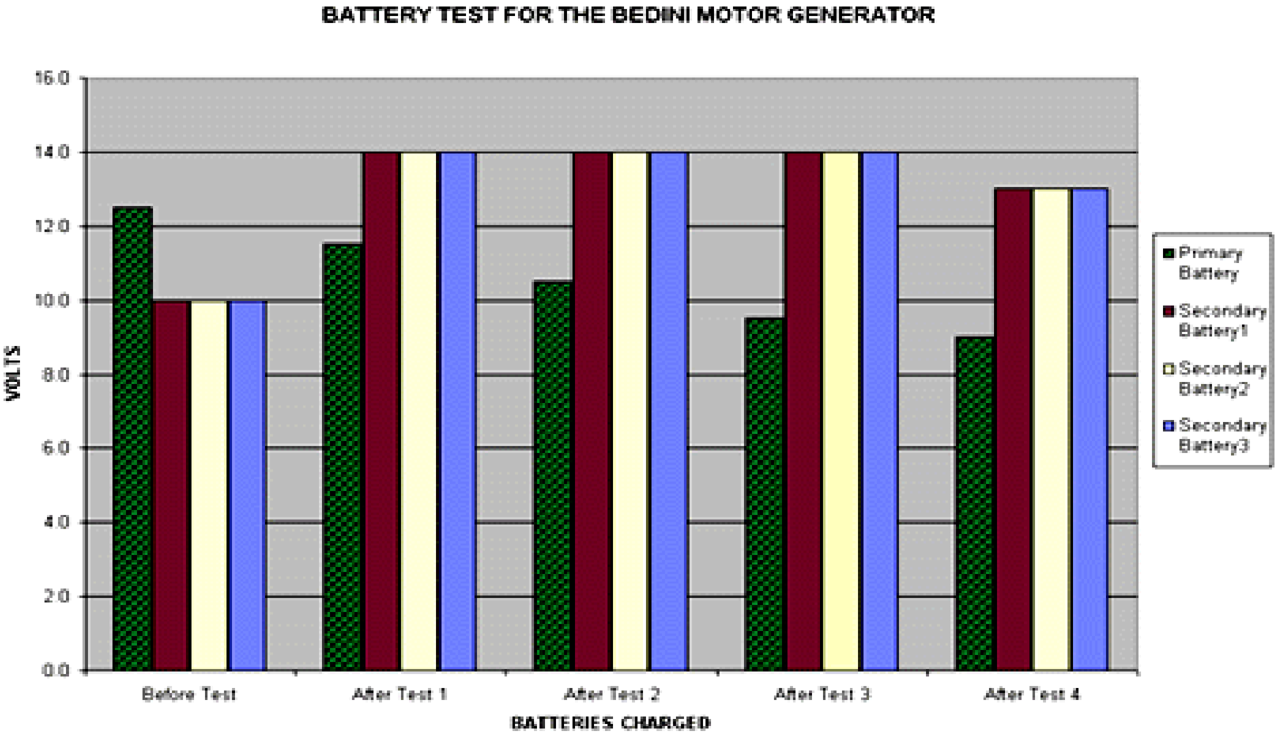

From: www.peswiki.com

"School Girl" Science Fair Bedini Motor Replication

Bedini's original model, September 2004

"The School Girl Radiant Energy Circuit and Motor is the most basic rendition of a patented circuit developed by John Bedini and researched by Dr. Peter A. Lindemann, based on the technology of Nikola Tesla, with follow-up work by Edwin Gray, Moray, and others. Bedini has done away with the need for a discharge gap. This "School Girl (Simplified)" design is the most basic presentation of the Bedini system. The circuit is run by an input battery, and charges an output battery, while turning a wheel, lined with magnets, that service to create a flux in the coils. There are some unusual characteristics observed in the process.

"Operation ~ The motor has to be started by an external push, after which it turns on its own from the firing of the coil electromagnet. It gradually increases in speeds until it reaches an optimum at around 300 rpm. Applying load to the wheel results in lower amperage going from the input battery because it is dependant on the rate of firing only.
"Features ~ Simple design. Inexpensive. Charger device whose output is friendly to batteries. Doesn't heat them, but actually refurbishes them. Charging takes less energy input by far than what is normally required, implicating Radiant (or whatever name is most suitable) energy infusion in the process. "

Assembly Notes
The Frame Stand needs to be non-magnetic, and mechanically stable front-to-back and left-to-right. The gap between the coil spool and wheel with magnets affixed (super-glue and tape) should be 1/8 inch. The gap should be variable for experimental purposes.
Determine the "North" end of the magnets with a compass, and label it. The "north" end of a compass needle will be attracted to the "south" pole of the magnet. All the magnets are mounted with the North pole facing out, toward the coil.
Equal-distance spacing of the magnets on the wheel's perimeter is not critical with one coil. There is a limiting minimum distance, but not a maximum. Spacing need not be uniform. If you plan to add more coils --- with a separate circuit for each coil --- spacing must be symmetrical for proper firing. Do not space the magnets closer apart than 1.5 to 2 widths.
Coils are loosely wound with approximately 450 turns. The two wires on the coil are wound together. The number of turns is not critical, but an accurate count is necessary for proper scientific recording.

Miscellaneous Tips & Precautions
Spacing of the magnets on the wheel's perimeter is not critical with one coil. There is a limiting minimum distance, but not a maximum. Spacing need not be uniform.
Do not draw power from the battery while it is being charged. Charge one bank of batteries, and discharge another bank, switching between them.
This design can shock, though not dangerously.

If the neon bulb is not in place, The transistor will burn out if the neon bulb is not installed, and if the device is run without a receiver-load (battery) for the radiant energy. The neon bulb serves as a "shock absorber" for excess output energy.

Circuit Diagram (Drawn by Bedini) >>

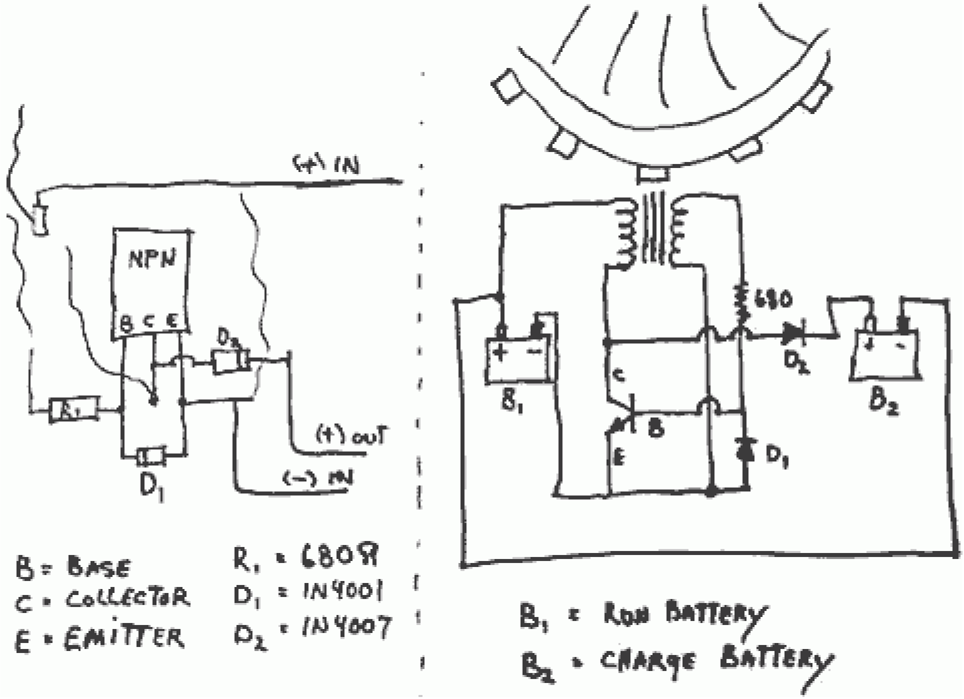

B = Base
C = Collector
E = Emitter
R1 = 680 Ohms resistor
D1 = 1N4001 Diode
D2 = 1N4007 Diode
B1 = Run Battery
B2 = Charge Battery

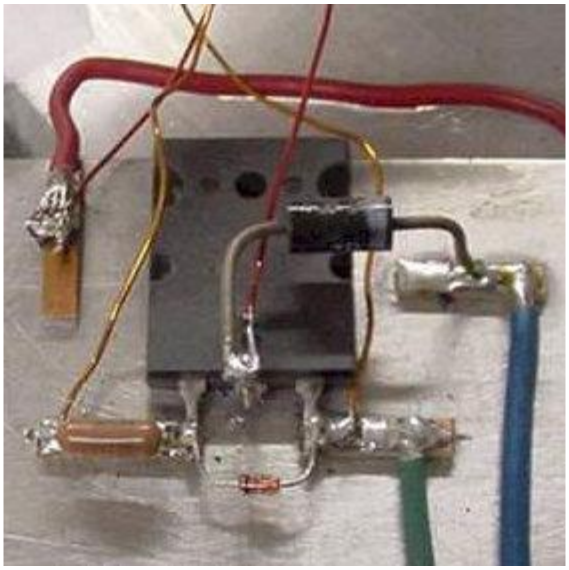

Analogous Circuit

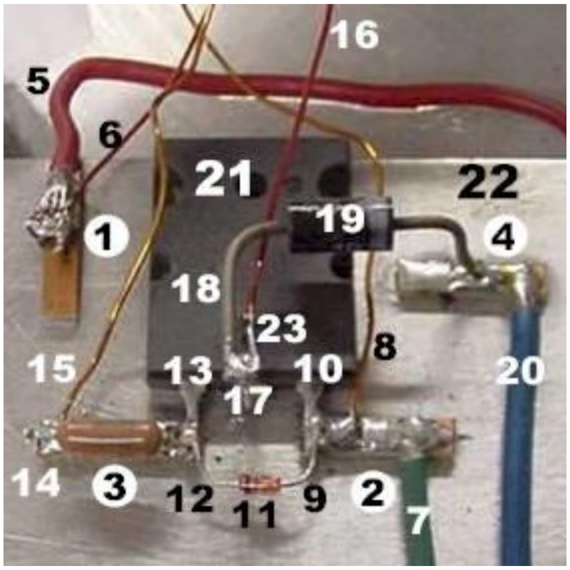

Numbered Analogous Circuit

Key

1 --- Solder junction (insulated base [same for 2,3,4]) joining (a) wire coming from (+) battery "in" and (b) #20 magnetic wire to coil and then to collector

2 --- Solder junction joining (a) wire coming from (-) battery "in" and (b) emitter and (c) Diode 1N4001 and (e) #23 magnetic wire going to coil then resistor then base.

3 --- Resistor 680 Ohms, between (a) Base/Diode1N4001 and (b) #23 magnet wire going to coil then collector.

4 --- Solder junction joining (a) diode {19} (1N4007) and (b) wire to battery receiving charge.

5 --- Insulated wire coming from (+) battery "in"

6 --- #20 magnetic wire from (+) battery "in" to coil and then to collector

7 --- Insulated wire coming from (-) battery "in"

8 --- #23 magnet wire coming from emitter to coil to resistor.

9 --- Wire connecting 1N4001 diode to junction {2}

10 --- Transistor emitter, connected to junction {2}

12 --- Wire connecting 1N4001 diode to (a) base and (b) resistor {3}.

13 --- Transistor base: connected to resistor and diode 1N4001

14 --- Resistor connected to #23 magnet wire going to coil then to emitter.

15 --- from resistor to #23 magnet wire to coil to emitter

16 --- #20 magnet wire (per Bedini SG specs) from transistor's "collector" lead

17 --- connection of transistor's "collector" lead to wire to Diode 19 and to #20 magnet wire 16 to coil to input battery's positive lead

18 --- wire from transistor's "collector" lead to Diode 19

19 --- 1N4007 Diode 1000V

20 --- Insulated wire to positive terminal of battery receiving charge

21 --- Transistor (Different one in this photo than is called in these plans)

22 --- Aluminium plate heat sink

23 --- Neon bulb, between collector and emitter. (not shown in picture, nor schematic, but that is where it goes, and that is where it is situated on the school girl simplified demonstrated in Bedini's shop).

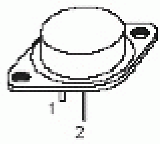

Transistor 2N3055 >>

5.1.0.0. Pulsed abnormal Glow Discharge (PAGD) Technologie

Mehr Informationen können Sie bekommen zur „Pulsed abnormal Glow Discharge (PAGD) Technologie“ in einem 91seitigen Bericht der zwar nicht in der Buchreihe des Ministeriums erschienen und deshalb auch nicht im Buchhandel erhältlich ist. Dieser Bericht, kann jedoch kostenlos bestellt werden beim BMZ, z. Hd. Dr. Jochen Böhmer, Adenauerallee 139-141, D-53113 Bonn, unter Angabe des Titels und der Bericht-Nummer *E 5001-15*.

Am besten schriftlich bestellen oder beim Bestellservice für Publikationen der Bundesregierung, Rostock: Tel. 0049/1888 80 80 800 E-Mail: publikationen@bundesregierung.de

5.1.0.1. Black Light-Process

Die Energieausbeute soll 100mal größer wie bei der Wasserstoffverbrennung sein.

Black Light Power has invented a novel chemical process of causing the latent energy stored in the hydrogen atom to be released as a new primary energy source. This allows the negatively charged electron that is otherwise in a stable orbit to move closer to the naturally attracting, positively charged nucleus to generate power as heat, light, and plasma (an energetic state of matter comprising a hot, glowing, ionized gas).

More info are under: http://www.blacklightpower.com/process.shtml

Mehr Informationen können Sie bekommen zum Black Light-Process in einem 91seitigen Bericht der zwar nicht in der Buchreihe des Ministeriums erschienen und deshalb auch nicht im Buchhandel erhältlich ist. Dieser Bericht, kann jedoch kostenlos bestellt werden beim BMZ, z. Hd. Dr. Jochen Böhmer, Adenauerallee 139-141, D-53113 Bonn, unter Angabe des Titels und der Bericht-Nummer *E 5001-15*.

Am besten ebenfalls schriftlich bestellen oder beim Bestellservice für Publikationen der Bundesregierung, Rostock: Tel. 0049/1888 80 80 800 E-Mail: publikationen@bundesregierung.de

5.1.0.2. Charge Cluster Technologie (Kondensierte Ladungs-Technik)

Diese Gruppe von neuen Technologien ist gekennzeichnet durch die Erzeugung einer hohen Dichte von Ladungsträgern in Form von hochorganisierten Clustern, d.h. Mikron-großen Ansammlungen von Elektronen mit kohärentem Verhalten. Solche Ladungscluster entstehen z.B. in Funken, Lichtbogen und anderen elektrischen Entladungen, in Gasen mit niedrigem Druck, in einigen Flüssigkeiten und bei Feldemission aus speziellen Elektroden. Sie können positive Ionen mitreißen, die dadurch bei ihrer Bewegung zu einer positiv geladenen Anode hin beschleunigt werden und nukleare Reaktionen auslösen können. Aus diesem Grunde ist die Technologie auch interessant für die Dekontamination von radioaktiven Abfällen. In CANR-Experimenten können hochdichte Ladungskondensationen Überschuß-Wärme erzeugen, wie dies Kenneth Shoulders zum erstenmal demonstriert hat. Sie sind auch in der Lage, eine Umwandlung von Elementen zustande zu bringen. Die Kategorie überschneidet sich sowohl mit CANR wie auch mit den Plasma -Technologien.

Mehr Informationen können Sie bekommen zur Charge Cluster Technologie (Kondensierte Ladungs-Technik) in einem 91seitigen Bericht der zwar nicht in der Buchreihe des Ministeriums erschienen und deshalb auch nicht im Buchhandel erhältlich ist. Dieser Bericht, kann jedoch kostenlos bestellt werden beim BMZ, z. Hd. Dr. Jochen Böhmer, Adenauerallee 139-141, D-53113 Bonn, unter Angabe des Titels und der Bericht-Nummer *E 5001-15*.

Am besten schriftlich bestellen oder beim Bestellservice für Publikationen der Bundesregierung, Rostock: Tel. 0049/1888 80 80 800 E-Mail: publikationen@bundesregierung.de

5.1.0.3. Method and apparatus for increasing electrical power; US #: 3,913,004;

October 14, 1975; Alexander; Robert W. (Pasadena, CA)

A form of rotating machine arranged in such a way as to convert a substantially constant input voltage into a substantially constant output voltage; involving generally a rotor that revolves at substantially constant speed within a stator and which comprises a transformer core subjected to and having a primary motor-transformer winding and a secondary transformer-generator winding; whereby transformed and generated power are synchronously combined as increased output power.

Description BACKGROUND

lectrical power is frequently changed in voltage, phase, frequency, and the current from alternating to direct or from direct to alternating. Voltage conversion in A.C. circuits is usually by means of transformers; and in DC circuits is usually by means of motor-generators. Phase conversion is also accomplished by either transformers or motor-generators; and frequency conversion is most simply done by motor-generators. Motor-generators have various classifications of use, as follows: (1) DC to DC used to charge batteries and to boost voltage; (2) A.C. to A.C. used for frequency and phase conversion; (3) A.C. to DC used for all types of service, such as battery charging, generator and motor field excitation, railways, electrolysis, and speed control etc.; and (4) DC to A.C. used to limited extent for special applications. To these ends combination motor-generators have been built, such as dynamotors stepping up DC voltage for radio equipment and amplidynes for reproducing a weak signal at a higher power level. When a particular variable frequency A.C. is required of a motor-generator set and the power supply is DC, the equipment will include a DC motor for variable speed and a separate alternator driven thereby. Such equipment is special in nature and characterized by separation of the motor and generator and by polyphase (usually three-phase) generator windings and with auto transformers having suitable taps for obtaining the required voltages; and a DC speed controller for the motor. The phase output of such equipment is selective and its single phase capacity necessarily restricted (66%) as compared with its three-phase capacity, in which case transmission efficiency for single phase is poor. When a higher level power output is desired, the amplidyne is employed with field windings and brushes equipped for the purpose, and in some instances to give a constant current output from a constant voltage input, for example in inverted rotary converter provided to convert DC to A.C. However, the present invention is concerned with method and apparatus for increasing electrical power and provides a dynamo-electric converter that operates from an electrical energy supply to most efficiently produce A.C. for a useful load. The method involves simultaneous motor-transformer-generator steps and the preferred embodiment of the apparatus involves a dynamo-electric converter (DEC) in the form of a rotary machine combined in a single rotor revolving within a stator, the rotor being comprised of a transformer core subjected to both a primary motor-transformer winding and a secondary transformer-generator winding, and the stator being comprised of magnetic field poles.

Synchronous converters have been combined in single rotor machines to produce DC from A.C., but that effect is quite different from the effect of the present invention when A.C. is to be produced from DC in a single rotor having primary and secondary armature windings as distinguished from armature windings common to both A.C. and DC circuits. With the present invention, both a transforming and a generating effect are conducted in the rotor, and all of which is inherently synchronized and delivered through the A.C. outlet leads. A.C. motors and DC generators have been combined in one machine, that is in one rotor, and referred to as synchronous converters. However, synchronous converters are lacking in their ability to change DC into A.C. when operating from the former as a prime mover to simultaneously

SUMMARY OF INVENTION

This method involves the placement of a primary winding in a field to both motor the same and to have a transformer effect with respect to a secondary winding also in a field to have a generator effect. In its preferred embodiment, this dynamo-electric converter is comprised of primary and secondary windings combined in a rotor commutated to alternate a DC energy supply in and thereby motivate the rotor within a stator field. The primary winding is advantageously of fewer turns than the secondary and by means of electromotive force drives the secondary windings of more turns to cut the magnetic lines of force for the generation of electrical energy at a higher voltage level than the DC supply. This DC operated motor is shunt wound with the stator field poles fully energized by the DC energy supply, or is provided with permanent magnet field poles, to efficiently motivate the rotor and efficiently generate electrical energy in the secondary windings. The A.C. output of the secondary windings is inherently synchronized with the transformer function of the primary windings combined in the common slots of the single rotor; and by adding the transformer and generator voltages and amperages the wattage is correspondingly increased at the output.

DRAWINGS

The various objects and features of this invention will be fully understood from the following detailed description of the typical preferred form and application thereof, throughout which description reference is made to the accompanying drawings, in which:

FIG. 1 is a diagrammatic schematic view of the dynamo-electric converter components comprising the present invention;

FIG. 2 is a diagram of a typical commutator brush, slip ring brush and field pole arrangement that is utilized;

FIG. 3 is a longitudinal section through a machine embodying the stator and rotor on bearings with the frame and brushes removed; FIG. 4 is a typical duplicate of an osciloscope diagram showing the power output of the dynamo-electric converter.

PREFERRED EMBODIMENT

The dynamo-electric converter is diagrammatically illustrated in the drawings and involves, generally, a rotor R carried upon spaced bearings B so as to rotate on an axis A concentric within a stator S. The rotor R comprises the armature while the stator S comprises the field, there being a commutator C associated with primary windings 10 on the rotor and slip rings SR associated with secondary windings 11 on the rotor. Brushes 12 and 13 are slideably engaged with the commutator and slip rings respectively, by conventional means, to conduct DC through the commutator C and to conduct A.C. through the slip rings SR. The brushes 12 and interconnected primary windings 10 comprise a motor while the brushes 13 and interconnected secondary windings 11 comprise a generator or alternator.

In practice, the field windings 16 can be separately energized or connected in parallel with the brushes 12 or shunted with respect to the primary motor winding 10. Motorization of the armature rotor R, or motoring thereof, causes continued polarity reversals on a cycle basis as determined by the speed of rotation, and this of course results in magnetic reversals in the rotor core 15 and a consequent induction in the secondary windings 11. A feature of this invention is the combining and cooperative relationship of the primary and secondary windings which occupy common slots in and embrace a common portion of the core 15 of the rotor R, thereby to have a transformer function as well as a generator function as the lines of magnetic force are cut by the secondary windings. The stator S has field poles of opposite magnetic polarity, excited independently from the armature, or as permanent magnets, and preferably shunted across the DC input. As shown, there are four equally spaced field poles in a circumferentially disposed series.

In practice, the primary DC motor windings are of fewer turns in the rotor slots than the secondary A.C. generator windings. For example the primary motor windings 10 are flat wound between north to south poles of the field while the secondary generator windings are flat wound in the same or common slots of the rotor armature. In a typical unit having a four brush commutator with 20 bars and having a 20 slot armature, the primary windings 10 are comprised of a number of turns of conductor to efficiently draw 48 volts DC at 25 amperes or 1200 Watts to rotate at 1750 RPM; while the secondary windings 11 are comprised of a number of turns of conductor to efficiently deliver 60 cycle (by transforming and generating) 110 volts A.C. at 32 amperes or 3520 Watts; the volt meter used to read these values upon an actual reduction to practice being calibrated to read the root-mean-square (rms) value of the pure sine wave, which is 70.7% of the peak voltage.
The reduction to practice hereinabove referred to as a "typical unit" was constructed of a machine originally designed as a self exciting 60 cycle 110 volt 2.5 KVA generator to be shaft driven by a separate prime mover. Firstly, the said prime mover was eliminated. The exciter windings were intended to excite the field at 45 volts DC delivered through the commutator, while the generator windings were intended to independently deliver 110-120 volts A.C. through the slip rings. The winding ratio between the exciter and generator windings was approximately one to three, and these are the values which determined the values employed in the present reduction to practice. However, it is to be understood that other values can be employed by design, for operation at the desired input and output voltages and amperages. It is also to be understood that the example reduction to practice disclosed herein is not necessarily the optimum design, in that other input-output power balances are contemplated, such as a DC battery input voltage substantially equal to the A.C. power voltage. In any case, an unexpected increase in power is realized by practicing this invention.

This dynamo electric converter inherently operates at a substantially constant angular velocity with the result that the alternating cycles of the output are substantially constant. Also, the DC input voltage can be maintained at a substantially constant level with the result that the A.C. output voltage is also substantially constant. As shown, the output is single phase A.C. in which case the effective power in Watts delivered is the product of current, voltage and power factor. Since the voltage is substantially constant, the current varies with load applied to the output as it is affected by the power factor. It will be seen therefore, that the apparent power represented by voltage times amperage is drawn directly from the DC input and applied to the primary motor winding 10 to motivate the rotor R for the functions hereinabove described. It will also be seen therefore, that the DC input is commutated into A.C. and transformed by induction from windings 10 into windings 11. And it will also be seen therefore, that the A.C. generated by motorization of the motor is synchronously imposed upon the windings 11, and all to the end that the two alternating currents are complementary and one added to the other. It will be observed that the output wattage is approximately triple the input wattage, by virtue of the synchronous superimposing of transformed input voltage and generated voltage while utilizing the former to operate the rotor in order to generate the latter. A feature of this invention is the separation of the primary and secondary circuits and the consequent isolation of the inverted input DC from the outlet A.C. and the utilization of input energy comensurate with output load according to amperage required for the operations to which this DEC machine is applied.

In carrying out this invention, the dynamo electric machine is conventional in design and the primary and secondary windings 10-11 are wound into the common slots of the armature as they are in self exciting generators. However, the primary windings 10 are motor-transformer windings and function totally as such. Similarly, the secondary windings 11 are wound into the armature slots together with the primary windings 10 and are powered with current that is alternated by virtue of the commutation and rotation of the armature, and consequently there is a transformer action between the primary windings 10 and secondary windings 11; and this transformer function is supplemented by generation of a superimposed current by virtue of the secondary windings 11 cutting the magnetic lines of force provided by the surrounding stator field. Consequently, there is a multiplying of power synchronously applied through the slip rings SR to the output brushes 13, and this increased output power is measurable as hereinabove described and double or almost triple that of the input power.

METHOD

Referring now to this method of increasing electrical power, input alternating current is applied to a primary winding to both motor and alternately magnetize a core. The said primary winding is immersed in a field and consequently is caused to motor and simultaneously to perform the first stage of transforming. A second stage of transforming is then performed by a secondary winding associated with said core to function as both a transformer and a generator winding, and the output current is drawn therefrom at an increased power value as compared with the input power; since the current induced by transformer action is superimposed upon the current generated in cutting the magnetic lines of force by motoring the secondary winding through said field. The direct application of A.C. power to the primary winding is contemplated, however the present and preferred embodiment employs commutation of DC power which is thereby inverted to A.C. power in the process of motoring said windings and the core means in which they are carried together with the secondary winding. The net result is three fold, in that there is a motoring function, a transforming function, and a generating function; all of which are inherently synchronized to increase the output power with respect to the input power.

From the foregoing it will be seen that this method, and the dynamo-electric converter termed a DEC, synchronously superimposes transformed electrical energy and mechanically generated electrical energy when inverting DC to A.C. as is shown by observing the osciliscope diagram duplicated in FIG. 3 of the drawings. The DC motor section of the rotor-stator unit will operate at its designed speed well within a small tolerance, by applying known engineering principles; and consequently the A.C. generator-alternator section thereof will operate at a substantially uniform frequency of, for example, 60 cycles per second. Thus, the output voltage potential is kept to a maximum while current is drawn as required, within the capacity of the unit design. Having described only a typical preferred form and application of my invention, I do not wish to be limited or restricted to the specific details herein set forth, but wish to reserve to myself any modifications or variations that may appear to those skilled in the art:

5.1.0.4. The CH Methernitha - Thesta-Distatika machines.

Die Methernitha ist eine christliche Vereinigung und firmiert als solche in der Form einer Genossenschaft, das ist etwas ungewöhnlich aber warum auch nicht!?

Ihre Mitglieder versuchen ein Tatchristentum zu leben. Sie wollen bewußt als christlich und biblisch verankerte Prinzipien in ihrem persönlichen wie auch in ihrem gemeinschaftlichen Leben umsetzen. Das ist mehr als anzuerkennen aber um so befremdeter wirkt die Tatsache das sie die Funktionsweise der Thestatica Maschine absolut geheimhalten.

Zum erklärten christlichen Weltbild erscheint mir diese tatsächlich Vorgangsweise doch sehr stark im Widerspruch zu stehen.

Die Thestatica ist offenbar das Resultat von einer über zwanzigjährigen Forschungsarbeit. Solche Forschungs- und Entwicklungsarbeit erfordert oft einen beträchtlichen finanziellen Aufwand. Einen finanzieller Aufwand für den die Schweizer „Methernitha” Gruppe die finanziellen Mittel einfach nicht hatte und so haben sie sich deshalb oft mit den einfachsten technischen Mitteln behelfen müssen, zum Teil mit Mitteln die die Wohlstandsgesellschaft weggeworfen hat.

Sie haben nie irgendwelche fremde finanzielle Hilfe beansprucht, denn wir sie wollten freie Schweizer bleiben und sich bei der Verwirklichung ihrer Ziele nicht behindern oder gar binden lassen und wir denken das war und ist bis heute der einzig richtige Ansatz.

Soviel ist zur Thestatica doch öffentlich bekannt geworden:

Die beiden in Gegenrichtung rotierenden Scheiben erzeugen eine elektrostatische Ladung. Die eine Scheibe stellt die Erde dar, die andere die Wolke. Mit Gitterelektroden wird die Ladung festgehalten. Dann wird sie von sogenannten Tastern berührungsfrei abgenommen und geordnet.

Die Scheiben laufen nach anfänglichem Andrehen von Hand von selbst nach den elektrostatischen Gesetzen von Abstoßung und Anziehung. Eine Gleichrichterdiode hält sie im Takte fest, weil sonst die Impulse der Anziehungs- und Abstoßungskraft sich verändern und die Scheiben immer schneller laufen würden. Die richtige Drehzahl ist sehr wichtig und für eine optimale Stromerzeugung müssen die Scheiben ganz ruhig und langsam laufen.

In den Gitterkondensatoren wird die Energie gespeichert und dann gleichmäßig abgegeben, wonach die hohe Spannung durch zusätzliche Einrichtungen heruntergesetzt wird und gleichzeitig die Leistung aufgebaut wird. Die Maschine gibt einen kontinuierlichen Gleichstrom ab, der in der Leistung von der Gösse des Modells abhängig ist. Ein Prototyp mit einem Scheibendurchmesser von 50cm gibt 3 – 4 KW Dauerleistung, je nach Luftfeuchtigkeit, wobei die Spannung zwischen 270 und 320V schwankt. Hohe Luftfeuchtigkeit verhindert den Aufbau der Spannung. Am besten ist trockene Luft.

Aus Sicht der CH Methernitha Forschungsgruppe müssen neue physikalische Begriffe geschaffen werden, einen davon haben sie bereits verwendet, indem sie die berührungslose Ladungsabnahme durch Gitterelektroden als "Taster" bezeichneten.

Mit den bisher erreichten Resultaten ist ein Hauptziel erreicht worden: Freie Energie kann nutzbar gemacht werden! Die Forschungsarbeiten aber gehen weiter.

5.1.0.5. Kalte Fusion

"Kalte Fusion" ist unter Physikern ein Schimpfwort für spektakuläre Entdeckungen, oder was nicht sein darf, darf eben nicht sein, und schon wieder sind wir bei der von praktisch jeder UNI angelernten Arroganz, die Erde ist eine Scheibe!

6.2.5.1. Prof. Taleyarkhan

vom "Oak Ridge National Laboratory" (ORNL) hat sich mit der kalten Fusion im Labor befaßt.

In einer speziellen Flüssigkeit erzeugt er mittels Neutronenstrahlung winzige Bläschen. Wenn diese Bläschen dann schließlich platzen, entsteht durch den Kollaps ein solch hoher Druck - und damit eine solch hohe Temperatur -, daß Bedingungen für die Fusion von Wasserstoff zu Helium erreicht werden: mehr als 20 Millionen Grad. Dennoch wollen manche Physiker das Ergebnis nicht glauben, ohne es allerdings selbst nachgebaut zu haben. Die Ergebnisse von Prof. Rusi Taleyarkhan wurden in "Science" abgedruckt. Nur nach peinlichster Prüfung durch Fachleute wird hier etwas abgedruckt. Sehr ungewöhnlich: Trotz dieser Überprüfung wurde der Herausgeber von Science dazu gedrängt, das Fusionsexperiment nicht zu veröffentlichen.

Statt Wasserstoffatomen sind Deuterium-Atome ins Aceton eingebaut, schwerer Wasserstoff, der sich erheblich leichter fusionieren läßt. Das Experiment beruht auf der Sonoluminiszenz. Mit Tönen wird das Aceton zum Schwingen gebracht. Dabei entstehen die Bläschen. Die Bläschen werden größer und größer und zerplatzen dann und fallen zusammen. Genau in diesem Moment sollen punktuell Drücke und Temperaturen entstehen, die eine Kernfusion ermöglichen, Millionen von Grad.

Es ist bekannt, daß man mit der Sonoluminiszenz sehr hohe Drücke und sehr hohe Temperaturen erreicht werden - aber auch so hoch, daß eine Kernfusion stattfinden kann?

"Es ist, als ob man eine Steinschleuder nimmt, sie langzieht und dann losläßt. Je weiter man sie zieht, desto mehr Energie baut man auf, um etwas nach vorn zu schleudern. In diesem Fall vergrößern die Forscher das Bläschen mehr und mehr, im Vergleich zu konventionellen Sonoluminiszenz - Experimenten, "bei denen die Bläschen sich nur um den Faktor 10 vergrößern. Von etwa 10 Mikrometern zu etwa 100 Mikrometern. In unserem Fall nehmen wir das Bläschen und vergrößern es um mehr als das Hunderttausendfache. Es ist, als nehmen wir unsere Steinschleuder und würden den Gummi von der Erde bis zur Sonne ziehen und dann loslassen."

Das menschliche Auge vermag dem nicht zu folgen, aber eine Hochgeschwindigkeits-Kamera kann zumindest die Entwicklung der Bläschen aufzeichnen, den Größenunterschied zwischen dem anfänglichen Bläschen und dem Bläschen kurz vor dem Zusammenfall zeigen die Bilder. Wenn sich dieses Experiment tatsächlich als Kernfusion erweist und wenn es sich tausendfach, millionen- oder gar milliardenfach vergrößern ließe was Taleyarkahns nächster geplanter Schritt ist - dann wäre es die Lösung für alle Energieprobleme der Menschheit.

Coming in out of the cold: Cold fusion, for real

For the last few years, mentioning cold fusion around scientists (myself included) has been a little like mentioning Bigfoot or UFO sightings.

After the 1989 announcement of fusion in a bottle, so to speak, and the subsequent retraction, the whole idea of cold fusion seemed a bit beyond the pale. But that's all about to change.

A very reputable, very careful group of scientists at the University of Los Angeles (Brian Naranjo, Jim Gimzewski, Seth Putterman) has initiated a fusion reaction using a laboratory device that's not much bigger than a bread-box, and works at roughly room temperature. This time, it looks like the real thing.

Before going into their specific experiment, it's probably a good idea to define exactly what nuclear fusion is, and why we're so interested in understanding the process. This also gives me an excuse to talk about how things work deep inside the nuclei of atoms, a topic near and dear to most astronomers (more on that later).

Simply put, nuclear fusion means ramming protons and neutrons together so hard that they stick, and form a single, larger nucleus. When this happens with small nuclei (like hydrogen, which has only one proton or helium, which has two), you get a lot of energy out of the reaction. This specific reaction, fusing two hydrogen nuclei together to get helium, famously powers our sun (good), as well as hydrogen bombs (bad).

Fusion is a tremendous source of energy; the reason we're not using it to meet our everyday energy needs is that it's very hard to get a fusion reaction going. The reason is simple: protons don't want to get close to other protons.

Do you remember learning about electricity in high school? I sure do - I dreaded it whenever that topic came around. I had a series of well-meaning science teachers that thought it would be fun for everyone to hold hands and feel a mild electric shock pass their arms. Every time my fists clenched and jerked and I had nothing consciously do with it, my stomach turned.

In addition, I have long, fine hair, and was often made a victim of the Van de Graf generator - the little metal ball with a rubber belt inside it that creates enough static electricity to make your hair stand on end. Yeesh.

Anyway, hopefully you remember the lesson that two objects having different electrical charges (positive and negative) attract one another, while those with the same charge repel. It's a basic law of electricity, and it definitely holds true when two protons try to get close together. Protons have positive charges, and they repel each other. Somehow, in order for fusion to work, you've got to overcome this repulsive electrical force and get the things to stick together.
Here's where an amazing and mysterious force comes in that, although we don't think about it in our day-to-day lives, literally holds our matter together. There are four universal forces of nature, two of which you're probably familiar with: gravity and electromagnetism.

But there are two other forces that really only come in to play inside atomic nuclei: the strong and weak nuclear forces (and yes, the strong force is the stronger of the two, the weak is weaker. Scientists really have a way with names, dont they?) I'm going to focus on the strong force, as that's the one responsible for nuclear fusion.

The strong force is an attractive force between protons and neutrons - it wants to stick them together. If the strong force had its way, the entire universe would be one big super-dense ball of protons and neutrons, one big atomic nucleus, in fact.

Fortunately, the strong force only becomes strong at very small scales: about one millionth billionth of a meter. Yes, that's 0.000000000000001 meters. Any farther away, and the strong force loses its grip. But if you can get protons and neutrons that close together, the strong force becomes stronger than any other force in nature, including electricity.

That's important- all protons have the same charge, so they'd like to fly away from each other. But if you can get them close together, inside the volume of an atomic nucleus, the strong force will bind them together.

The whole trick with fusion is you've got to get protons close enough together for the strong force to overcome their electrical repulsion and merge them together into a nucleus. The sun does this pretty much by brute force. The sun has over 300,000 times the mass of the Earth, which means there's a lot of gravity weighing down on its core.

That pressure gets the sun's internal temperature up to several millions of degrees, which means that particles inside the sun's core are flying around at huge velocities. Everything is moving around so fast that protons sometimes get slammed together before their charges have a chance to repel. The strong force takes hold, and a new atom (helium) is born.
In this process, some of the mass of the protons is converted into energy, powering the sun and producing the light that will eventually reach the Earth as sunlight.

Scientists have gotten fusion to occur in the laboratory before, but for the most part, they've tried to mimic conditions inside the sun by whipping hydrogen gas up to extreme temperatures or slamming atoms together in particle accelerators. Both of those options require huge energies and gigantic equipment, not the sort of stuff easily available to build a generator. Is there any way of getting protons close enough together for fusion to occur that doesn’t require the energy output of a large city to make it happen?

The answer, it turns out, is yes.

Instead of using high temperatures and incredible densities to ram protons together, the scientists at UCLA cleverly used the structure of an unusual crystal.

Crystals are fascinating things; the atoms inside are all lined up in a tightly ordered lattice, which creates the beautiful structure we associate with crystals. Sometimes those orderly atoms create neat side-effects, like piezoelectricity, which is the effect of creating an electrical charge in a crystal by compressing it. Stressing the bonds between the atoms of some crystals causes electrons to build up on one side, creating a charge difference over the body of the crystal. Other crystals do this when you heat or cool them; these are called pyroelectric crystals.

The new cold fusion experiment went something like this: scientists inserted a small pyroelectric crystal (lithium tantalite) inside a chamber filled with hydrogen. Warming the crystal by about 100 degrees (from -30 F to 45F) produced a huge electrical field of about 100,000 volts across the small crystal.

The tip of a metal wire was inserted near the crystal, which concentrated the charge to a single, powerful point. Remember, hydrogen nuclei have a positive charge, so they feel the force of an electric field, and this one packed quite a wallop! The huge electric field sent the nuclei careening away, smacking into other hydrogen nuclei on their way out. Instead of using intense heat or pressure to get nuclei close enough together to fuse, this new experiment used a very powerful electric field to slam atoms together.

Unlike some previous claims of room-temperature fusion, this one makes intuitive sense: its just another way to get atoms close enough together for the strong force to take over and do the rest. Once the reaction got going, the scientists observed not only the production of helium nuclei, but other tell-tale signs of fusion such as free neutrons and high energy radiation.

This experiment has been repeated successfully and other scientists have reviewed the results: it looks like the real thing this time.

For the time being, don't expect fusion to become a readily available energy option. The current cold fusion apparatus still takes much more energy to start up than you get back out, and it may never end up breaking even. In the meantime, the crystal-fusion device might be used as a compact source of neutrons and X-rays, something that could turn out to be useful making small scanning machines. But it really may not be long until we have the first nuclear fusion-powered devices in common use.

So cold fusion is back, perhaps to stay. After many fits and starts, its finally time for everyday fusion to come in out of the cold.

5.1.0.6. Nuclear fusion reactor

Freshman's nuclear fusion reactor has USU physics faculty in awe
By Alan Edwards > Deseret Morning News

LOGAN — A widespread belief among physicists nowadays is that modern science requires squadrons of scientists and wildly expensive equipment.

Jeffrey D. Allred, Deseret Morning News

Spanish Fork High graduate Craig Wallace shows off his nuclear fusion reactor, based on the plans of Utah's own Philo Farnsworth, the inventor of TV.

Craig Wallace and Philo T. Farnsworth are putting the lie to all that.

Wallace, a baby-faced tennis player fresh out of Spanish Fork High School, had almost the entire physics faculty of Utah State University hovering (and arguing) over an apparatus he had cobbled together from parts salvaged from junk yards and charity drops.

The apparatus is nothing less than the *sine qua non* of modern science: a nuclear fusion reactor, based on the plans of Utah's own Philo Farnsworth, the inventor of television.

The reactor sat on a table with an attached vacuum pump wheezing away. A television monitor showed what was inside: a glowing ball of gas surrounded by a metal helix.

The ball is, literally, a small sun, where an electric field forces deuteron ions (a form of hydrogen) to gather, bang together and occasionally fuse, spitting out a neutron each time fusion occurs.

"Here I am with this thing here," Wallace mused, looking at his surroundings. "Who'da thought?"

Wallace and Farnsworth are much alike. Both are (or were — Farnsworth died in 1971) tinkerers. While Wallace was in grade school, his mother got a flat tire while he was riding with her. He fixed it. For his part, Farnsworth began improvising electric motors at a young age. Both went on to bigger and better things.

"He was never motivated to take science," said Wallace's father, Allen Wallace. "It was really the tinkering that motivated him."

When Craig was a sophomore in high school, browsing the Internet he discovered that Farnsworth had come up with a way to create deuteron ion plasma, a prerequisite to fusion.

While it was not good for production of energy (the source of much embarrassment to the University of Utah in the cold fusion debacle in the late 1980s), Farnsworth's design did emit neutrons, a useful tool for commercial applications and scientific experimentation.

Jeffrey D. Allred, Deseret Morning News

USU freshman physics major Craig Wallace, center, demonstrates his experiment to USU professors John Raitt, left, and Farrell Edwards.

"He (Farnsworth) was after the Holy Grail of excess energy, but everyone agrees that it's mostly useful as a neutron generator," Allen Wallace said.

About 30 such devices exist around the country, owned by such entities as Los Alamos National Laboratories, NASA and universities. ("I bet I'm the only high school student that has one," Craig Wallace said.)

Looking at Farnsworth's plans for the first time, Craig and his father both had the same thought: Now there's a science project.

They set to work. They found a neutron detector in an Idaho Falls scrap metal yard. Craig built a neutron modulator (which slows down the emitted neutrons so they can be detected) out of a few hundred spare CDs. They found a broken turbo molecular pump lying forgotten at Deseret Industries.

Too poor to buy pricey deuterium gas, Craig bought a container of deuterium oxide, or heavy water, for 20 bucks and came up with a way to make it a gas and get rid of the accompanying oxygen by passing it over heated magnesium filings.

Not bad for a backyard amateur who considered himself more mechanic than scientist.
"I teased him that he was now officially a science geek," Allen Wallace said.

One professor Friday stood nervously away from Wallace's reactor — which is notably free from any shielding — but he needn't have worried: Wallace's detector measures 36 neutrons per minute just in background radiation from space, and the device's usual output adds only four neutrons per minute. People in airplanes absorb much more than that.
It took two years of gathering materials and six months of assembly, but the final product actually, incongruously, works.
“(This was) the day I achieved a Poisser plasma reaction," Wallace wrote next to a picture of the glowing ball. "Probably the coolest thing I have ever seen."

Others thought it was cool, too. Wallace began winning contests — local, state, national — culminating in second place in the International Intel Science and Engineering Fair last May in Cleveland. He's now beginning work on a USU physics degree.
"The whole thing combines chemistry, engineering, physics," he said. "Put them all together and you come out with something pretty sweet."

Farnsworth would have been proud.

5.1.0.7. Johnson; Howard R. US. #: 4,151,431; (Grass Lake, MI);

Erteilt: April 24, 1979. (Dieses Patent wurde aber bereits 1973 eingereicht!)
Permanent magnet motor

The invention is directed to the method of utilizing the unpaired electron spins in ferro magnetic and other materials as a source of magnetic fields for producing power without any electron flow as occurs in normal conductors, and to permanent magnet motors for utilizing this method to produce a power source. In the practice of the invention the unpaired electron spins occurring within permanent magnets are utilized to produce a motive power source solely through the superconducting characteristics of a permanent magnet and the magnetic flux created by the magnets are controlled and concentrated to orient the magnetic forces generated in such a manner to do useful continuous work, such as the displacement of a rotor with respect to a stator. The timing and orientation of magnetic forces at the rotor and stator components produced by permanent magnets to produce a motor is accomplished with the proper geometrical relationship of these components.

FIELD OF THE INVENTION

The invention pertains to the field of permanent magnet motor devices solely using the magnetic fields created thereby to product motive power.

BACKGROUND OF THE INVENTION

Conventional electric motors employ magnetic forces to produce either rotative or linear motion. Electric motors operate on the principle that when a conductor is located in a magnetic field which carries current a magnetic force is exerted upon it. Normally, in a conventional electric motor, the rotor, or stator, or both, are so wired that magnetic fields created by electromagnetic may employ attraction, repulsion, or both types of magnetic forces, to impose a force upon the armature to cause rotation, or to cause the armature to be displaced in a linear path. Conventional electric motors may employ permanent magnets either in the armature or stator components, but in the art heretofore known the use of permanent magnets in either the stator or armature require the creation of an electromagnetic field to act upon the field produced by the permanent magnets, and switching means are employed to control the energization of the electromagnets and the orientation of the magnetic fields, to produce the motive power.

It is my belief that the full potential of magnetic forces existing in permanent magnets has not been recognized or utilized because of incomplete information and theory with respect to the atomic motion occurring within a permanent magnet. It is my belief that a presently unnamed atomic particle is associated with the electron movement of a superconducting electromagnet and the lossless current flow of Amperian currents in permanent magnets. The unpaired electron flow is similar in both situations. This small particle is believed to be opposite in charge and to be located at right angles to the moving electron, and the particle would be very small as to penetrate all known elements, in their various states as well as their known compounds, unless they have unpaired electrons which capture these particles as they endeavours to pass there through.

Ferro electrons differ from those of most elements in that they are unpaired, and being unpaired they spin around the nucleus in such a way that they respond to magnetic fields as well as creating one themselves. If they were paired, their magnetic fields would cancel out. However, being unpaired they create a measurable magnetic field if their spins have been oriented in one direction. The spins are at right angles to their magnetic fields.
In niobium superconductors at a critical state, the magnetic lines of force cease to be at right angles. This change must be due to establishing the required conditions for unpaired electronic spins instead of electron flow in the conductor, and the fact that very powerful electromagnets that can be formed with superconductors illustrates the tremendous advantage of producing the magnetic field by unpaired electron spins rather than conventional electron flow.

In a superconducting metal, wherein the electrical resistance becomes greater in the metal than the proton resistance, the flow turns to electron spins and the positive particles flow parallel in the metal in the manner occurring in a permanent magnet where a powerful flow of magnetic positive particles or magnetic flux causes the unpaired electrons to spin at right angles. Under cryogenic super conduction conditions the freezing of the crystals in place makes it possible for the spins to continue, and in a permanent magnet the grain orientation of the magnetized material results in the spins permitting them to continue and for the flux to flow parallel to the metal. In a superconductor, at first the electron is flowing and the positive particle is spinning; later, when critical, the reverse occurs, i.e., the electron is spinning and the positive particle is flowing at right angles. These positive particles will thread or work their way through the electron spins present in the metal.

In a sense, a permanent magnet may be considered the only room temperature superconductor. It is a superconductor because the electron flow does not cease, and this electron flow can be made to do work because of the magnetic field it supplies. Previously, this source of power has not been used because it was not possible to modify the electron flow to accomplish the switching functions of the magnetic field. Such switching functions are common in a conventional electric motor where electrical current is employed to align the much greater electron current in the iron pole pieces and concentrate the magnetic field at the proper places to give the thrust necessary to move the motor armature. In a conventional electric motor, switching is accomplished by the use of brushes, commutators, alternating current, or other known means.

In order to accomplish the switching function in a permanent magnet motor, it is necessary to shield the magnetic leakage so that it will not appear as too great a loss factor at the wrong places. The best method to accomplish this is to use the superconductor of magnetic flux and concentrate it to the place where it will be the most effective. Timing and switching can be achieved in a permanent magnet motor by concentrating the flux and using the proper geometry of the motor rotor and stator to make most effective use of the magnetic fields generated by the electron spins. By the proper combination of materials, geometry and magnetic concentration, it is possible to achieve a mechanical advantage of high ratio, greater than 100 to 1, capable of producing a continuous motive force.

To my knowledge, previous work done with permanent magnets, and motive devices utilizing permanent magnets, have not achieved the result desired in the practice of the inventive concept, and it is with the proper combination of materials, geometry and magnetic concentration that the presence of the magnetic spins within a permanent magnet may be utilized as a motive force.

SUMMARY OF THE INVENTION

It is an object of the invention to utilize the magnetic spinning phenomenon of unpaired electrons occurring in ferro magnetic material to produce the movement of a mass in a unidirectional manner as to permit a motor to be driven solely by magnetic forces as occurring within permanent magnets. In the practice of the inventive concepts, motors of either linear or rotative types may be produced.It is an object of the invention to provide the proper combination of materials, geometry and magnetic concentration to utilize the force generated by unpaired electron spins existing in permanent magnets to power a motor. Whether the motor constitutes a linear embodiment, or a rotary embodiment, in each instance the "stator" may consist of a plurality of permanent magnets fixed relative to each other in space relationship to define a track, linear in form in the linear embodiment, and circular in form in the rotary embodiment. An armature magnet is located in spaced relationship to such track defined by the stator magnets wherein an air gap exists there between. The length of the armature magnet is defined by poles of opposite polarity, and the length of the armature magnet is disposed relative to the track defined by the stator magnets in the direction of the path of movement of the armature magnet as displaced by the magnetic forces. The stator magnets are so mounted that poles of like polarity are disposed toward the armature magnet and as the armature magnet has poles which are both attracted to and repelled by the adjacent pole of the stator magnets, both attraction and repulsion forces act upon the armature magnet to produce the relative displacement between the armature and stator magnets. The continuing motive force producing displacement between the armature and stator magnets results from the relationship of the length of the armature magnet in the direction of its path of movement as related to the dimension of the stator magnets, and the spacing there between, in the direction of the path of armature magnet movement. This ratio of magnet and magnet spacing, and with an acceptable air gap spacing between the stator and armature magnets, will produce a resultant force upon the armature magnet which displaces the armature magnet across the stator magnet along its path of movement.

In the practice of the invention movement of the armature magnet relative to the stator magnets results from a combination of attraction and repulsion forces existing between the stator and armature magnets. By concentrating the magnetic fields of the stator and armature magnets the motive force imposed upon the armature magnet is intensified, and in the disclosed embodiments such magnetic field concentration means are disclosed. The disclosed magnetic field concentrating means comprise a plate of high magnetic field permeability disposed adjacent one side of the stator magnets in substantial engagement therewith. This high permeability material is thus disposed adjacent poles of like polarity of the stator magnets. The magnetic field of the armature magnet may be concentrated and directionally oriented by bowing the armature magnet, and the magnetic field may further be concentrated by shaping the pole ends of the armature magnet to concentrate the magnet field at a relatively limited surface at the armature magnet pole ends.

Preferably, a plurality of armature magnets are used which are staggered with respect to each other in the direction of armature magnet movement. Such an offsetting or staggering of the armature magnets distributes the impulses of force imposed upon the armature magnets and results in a smoother application of forces to the armature magnet producing a smoother and more uniform movement of the armature component.

In the rotary embodiment of the permanent magnet motor of the invention the stator magnets are arranged in a circle, and the armature magnets rotate about the stator magnets. Means are disclosed for producing relative axial displacement between the stator and armature magnets to adjust the axial alignment thereof, and thereby regulate the magnitude of the magnetic forces being imposed upon the armature magnets. In this manner the speed of rotation of the rotary embodiment may be regulated.

BRIEF DESCRIPTION OF THE DRAWINGS

The aforementioned objects and advantages of the invention will be appreciated from the following description and accompanying drawings wherein: FIG. 1 is a schematic view of electron flow in a superconductor indicating the unpaired electron spins, FIG. 2 is a cross-sectional view of a superconductor under a critical state illustrating the electron spins, FIG. 3 is a view of a permanent magnet illustrating the flux movement there through, FIG. 4 is a cross-sectional view illustrating the diameter of the magnet of FIG. 3, FIG. 5 is an elevational representation of a linear motor embodiment of the permanent magnet motor of the invention illustrating one position of the armature magnet relative to the stator magnets, and indicating the magnetic forces imposed upon the armature magnet, IG. 6 is a view similar to FIG. 5 illustrating displacement of the armature magnet relative to the stator magnets, and the influence of magnetic forces thereon at this location, FIG. 7 is a further elevational view similar to FIGS. 5 and 6 illustrating further displacement of the armature magnet to the left, and the influence of the magnetic forces thereon,

FIG. 8 is a top plan view of a linear embodiment of the inventive concept illustrating a pair of armature magnets in linked relationship disposed above the stator magnets, IG. 9 is a diametrical, elevational, sectional view of a rotary motor embodiment in accord with the invention as taken along section IX--IX of FIG. 10, and FIG. 10 is an elevational view of the rotary motor embodiment as taken along section X--X of FIG. 9.

DESCRIPTION OF THE PREFERRED EMBODIMENTS

In order to better understand the theory of the inventive concept, reference is made to FIGS. 1 through 4. In FIG. 1 a superconductor 1 is illustrated having a positive particle flow as represented by arrow 2, the unpaired electrons of the ferrous conducting material 1 spin at right angles to the proton flow in the conductor as represented by the spiral line and arrow 3. In accord with the theory of the invention the spinning of the ferrous unpaired electrons results from the atomic structure of ferrous materials and this spinning atomic particle is believed to be opposite in charge and located at right angles to the moving electrons. It is assumed to be very small in size capable of penetrating other elements and their compounds unless they have unpaired electrons which capture these particles as they endeavour to pass there through.

The lack of electrical resistance of conductors at a critical superconductor state has long been recognized, and superconductors have been utilized to produce very high magnetic flux density electromagnets. FIG. 2 represents a cross section of a critical superconductor and the electron spins are indicated by the arrows 3. permanent magnet may be considered a superconductor as the electron flow therein does not cease, and is without resistance, and unpaired electric spinning particles exist which, in the practice of the invention, are utilized to produce motor force. FIG. 3 illustrates a horseshoe shaped permanent magnet at 4 and the magnetic flux there through is indicated by arrows 5, the magnetic flow being from the south pole to the north pole and through the magnetic material. The accumulated electron spins occurring about the diameter of the magnet 5 are represented at 6 in FIG. 4, and the spinning electron particles spin at right angles in the iron as the flux travels through the magnet material.

By utilizing the electron spinning theory of ferrous material electrons, it is possible with the proper ferromagnetic materials, geometry and magnetic concentration to utilize the spinning electrons to produce a motive force in a continuous direction, thereby resulting in a motor capable of doing work. It is appreciated that the embodiments of motors utilizing the concepts of the invention may take many forms, and in the illustrated forms the basic relationships of components are illustrated in order to disclose the inventive concepts and principles. The relationships of the plurality of magnets defining the stator 10 are best appreciated from FIGS. 5 through 8. The stator magnets 12 are preferably of a rectangular configuration, FIG. 8, and so magnetized that the poles exist at the large surfaces of the magnets, as will be appreciated from the N (North) and S (South) designations. The stator magnets include side edges 14 and 16 and end edges 18. The stator magnets are mounted upon a supporting plate 20, which is preferably of a metal material having a high permeability to magnetic fields and magnetic flux such as that available under the trademark Netic CoNetic sold by the Perfection Mica Company of Chicago, Illinois. Thus, the plate 20 will be disposed toward the south pole of the stator magnets 12, and preferably in direct engagement therewith, although a bonding material may be interposed between the magnets and the plate in order to accurately locate and fix the magnets on the plate, and position the stator magnets with respect to each other.

Preferably, the spacing between the stator magnets 12 slightly differs between adjacent stator magnets as such a variation in spacing varies the forces being imposed upon the armature magnet at its ends, at any given time, and thus results in a smoother movement of the armature magnet relative to the stator magnets. Thus, the stator magnets so positioned relative to each other define a track 22 having a longitudinal direction left to right as viewed in FIGS. 5 through 8.
In FIGS. 5 through 7 only a single armature magnet 24 is disclosed, while in FIG. 8 a pair of armature magnets are shown. For purposes of understanding the concepts of the invention the description herein will be limited to the use of single armature magnet as shown in FIGS. 5 through 7.

The armature magnet is of an elongated configuration wherein the length extends from left to right, FIG. 5, and may be of a rectangular transverse cross-sectional shape. For magnetic field concentrating and orientation purposes the magnet 24 is formed in an arcuate bowed configuration as defined by concave surfaces 26 and convex surfaces 28, and the poles are defined at the ends of the magnet as will be appreciated from FIG. 5. For further magnetic field concentrating purposes the ends of the armature magnet are shaped by bevelled surfaces 30 to minimize the cross-sectional area at the magnet ends at 32, and the magnetic flux existing between the poles of the armature magnet are as indicated by the light dotted lines. In like manner the magnetic fields of the stator magnets 12 are indicated by the light dotted lines.

The armature magnet 24 is maintained in a spaced relationship above the stator track 22. This spacing may be accomplished by mounting the armature magnet upon a slide, guide or track located above the stator magnets, or the armature magnet could be mounted upon a wheeled vehicle carriage or slide supported upon a nonmagnetic surface or guide way disposed between the stator magnets and the armature magnet. To clarify the illustration, the means for supporting the armature magnet 24 is not illustrated and such means form no part of invention, and it is to be understood that the means supporting the armature magnet prevents the armature magnet from moving away from the stator magnets, or moving closer thereto, but permits free movement of the armature magnet to the left or right in a direction parallel to the track 22 defined by the stator magnets.

It will be noted that the length of the armature magnet 24 is slightly greater than the width of two of the stator magnets 12 and the spacing there between. The magnetic forces acting upon the armature magnet when in the position of FIG. 5 will be repulsion forces 34 due to the proximity of like polarity forces and attraction forces at 36 because of the opposite polarity of the south pole of the armature magnet, and the north pole field of the sector magnets. The relative strength of this force is represented by the thickness of the force line.

The resultant of the force vectors imposed upon the armature magnet as shown in FIG. 5 produce a primary force vector 38 toward the left, FIG. 5, displacing the armature magnet 24 toward the left. In FIG. 6 the magnetic forces acting upon the armature magnet are represented by the same reference numerals as in FIG. 5. While the forces 34 constitute repulsion forces tending to move the north pole of the armature magnet away from the stator magnets, the attraction forces imposed upon the south pole of the armature magnet and some of the repulsion forces, tend to move the armature magnet further to the left, and as the resultant force 38 continues to be toward the left the armature magnet continues to be forced to the left.

FIG. 7 represents further displacement of the armature magnet 24 to the left with respect to the position of FIG. 6, and the magnetic forces acting thereon are represented by the same reference numerals as in FIGS. 5 and 6, and the stator magnet will continue to move to the left, and such movement continues the length of the track 22 defined by the stator magnets 12.
Upon the armature magnet being reversed such that the north pole is positioned at the right as viewed in FIG. 5, and the south pole is positioned at the left, the direction of movement of the armature magnet relative to the stator magnets is toward the right, and the theory of movement is identical to that described above.

In FIG. 8 a plurality of armature magnet s 40 and 42 are illustrated which are connected by links 44. The armature magnets are of a shape and configuration identical to that of the embodiment of FIG. 5, but the magnets are staggered with respect to each other in the direction of magnet movement, i.e., the direction of the track 22 defined by the stator magnets 12. By so staggering a plurality of armature magnets a smoother movement of the interconnected armature magnets is produced as compared when using a single armature magnet as there is variation in the forces acting upon each armature magnet as it moves above the track 22 due to the change in magnetic forces imposed thereon. The use of several armature magnets tends to "smooth out" the application of forces imposed upon linked armature magnets, resulting in a smoother movement of the armature magnet assembly. Of course, any number of armature magnets may be interconnected, limited only by the width of the stator magnet track 22. In FIGS. 9 and 10 a rotary embodiment embracing the inventive concepts is illustrated. In this embodiment the principle of operation is identical to that described above, but the orientation of the stator and armature magnets is such that rotation of the armature magnets is produced about an axis, rather than a linear movement being achieved. In FIGS. 9 and 10 a base is represented at 46 serving as a support for a stator member 48. The stator member 48 is made of a nonmagnetic material, such as synthetic plastic, aluminium, or the like. The stator includes a cylindrical surface 50 having an axis, and a threaded bore 52 is concentrically defined in the stator. The stator includes an annular groove 54 receiving an annular sleeve 56 of high magnetic field permeability material such as Netic Co-Netic and a plurality of stator magnets 58 are affixed upon the sleeve 56 in spaced circumferential relationship as will be apparent in FIG. 10. Preferably, the stator magnets 58 are formed with converging radial sides as to be of a wedge configuration having a curved inner surface engaging sleeve 56, and a convex outer pole surface 60. The armature 62, in the illustrated embodiment, is of a dished configuration having a radial web portion, and an axially extending portion 64. The armature 62 is formed of a nonmagnetic material, and an annular belt receiving groove 66 is defined therein for receiving a belt for transmitting power from the armature to a generator, or other power consuming device. Three armature magnets 68 are mounted on the armature portion 64, and such magnets are of a configuration similar to the armature magnet configuration of FIGS. 5 through 7. The magnets 68 are staggered with respect to each other in a circumferential direction wherein the magnets are not disposed as 120.degree. circumferential relationships to each other. Rather, a slight angular staggering of the armature magnets is desirable to "smooth out" the magnetic forces being imposed upon the armature as a result of the magnetic forces being simultaneously imposed upon each of the armature magnets. The staggering of the armature magnets 68 in a circumferential direction produces the same effect as the staggering of the armature magnets 40 and 42 as shown in FIG. 8. The armature 62 is mounted upon a threaded shaft 70 by antifriction bearings 72, and the shaft 70 is threaded into the stator threaded bore 52, and may be rotated by the knob 74. In this manner rotation of the knob 74, and shaft 70, axially displaces the armature 62 with respect to the stator magnets 58, and such axial displacement will very the magnitude of the magnetic forces imposed upon the armature magnets 68 by the stator magnets thereby controlling the speed of rotation of the armature. As will be noted from FIGS. 4-7 and 9 and 10, an air gap exists between the armature magnet or magnets and the stator magnets and the dimension of this spacing, effects the magnitude of the forces imposed upon the armature magnet or magnets. If the distance between the armature magnets, and the stator magnets is reduced the forces imposed upon the armature magnets by the stator magnets are increased, and the resultant force vector tending to displace the armature magnets in their path of movement increases. However, the decreasing of the spacing between the armature and stator magnets creates a "pulsation" in the movement of the armature magnets which is objectionable, but can be, to some extent, minimized by using a plurality of armature magnets. The increasing of the distance between the armature and stator magnets reduces the pulsation tendency of the armature magnet, but also reduces the magnitude of the magnetic forces imposed upon the armature magnets. Thus, the most effective spacing between the armature magnets. Thus, the most effective spacing between the armature and stator magnets is that spacing which produces the maximum force vector in the direction of armature magnet movement, with a minimum creation of objectionable pulsation. In the disclosed embodiments the high permeability plate 20 and sleeve 56 are disclosed for concentrating the magnetic field of the stator magnets, and the armature magnets are bowed and have shaped ends for magnetic field concentration purposes. While such magnetic field concentration means result in higher forces imposed upon the armature magnets for given magnet intensities, it is not intended that the inventive concepts be limited to the use of such magnetic field concentrating means.

As will be appreciated from the above description of the invention, the movement of the armature magnet or magnets results from the described relationship of components. The length of the armature magnets as related to the width of the stator magnets and spacing there between, the dimension of the air gap and the configuration of the magnetic field, combined, produce the desired result and motion. The inventive concepts may be practiced even though these relationships may be varied within limits not yet defined and the invention is intended to encompass all dimensional relationships which achieve the desired goal of armature movement. By way of example, with respect to FIGS. 4-7, the following dimensions were used in an operating prototype:

The length of armature magnet 24 is 31/8", the stator magnets 12 are 1" wide, 1/4" thick and 4" long and grain oriented. The air gap between the poles of the armature magnet and the stator magnets is approximately 11/2" and the spacing between the stator magnets is approximately 1/2" inch.

In effect, the stator magnets define a magnetic field track of a single polarity transversely interrupted at spaced locations by the magnetic fields produced by the lines of force existing between the poles of the stator magnets and the unidirectional force exerted on the armature magnet is a result of the repulsion and attraction forces existing as the armature magnet traverses this magnetic field track.

It is to be understood that the inventive concept embraces an arrangement wherein the armature magnet component is stationary and the stator assembly is supported for movement and constitutes the moving component, and other variations of the inventive concept will be apparent to those skilled in the art without departing from the scope thereof. As used herein the term "track" is intended to include both linear and circular arrangements of the static magnets, and the "direction" or "length" of the track is that direction parallel or concentric to the intended direction of armature magnet movement.

Quelle: http://www.datadiwan.de/moch/moch_1d.htm

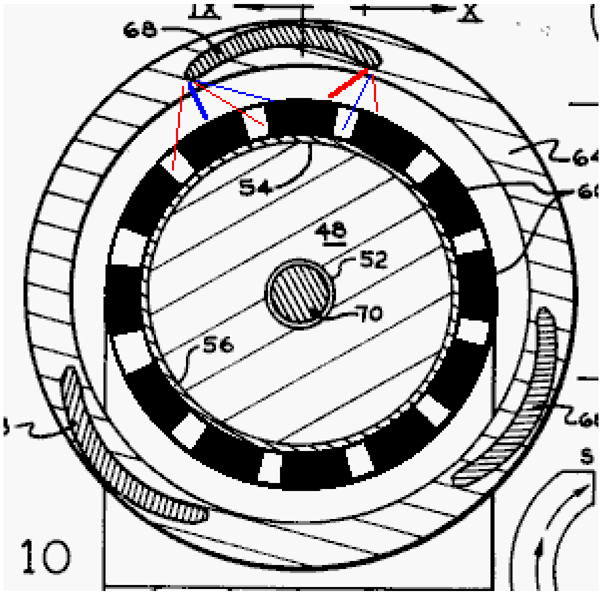

Titelseite aus dem Magazin Science & Mechanics von 1980

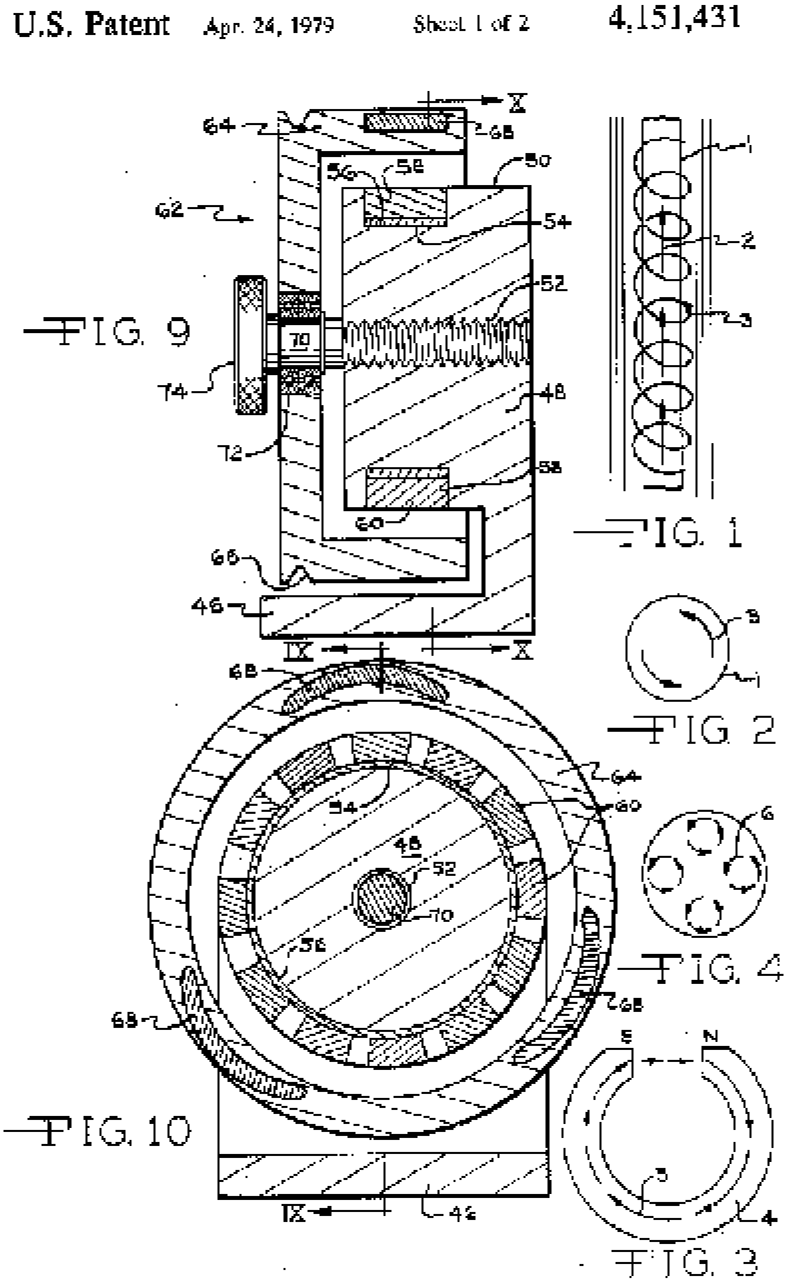

Als Howard Johnson sein Patent eines Permanentmagnet- Motors beim US- Patentamt anmeldeten wollte, rieb man sich verwundert die Augen und sagte ihm, daß man keine Perpetuum Mobile annehme, weil es nicht funktionieren könnte und das gegen das Energieerhaltungsgesetz verstößt. Doch es funktionierte. Johnson hatte herausgefunden, wie man einen Motor baute, der ohne Zugabe von Elektrizität oder irgendeiner anderen Energie lief. Sein U.S. Patent No. 4,151,431 beschreibt, wie eine Bewegung erzeugt wird, die nur durch die Energie, die in Atomen von Permanentmagneten enthalten ist, erzeugt wird. Mehr als sechs Jahre lang mußte sich Howard Johnson mit der Bürokratie des US- Patentamtes auseinandersetzen, bis er endlich 1979 sein Patent bekam.


Howard Johnson

Dieser Motor von Howard Johnsons Überlegungen hatte einen äußerst einfachen Aufbau, verglichen mit konventionellen Motoren. Dabei wurden Samarium- Kobalt-Magnete verwendet. Johnson beschreibt in diesem Patent einen Motor mit linearer Bewegung und einen weiteren mit einer Drehbewegung. Bei dem letzteren sitzen 13 Stator Magnete (beim Patent sind 12 zu sehen, aber im Magazin ist von 13 die Rede) mit ihren Südpolen auf einem Eisenring, der hohe magnetische Permeabilität (Durchlässigkeit) aufweist. Das heißt also, diese Polarität, die dort anliegt, wird von dem Material des Ringes 'geschluckt'. Das ist z. B. bei Weicheisen der Fall. Der ganze Ring wird selbst zum Südpol.

Allerdings liegen diese Stator Magnete nicht dicht an dicht, sondern zwischen allen Magneten ist eine Lücke. Die Stator Magnete selbst sind leicht gebogen, damit sie auf den Ring passen.

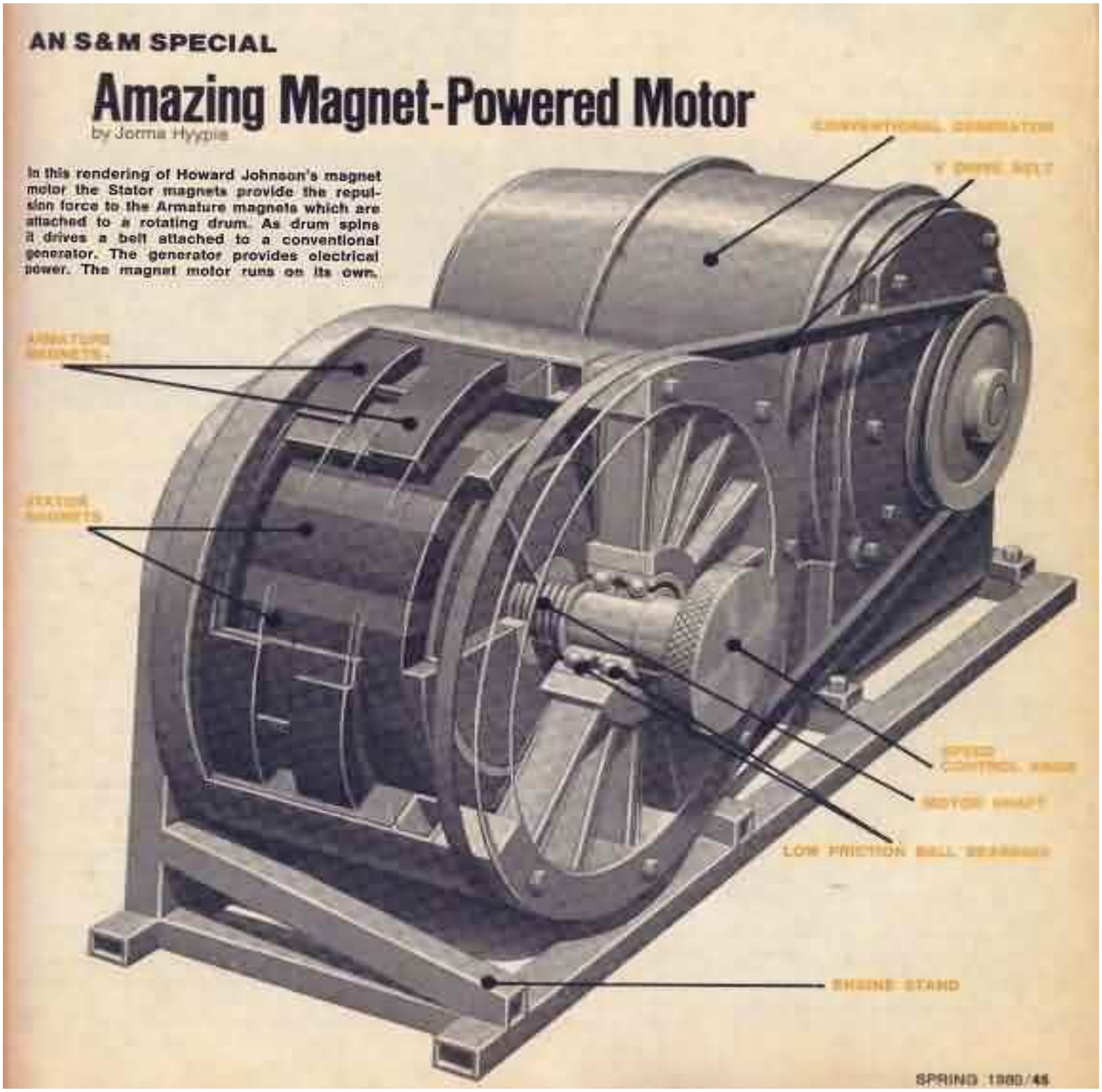

AN S&M SPECIAL

Amazing Magnet-Powered Motor

by Jorma Hyypia

In this rendering of Howard Johnson's magnet motor the Stator magnets provide the repulsion force to the Armature magnets which are attached to a rotating drum. As drum spins it drives a belt attached to a conventional generator. The generator provides electrical power. The magnet motor runs on its own.

SPRING 1980/45

Drei Armatur Magnete sind 3+1/8 inch lang und bogenförmig. und stehen in 120° Winkel um die Stator Magnete. Diese Armatur Magnete münden in die Armatur, die eine Rille für einen Keilriemen hat, für die Kraftübertragung. Die Armatur sitzt mit Kugellagern auf einem Schaft, der entweder in die Stator Einheit verschraubt oder draufgeschoben wird. Stop/Startschalter und Geschwindigkeitsregler könnten durch einfaches Bewegen in Richtung Stator oder weg davon erreicht werden.

Zwei oder mehr Armatur Magneten gestaffelt nebeneinander angeordnet, wie im Bild zu sehen, würde ein nicht akzeptables Pulsieren des Motors 'glätten', so Johnson. Johnson meinte, daß bogenförmige Magnete mit scharfen und nach hinten abgerundeten Ecken wichtig sind, weil sie die magnetische Energie viel besser konzentrieren und festhalten als stumpf endende Magnete. Diese Magnete sind etwas länger als die Länge von zwei Stator Magneten plus dem Zwischenraum. Alle Stator Magnete haben ihre Nordpole außen, Südpole wie gesagt innen, am Ring anliegend.

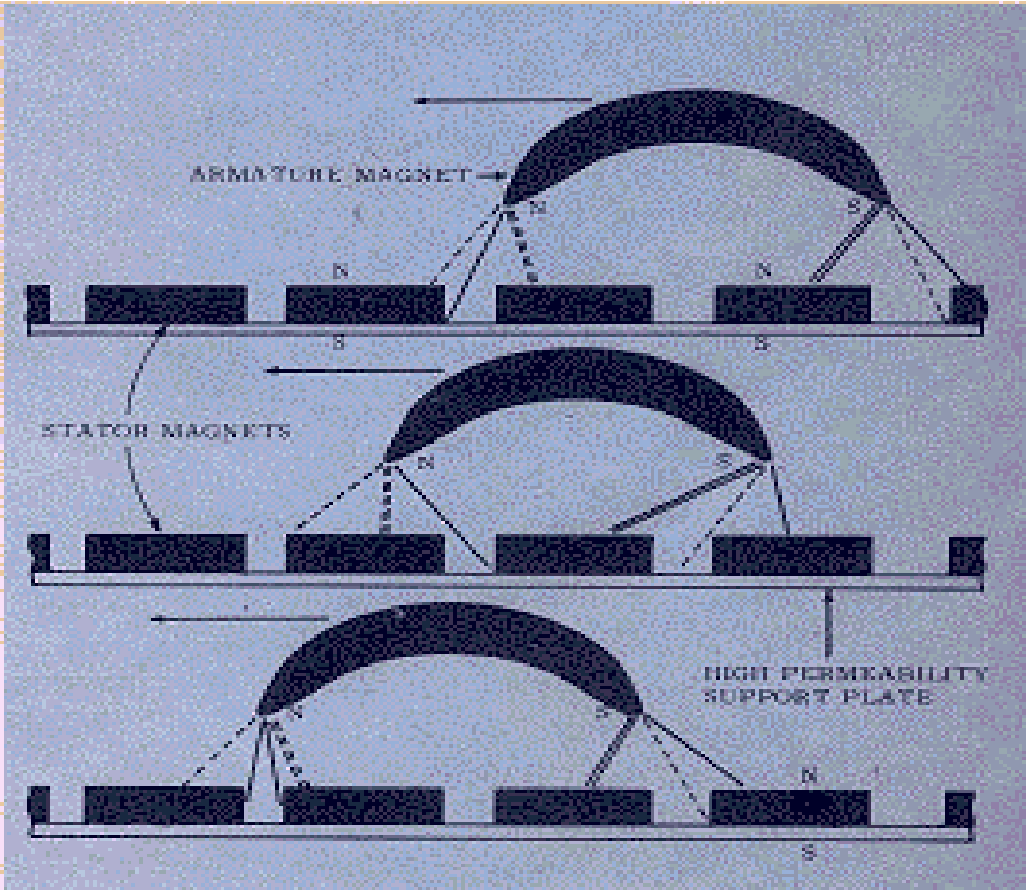

Wenn die Nordpole der Armatur Magneten über einen Statormagnet gehen, wird er abgestoßen von dessen Nordpol; und es gibt eine Anziehung, wenn der Nordpol über den Zwischenraum zwischen den Stator Magneten läuft. Wenn dagegen ein Südpol eines Armatur Magneten über einen Stator Magneten läuft, wird er angezogen und abgestoßen, wenn er über einen Zwischenraum läuft.

Alle Stator Magnete haben ihre Nordpole außen, Südpole wie gesagt innen, am Ring anliegend.

Wenn die Nordpole der Armatur Magneten über einen Statormagnet gehen, wird er abgestoßen von dessen Nordpol; und es gibt eine Anziehung, wenn der Nordpol über den Zwischenraum zwischen den Stator Magneten läuft. Wenn dagegen ein Südpol eines Armatur Magneten über

einen Stator Magneten läuft, wird er angezogen und abgestoßen, wenn er über einen Zwischenraum läuft.

Die verschiedenen Magnetkräfte spielen eine sehr komplexe Rolle, die Zeichnung zeigt einige der fundamentalen Verhältnisse. Normale Linien sind Anziehungskräfte, gestrichelte Linien stehen für Abstoßkräfte und doppelte Linien stellen dominierende Kräfte dar.
Wie die obere Graphik (links) zeigt, wird der führende Nordpol der Armatur Magnete von den Nordpolen der zwei benachbarten Stator Magnete abgestoßen. (linke gestrichelte Linien) Doch sind in dieser Position der Armatur Magnete die zwei Abstoßkräfte nicht identisch; die stärkere der zwei Kräfte überpowert die andere Kraft und bewegt die Armatur nach links. Diese Linksbewegung wird verstärkt durch die Anziehungskraft zwischen dem Nordpol des Armatur Magneten und dem Südpol des Stator Magneten am Boden des Zwischenraumes zwischen den Stator Magneten. (normale Linie)

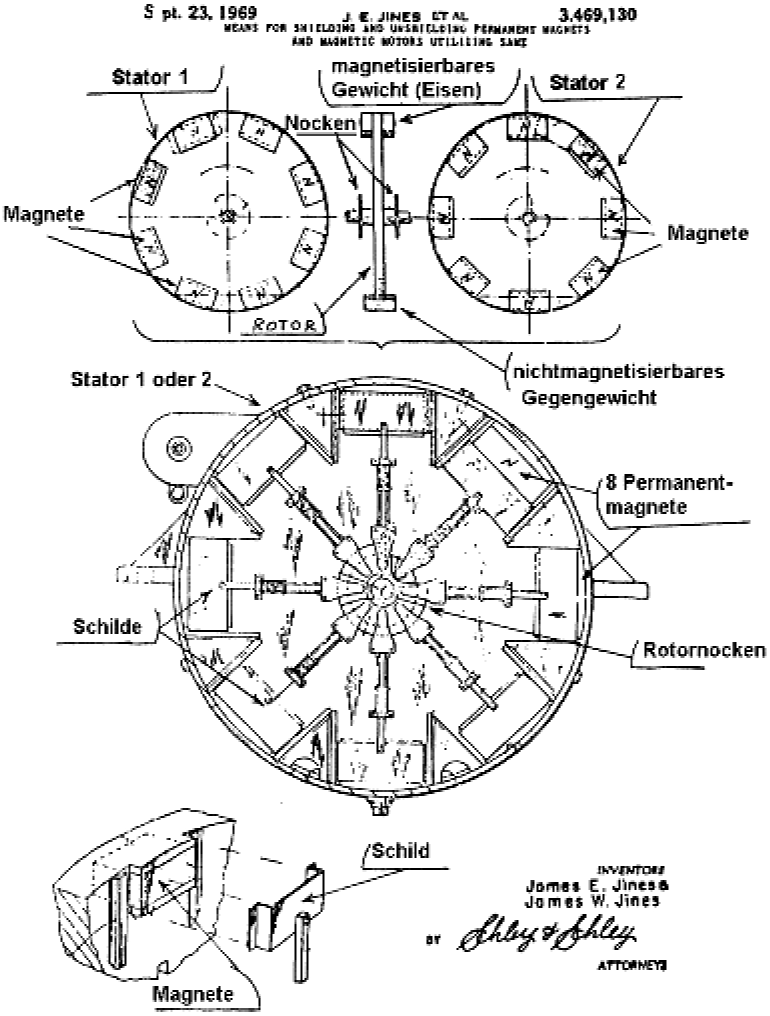

Doch das ist noch nicht alles. Nun, was passiert am anderen Ende (Südpol) des Armatur Magneten? Die Länge dieses Magneten (ungefähr 3+1/8 Inch) ist in Abhängigkeit von zwei Stator Magneten und deren Zwischenraum so gewählt, daß wieder die Anziehung-/Abstoßungskräfte so wirken, daß die Armatur Magnete nach links bewegt werden, bzw. beim Motor mit Drehbewegung links herum. In diesem Fall wird der Südpol des Armatur Magneten von den Nordpol-Oberflächen der benachbarten Stator Magnete angezogen, jedoch stärker, wegen der entscheidenden Armatur Dimensionierung (doppelte Linie). Die Armatur wird infolgedessen nach links gezogen. Das überpowert den schwächeren 'Zugeffekt' der Stator Magnete nach rechts.
Die Wichtigkeit der richtigen Dimensionierung der Armatur Magnete kann nicht genug betont werden. Ob sie nun zu kurz oder zu lang sind, das könnte einen unerwünschten Gleichgewichtszustand schaffen, daß die Bewegung abwürgen würde. Dabei spielen die unterschiedlichen Flußdichten an den Polen der Armatur Magnete eine Rolle. Das Beste ist, alle Kräfteverhältnisse zu optimieren, um größtmögliche Außerbalance-Verhältnisse zu schaffen. Wenn einmal die Armatur in Bewegung ist, hilft der Schwung sie in den Einflußbereich der nächsten zwei Magnete zu befördern, wo sie deren Druck- und Zugkräfte ausgesetzt ist, und so weiterbewegt wird.

Textquellen: http://www.newebmasters.com/freeenergy/index.shtml

Textquellen: http://www.delphion.com/patlist?icnt=US&patent_number=4151431&x=32&y=5

Beim Magnetmotor von Jines und Jines von 1969 werden nur magnetische Anziehungskräfte angewandt, keine Abstoßkräfte. Die obere Zeichnung zeigt zwei Statoren und einen Rotor. An jedem Stator sind Dauermagnete fest angebracht, wobei immer die Nordpole dem Rotor gegenüberliegen. Der Rotor besteht auf der einen Seite aus einem hochmagnetischen Teil (wie z. B. Weicheisen) und auf der anderen Seite aus einem nichtmagnetischen Gegengewicht, sowie aus zwei Nocken, die an den beiden Seiten des Rotorschafts befestigt sind.

Die Magnete auf der einen Scheibe sind etwas versetzt gegenüber denen der anderen Scheibe angeordnet. Dadurch kann der Rotor in jeder Position von den Magneten der beiden Scheiben angezogen werden.

Durch Schilde, die jeden Magneten abdecken, außer denjenigen, an dem gerade der Weicheisenkern des Rotors vorbeiläuft, wird gewährleistet, daß die abgedeckten Magnete keine magnetische Wirkung auf den Rotor ausüben. Diese Schilde bestehen ebenfalls aus Weicheisen (mittlere und untere Zeichnung). Dieser Vorgang wird durch die Nocken gesteuert, wobei dasjenige Schild herabgezogen wird, an dem der Weicheisenkern des Rotors gerade vorbeiläuft.

Alle Magnete sind also bedeckt, abgeschirmt, außer dem, der gerade kurz vor dem Eisen des Rotors liegt und somit den Rotor zum Drehen bringt. Sobald der Rotor vorbeigezogen ist, wird dieser Magnet sofort wieder abgedeckt, und der nächste Magnet wird frei, wobei der Rotor seine Drehbewegung fortsetzen kann.

5.1.0.8. Myers, Keith; US patent application 20050189927; September 1, 2005;

A resonant capacitive discharge motor

Two capacitors and at least one inductor are used to create an alternating magnetic field for use in electric motors. Charge leaving one capacitor passes through the inductor, creating a magnetic field, and is captured by the second capacitor. Energy is added to the second capacitor which is then discharged through the inductor to the first capacitor, creating a magnetic field of opposite polarity as that created by the first discharge.

BACKGROUND OF THE INVENTION

[0001] 1. Field of the Invention

[0002] This invention is related in general to the field of electric motors. In particular, the invention consists of a highly inductive electric motor driven by capacitor discharge.

[0003] 2. Description of the Prior Art

[0004] In U.S. Pat. No. 3,890,548, Edwin V. Gray discloses a pulsed capacitor-discharge electric engine. Gray introduces the concept of charging capacitors and using the stored energy from the capacitors to drive an electric motor to develop considerable torque through the magnetic repulsion action of rotor and stator cores wound with coils. Capacitors are discharged synchronously through these cores utilizing a control mechanism to position discharge elements. Discharge overshoot or back e.m.f. from the collapsing magnetic field in the coils is used to charge external batteries for conservation of power.

[0005] Gray's rotary electric machine is believed to operate on the principle of conservation of energy. Once rotation occurs, electric current is needed only at the instant of a capacitor discharge in order to advance the rotor.

[0006] An important aspect of Gray's invention is that two banks of capacitors are utilized; one to energize the stator coil and one to energize the rotor coil. Additionally, all the electric charge discharged from the banks of capacitors must be collected and either dispersed as waste energy through resistors or collected and sent to the batteries. This requires that a large amount of current pass through the discharge circuit. During the process of collecting this discharge energy, a large amount of the energy is lost. Additionally, the banks of capacitors must be fully recharged before the next discharge cycle. One additional aspect of Gray's invention is that a special motor must be designed and built to take advantage of his concept. Accordingly, it would be advantageous to have a circuit, similar to that disclosed by Gray, with the capacity to reuse a significant portion of the charge without requiring that it be sent back to the battery. Additionally, it would be advantageous to have a capacitor motor-driver circuit that energizes only the stator coil, rather than both the stator and the rotor. It would also be advantageous to have a capacitor-discharge motor circuit that works with electric motor designs that are common in the industry.

[0007] J. Snell has previously disclosed a variation of the Gray capacitive discharge, as illustrated in FIG. 1. Four motor coils are represented by the inductive circuit elements T1, T2, T3, and T4. Four capacitors, C1-C4 (respectively) are utilized to drive the four motor coils. Four switches and numerous diodes are utilized to establish the timing necessary to ensure the motor continues to rotate.

[0008] Initially, a charge is placed on C1. Switches are aligned to allow C1 to discharge through T1 and place a portion of its original charge on C3. A counter electromotive force is passed to C2. Additional switches are closed, allowing C3 to discharge through T3. This secondary discharge, while smaller than the original discharge through T1, provides some additional torque. In this manner, the residual energy captured by C3 is used to provide power to the motor. However, no provision is made to bring the charge of capacitor C3 to the level initially obtained by C1. Therefore, the amount of torque which may be supplied to the motor is significantly less during the secondary discharge than that available during the primary discharge. As with the Gray motor, Snell's invention requires that a special motor be designed and built to take advantage of his circuit, i.e., a motor having at least four coils that are electrically separate from each other. It would be advantageous to design a motor driver circuit that can take advantage of electric motors common in the industry. Additionally, it would be desirable to have a capacitor discharge motor driver circuit that provides a consistent level of torque during each discharge cycle.

SUMMARY OF THE INVENTION

[0009] The invention disclosed herein utilizes two capacitors to drive a single motor phase winding or coil. During the first half of a cycle, a charging circuit charges the first capacitor to a voltage level set by a switch control circuit. The control circuit and mechanical or solid-state switching devices are utilized to discharge this capacitor through a motor coil when the rotor is at an appropriate angle with respect to the coil. Electric charge flows through the coil, forming a first magnetic field, and is collected on a second capacitor. The formed magnetic field creates an attractive force between a second magnetic field produced by a magnet or a member made of high magnetic permeable material that is mounted on the motor shaft.

[0010] The motor coil is energized by the discharging capacitor which creates a torque pulse on the motor shaft and causes the shaft to spin. In this way, energy is transferred from the first capacitor to the first magnetic field, and then to the shaft to provide mechanical energy. Energy not used by the motor is transferred to the second capacitor. The charge collected on the second capacitor is retained on the second capacitor by the switching devices and the rotor shaft continues to rotate freely.

[0011] Remaining residual charge is drained from the first capacitor and a portion of the charge is used by the charging circuit to assist in charging the second capacitor to the preset voltage level. The control circuit and switching devices are then used to discharge the second capacitor through the same coil to the first capacitor. The direction of current from the second discharge is such that the resulting magnetic field has a polarity opposite to that created by discharging the first capacitor. When performed at the correct time, the second discharge is also used to produce an attractive force between the first magnetic field and the second magnetic field produced by a magnet or a member made of magnetic material mounted on the rotor shaft, thus providing additional torque that may be converted to mechanical energy by the shaft.

[0012] Once this second discharge has occurred, the residual charge remaining on the second capacitor is drained and a portion of the charge is used by the charging circuit to assist in charging the first capacitor and the cycle begins again.

[0013] An important aspect of this invention is the dual capacitor circuit used to energize a single coil, producing an alternating magnetic field. The coil is energized when the shaft is at an appropriate angle with respect to the coil. After the receiving capacitor has collected the energy from the discharge, it is charged to a predetermined voltage level by the charging circuit. In this way, the collected energy is available for immediate reuse by the device and the charging circuit needs only to replace the energy consumed during the discharge in order to maintain shaft rotation. Additionally, the energy available for conversion to mechanical energy is consistent during each discharge cycle.

[0014] Another advantage of this invention is that it can be implemented using brushless direct-current permanent-magnet motors and switched-reluctance motors common in the industry. In particular, the phase winding, or phase, of a single-phase switched-reluctance motor is connected between the two capacitors. On a polyphase switched reluctance motor, each phase and the switching devices are connected between two capacitors. The two capacitors for each phase and the switching devices are separate from the capacitors connected to the other phases and switching devices. The phase(s) of a permanent-magnet motor is energized in the same way as for the switched reluctance motor except that the control circuit must charge and discharge the appropriate capacitor in order for the magnetic field of the phase to attract the magnetic field of the magnet.

[0015] Various other purposes and advantages of the invention will become clear from its description in the specification that follows and from the novel features particularly pointed out in the appended claims. Therefore, to the accomplishment of the objectives described above, this invention comprises the features hereinafter illustrated in the drawings, fully described in the detailed description of the preferred embodiments and particularly pointed out in the claims. However, such drawings and description disclose just a few of the various ways in which the invention may be practiced.

BRIEF DESCRIPTION OF THE DRAWINGS

0016] FIG. 1 is a schematic of a dual capacitor/single-inductive-coil capacitor discharge electric motor system in accordance with the invention, wherein the alternating switching of capacitor discharges is mechanically controlled utilizing gears and commutated brushes.

[0017] FIG. 2 is a schematic of a preferred embodiment of the invention utilizing silicon controlled rectifiers to control the alternating switching of the capacitor discharges.

[0018] FIG. 3 is a schematic, according to the invention, utilizing multiple inductive coils and silicon controlled rectifiers to control the alternating switching of the capacitor discharges.

DESCRIPTION OF THE PREFERRED EMBODIMENTS

[0019] This invention is based on the idea of utilizing a pair of capacitors connected in series with an inductive electric-motor coil, a voltage source, diodes, and one or more switching devices. The arrangement of these elements creates an alternating flow of electric current through the coil, wherein the timing of the electric current alternation is controlled by the switching devices. Electric charge from a discharge capacitor passes through the motor coil and is collected by a receiving capacitor. The receiving capacitor is then charged by the voltage source to replace any energy consumed in the first discharge. The switching device alternates the flow of electric current, which is discharged back through the motor coil. By capturing charge which has already passed through the motor, this arrangement reduces the amount of electrical energy needed to drive the motor.

[0020] Referring to the figures, FIG. 1 is a schematic illustration of a capacitor-discharge electric-motor system 10 that includes a switch control circuit 12, a voltage source 14, a motor coil 16 (represented as an inductor), a rotating shaft 18 on which magnetic material 19 is mounted, a shaft position sensor 20, a first capacitor 22, and a second capacitor 23. In this embodiment of the invention, diodes 24, 25, 26, and 27 are used in conjunction with a geared switch 28 to control the timing of capacitor discharges.

[0021] The switch control circuit 12 accepts input from a voltage-level-command line 30 and the shaft-position sensor 20 to control the operation of the voltage source 14. It is important that the operation of the voltage source 14 be properly controlled by the switch control circuit 12 to ensure proper timing for charging the capacitors 22,23. A capacitor drain circuit 31 is directed to remove residual charge from the capacitors 22,23 at the appropriate time. The drained residual charge is returned to the voltage source 14 where it is converted to a higher voltage level for re-use in charging of the capacitors.

[0022] Every two rotations of the shaft 18 is referred to as a cycle and requires two similar, but opposing, events. The first half of a cycle includes draining residual electric charge from the second capacitor 23 and returning it to the voltage source 14. Simultaneously, the voltage source 14 charges the first capacitor 22 through the first charging diode 24. This simultaneous charging of the first capacitor 22 and draining of the second capacitor 23 maximizes the electric potential between the capacitors.

[0023] The switch 28 is mechanically connected to a gear on the rotating shaft 18. In this embodiment of the invention, the ratio of the motor-shaft gear to the switch gear is 4 to 1, i.e., for every rotation of the shaft 18, the geared switch 28 advances 90 degrees. Once the first capacitor 22 is fully charged, the geared switch 28 advances so that a conducting path exists from the first capacitor 22, through the first discharge diode 25, and through the motor coil 16, to the second capacitor 23.

[0024] The motor coil 16 is constructed in such a way as to be a highly inductive electrical element. Electricity flowing through this coil creates a magnetic field that stores the energy discharged by the first capacitor. The magnetic field created by the motor coil 16 attracts the magnetic material 19 on the shaft 18, resulting in a torque pulse on the shaft 18 for the duration of the discharge. The mechanical energy imparted to the shaft 18 can be harnessed by devices attached to it. However, a measure of mechanical energy is retained by the shaft 18 so that it can continue to rotate.

[0025] Initially, the electric potential of the energy stored on the first capacitor 22 is higher than that of the second capacitor 23 (the second capacitor having been drained to a minimum voltage). When the first capacitor 22 begins discharging through the induction coil 16, its stored electric energy is used to create the magnetic field. In this manner, energy is transferred from the first capacitor to the magnetic field of the coil. Mechanical loads attached to the shaft 18 absorb some of the energy stored in this magnetic field. Energy not utilized by the mechanical load is transferred to the second capacitor 23 as the magnetic field collapses. The result is that the electric potential of the energy stored on the second capacitor 23 is now higher than that remaining on the first capacitor 22. The first discharge diode 25 and the current position of the geared switch 28 prevents the second capacitor 23 from discharging back through the electrical path to the first capacitor 22. As the shaft 18 continues rotating, the geared switch 28 advances so as to break the electrical path initially used to discharge the first capacitor to the second capacitor.

[0026] During the second half of a cycle, any residual charge left on the first capacitor 22 is drained by the capacitor drain circuit 31. Simultaneously, the voltage source 14 charges the second capacitor 23 through the second charging diode 26. In this manner, the electric potential between the two capacitors is maximized. The second capacitor is charged to a level dictated by the voltage level command 30 while the geared switch 28 continues to advance. When the geared switch 28 advances sufficiently, it creates an electrical path for discharging the second capacitor 23, through the coil 16 and the second discharge diode 27, to the first capacitor 22.

[0027] The second discharge diode 27 prevents the first capacitor 22 from discharging back through the established electrical path to the second capacitor 23. The switch control circuit 12 directs the capacitor drain circuit 31 to drain the residual charge from the second capacitor 23 while the voltage source 14 charges the first capacitor 22. The first capacitor 22 is charged to a level dictated by the voltage-level-command line 30 while the geared switch 28 continues to advance. When the geared switch 28 advances sufficiently, the first capacitor 22 is once again discharged.

[0028] In this manner, the process of discharging the first capacitor 22 is repeated. However, the voltage source 14 need only replace the energy consumed during each discharge cycle. This process reduces the amount of energy required to maintain rotation of the shaft 18 and provide torque which is utilized by mechanical loads attached to the shaft 18.

[0029] Assuming that the electric energy discharged between the two capacitors 22,23 is approximately equal in magnitude during each half of the process, the power available to any mechanical load will be relatively constant. One advantage of the present invention is that a single coil is utilized to provide energy to the shaft 18 twice during each rotation of the motor shaft 18.

[0030] In another embodiment of the invention, as illustrated in FIG. 2, the mechanically geared switch 28 present in the first embodiment 10 is replaced with silicon controlled rectifiers (SCRs) 128,129. The capacitor discharge electric motor system 110 includes a switch control circuit 112, a voltage source 114, an inductive motor coil 116, a motor shaft 118, magnetic material 119, a shaft position sensor 120, a capacitor drain circuit 131, a first capacitor 122, and a second capacitor 123. Charging diodes 124 and 127 are used in conjunction with SCRs 128,129 to control the alternating discharge of the capacitors 122,123.

[0031] The switch control circuit 112 accepts input from the voltage-level-command line 130 and the shaft-position sensor 120 to control the operation of the voltage source 114, the capacitor drain circuit 131, and the SCRs 128,129. The first half of the cycle corresponding to the rotation of the motor shaft 118 includes draining residual electric charge from the second capacitor 123 while charging the first capacitor 122 through the first charging diode 124.

[0032] Once the first capacitor 122 is charged to a level dictated by the voltage-level-command line 130, the switch control circuit 112 activates the first SCR 128 to create an electrical path from the first capacitor 122, through the first SCR 128, through the motor coil 116, and through the first discharge diode 125, to the second capacitor 123. During the second half of the cycle, the switch control circuit 112 directs the capacitor drain circuit to drain the residual charge from the first capacitor 122 while the voltage source 114 charges the second capacitor 123 through the second charging diode 127. Once the second capacitor is charged to a level directed by the voltage-level-command line 130, the switch control circuit 112 activates the second SCR 129 to create an electrical path for discharging the second capacitor 123, through the second SCR 129, through the coil 116, and through the second discharge diode 126, to the first capacitor 122.

[0033] Another embodiment of the invention utilizes a plurality of inductive coils, as illustrated in FIG. 3. The capacitor discharge motor system 210 is similar to that of FIG. 2, but contains two inductive coils 216,217. Current discharges through the coils 216,217 are controlled by the switch control circuit 212 and the SCRs 228,229.

[0034] Those skilled in the art of making electric motors may develop other embodiments of the present invention. For example, an electric motor may contain multiple capacitor discharge coils similar to the one described herein and illustrated by FIG. 3. For example, three inductive coils may be utilized with three capacitors wherein the first inductive coil connects the first and second capacitors, the second inductive coil connects the second and third capacitors, and the third inductive coil connects the third and first capacitors.

[0035] The terms and expressions which have been employed in the foregoing specification are used therein as terms of description and not of limitation, and there is no intention in the use of such terms and expressions of excluding equivalents of the features shown and described or portions thereof, it being recognized that the scope of the invention is defined and limited only by the claims which follow.

III.) Teil Magnetic NOT Electric could be the future

6.0.0.1. Magnetron, Fusion Magentic Motor

by Gerald Orlowski

Presented at the 3rd International Symposium on New Energy, April 25-28, `96 at Denver, CO.

Scientists from Descartes to Einstein sought to find the correct DESCRIPTION of the NATURE of all physical substance.

I believe Rory Johnson was one of the greatest visionaries of this century, and his operating Magnatron Fuel Cell motor was showing us the principle of attract-attract in motion - the nature of all physical substance.

Rory Johnson designed and operated a 525 HP fuel cell motor without any of the hardware that is presently used in current state-of-the-art electric motors, such as AC Induction series or compound wound DC motors which use the accepted principle of attract-repel, an energy form that doesn't utilize the magnetic field to its greatest advantage. He capitalized on the magnetic field to its greatest advantage by utilizing the principle of ATTRACT-ATTRACT.

There is no way to explain ATTRACT-ATTRACT using contemporary electrical theory, how his relatively small motor could produce this tremendous horsepower. Over the past 10 years, I used the Johnson hardware as a textbook to help gain an understanding about this NEW electrical-magnetic energy theory. Johnson capitalized on the magnetic field to its greatest advantage. He used a top and bottom rotor in his motor. First, the top rotor attracted, released, then the bottom rotor attracted, released. The action of attract, taking place between upper and lower magnets, using the windings to complete the attract field.

THIS ACTION is difficult to understand if present electrical theory is the knowledge base. I know this to be true because I listened to a teaching tape by Rory Johnson, and my mindset about electricity would not let me HEAR him. Surely as electricity was caused to be generated by ONE of the windings, the other winding used it. How else could it work? The answer to his statement that he RECYCLES a stabilized energy could not be understood if he somehow TAKES APART and then RE-ASSEMBLES the electron itself, UNBELIEVABLE!

Yes, Dr. Johnson was showing the world the `Principle of Motion" that had been sought by scientists from Descartes to this day. This is ATTRACT-ATTRACT.

Many `scientists of old' tried to say if the electron GETS FORMED, then it MUST have a core structure. For example, Dr. Heaviside stated the following, "As the Universe is boundless in one way toward the great, so it is equally boundless to the other way, toward the small; and important events may arise from what is going on in the inside of atoms, and again in the inside of ELECTRONS. How electrons are MADE has not yet been fully understood."

This subject is covered in greater depth later, but for now let us review my involvement with Rory Johnson and his 525 HP from Laser (Defraction Prism) Activated Motor that had a range of 100,000 mi. Operating on 2 lbs of deuterium and gallium.

After I saw the Magnatron motor, my life changed. I was no longer a happy camper working by myself in a wonderful, fully equipped research machine shop for the Greyhound/Armour Corp. In Arizona. While on a business trip, I saw this motor running in the showroom at the Magnetron Co. Located in Elgin. IL.

During my 15 years of electric motor repair, among the hundreds of motors I repaired, I rewound a 500 HP electric motor. That motor had wires exiting it that were the size of a garden hose. The Johnson motor being shown had NO wires. Surely this motor was unreal, a con-job to get money for dealerships. Yes, there he was. Rory Johnson standing next to his sealed self- contained Electric motor.

Upon returning to the Greyhound Towers and telling them what I had seen, they instructed me to call Mr. Johnson. Greyhound wanted Johnson to put forth a plan to install a motor in one of their buses for testing purposes.

I called Johnson. He was delighted that a Greyhound employee had seen the motor running, and replied that the testing idea was acceptable. He would set a time frame for just when a bus should be delivered to him.

Two years went by, with no business proposal from Johnson. Then, his former business partner, Mike Marzicola, called to say Johnson had passed away. He wanted me to work with him to get one of the motors running. I flew to Orange Co., CA, saw the motor took pictures, and put forth a plan to Greyhound. Subject to a contract with Marzicola, one of the old worn motors would be brought to the research shop. I would then very carefully reconnect the generator wires that Johnson had cut off prior to moving from Elgin, IL to CA.

Discussions with Marzicola brought out that the US government (given the authority by the Congress of `52) had issued a GRAB order to take Johnson's motors. Rumor has it, the DOE is run by US oil companies, and OPEC and they want no competition, period. Because of this grab order, Johnson had cut the generator wires then put his `total shop', with motors and all, on several U-Haul trucks and left Illinois in the middle of the night and went to Calif. To re-establish his business, but before he could get a motor running, he passed away.

Surely, greyhound would agree to let me re-start one of Johnson's motors. The wonderful proposal put forth to greyhound was rejected by mail. Very agitated, I went to the top office at Greyhound demanding an explanation. I was met at the door with the comment, "We know why you are here." Knowing the potential savings to the bus company, surely they could have only one reason for rejecting the proposal. They must have believed I was not qualified to start up the motor.

The top legal advisor stated he was present when the Greyhound board met and discussed my written proposal. He stated the following, "At NO time was the thought put forth that you would not succeed. In fact, we discussed all of the hardware designed and constructed by you, and started the conversation from what happens when Greyhound has a running motor". We contacted a State Rep. Who felt this motor should not be allowed to be used in 4,000 + buses. The loss in tax dollars for fuel alone would be a very huge sum. He then asked me to leave, stating he was sorry that he had to tell me the reason the plan was rejected.

Telling Marzicola of the rejection, I offered to personally put in a few thousand dollars toward the parts to get one motor running. In return, I would be assigned the dealership for the Phoenix Metropolitan area. We signed legal papers in exchange for the money agreed on, and went to work. (I still have the signed dealership.)

The first thing I noticed was that someone had been working on repairing the motors. Three motors already had new commutator assemblies installed. Each assembly consisted of 3 commutator assemblies on one insulated tube with a metal case to secure it to the shaft.

One motor still had the old worn commutator assembly, as it had not yet been repaired. Out of curiosity, I took a string, held it to the center of the top shaft and stretched it to one of the stationary magnets on the motor not yet repaired. This winding was uniquely different from anything I had ever seen. After winding probably a hundred armatures of all sizes (during my early motor repair years), I never saw mica between bars as thick as what Johnson used -1/8' thick. By turning the rotor and holding one brush in place, it was easy to se that the brush sent energy into one commutator bar just as the TWO wire SLOTS arrived in front of one magnet (let's say north). The mica thickness supplied OFF TIME before the next bar contacted the brush and the SAME WIRE SLOT now moved in front of a south magnet. The mica thickness was not just for insulation but to control the movement when the slot of wire arrived at another magnet.

The newly installed commutator had insulation between bars that was so thin i could hardly see it, I asked Marzicola who had supplied these new commutators. He said, " I ordered them and have a large supply in the store room." He said the thickness of the mica had to do with the voltage, and this unit operated on less than 50 volts. The makers of the commutators simply went by the VOLTAGE requirement given them. They were not permitted to see the actual motor. I tried to explain to Marzicola that with the thicker mica it afforded OFF-TIME, to gain an instantaneous polarity reversal from one rotor coil to its mating coil on the other rotor. He said if I wanted to help him, I should stop making trouble, the commutators were PERFECT. He insisted we work together to finish one of the rotors that already had a new commutator installed. It seemed to me that we were defeated before we started. Unfortunately, my observation proved to be accurate.

Years later, I still pondered how this OFF-TIME could have accomplished more than just this instantaneous polarity reversal. Faraday had a great teaching on this subject, he stated, "When a current suddenly ceases, it can INDUCE a current IN THE SAME WIRE which is stronger than the original current. Thus, by conservation of force, there must be some force present, AN OPERATIVE, other than electric force. This force is probably the MAGNETIC FORCE." Science had this enlightening teaching over 150 years ago! Unbelievable!

Back to Johnson's motor. There were two separate windings, the driver rotor on the bottom, and the generator winding on top. A curved piece of metal that closely resembled aluminum (but did not drill like aluminum) was secured for 360 degrees around, centered between the two windings. This metal most definitely was a conductor of electricity. There were 52 small holes drilled, equally spaced, around the center of this curved metal (possibly magnesium). These holes were sized to be a snug fit to the #23 wires from The generator winding coils.

My electrical background deduced that these wires must certainly malfunction by being GROUNDED to the curved metal. To just solder extension wires to the cut-wires at the inside location would be a POOR repair job. I convinced Marzicola that we must do a good job. We would carefully pull the generator wires back to the outer surface, number them and replace them through the same holes. Only this time we would use insulation tubing.

Marzicola said they already thought of that, but insulation tubing wouldn't fit along with the wires. I told him that by holding a piece of copper tubing (as a safety guard) between the windings, I could position a drill directly in each hole and enlarge it. Then we could insert tubing with the #23 wire inside. We did just that.
After two days of hard work, we had all the generator wires connected to the commutator. None were grounded to this metal; it was a perfect ELECTRICAL circuit path. We had just negated the action of Johnson's Fuel cell. Why?

The 1/8" copper pipe that exited his fuel cell was positioned in such a way as to be secured to the inside surface of the housing with the "end flow point" directly across from the center of this metal. ALL of the fuel cell generated power became captured in this curved metal (located between rows of permanent magnets above and below).
The metal was designed to feed energy directly into each generator wire that was in direct contact with the metal. The modest pulse from the generator coil served the purpose of a catalyst to cause this energy to join in the flow to the Commutator and on to the lower winding. This metal was like a massive capacitor, and we did a great job of disconnecting it with insulation tubing.

Why go through all this? We will never understand how the Johnson motor functions without the firm understanding of the characteristics of this energy. We must think MAGNETIC not ELECTRIC.

Electrical knowledge won't help us construct the Ro-Mag unit. For example, can this same FORM of energy be released inside a motor without an energy piping system to put the energy someplace? Why not release the energy at the location where it is actually needed?

The Johnson motor has the fuel cell located directly in the heart of a massive magnetic field, where it PULSES as needed, to feed the Unit's RELEASED MAGNETIC POWER. So what is different between these two energy FORMS? As we know, electrical flow argues, that is, it sparks, short circuits, and must be CAREFULLY insulated, Magnetic structures, rather, want to SHARE their flow, and are compatible to the Universal Force. This new energy FORM responds when it is needed as well as HOW it is needed, manifesting as a MEASURABLE current.

Thus, in defining these different energies, it is important to understand that although electrical and magnetic (energy) work with similar ATTITUDES, the MANNER in which they work, sets up a differing energy effect. THINK MAGNETIC THINK MAGNETIC. Let us have a short magnetic school.

QUESTION: Does magnetism have a pulse rate? Do not say "no," because if it does, then much of what is called phenomena will be self-explained.

QUESTION: Does CHANGING a pulse change the polarity which also changes the intensity?

WHY ASK THESE QUESTIONS?
Because this is HOW present electrical theory took its present place, and when we were satisfied enough, we stopped asking questions.

QUESTION:
In the field of magnetism would alternating the magnetic attract become a FUNCTION of this energy? WHY ASK? Why do we have alternating electrical currents? Well, ask the same about magnetic energy.

Judging from the present day electrical theory, magnetic energy is now relegated to being a by-product that is unnecessary or of NO USE. This is like saying a chicken is OK, but throw the eggs away. Why can what it is--it is only a by-product.
QUESTIONS: Is the energy now called electricity a VIOLENT MAGNETIC REACTION o the troubling or interferences in its field that is simply then manifested as SPARK?

This being so, is electricity then the by-product of a troubled ....[hiccup in manuscript].... accept the fact that a solid-state device has been constructed for magnetic field? It most certainly is. THINK: All things considered does this show a unity of forces? The unit of force we are NOW discussing is Compressed Magnetism (wrongfully called gravity). With gravity being compressed magnetism, there is only one force-magnetism. This force is CAPTURED by magnetic action inside the Johnson motor.

The coils in the Johnson Motor are charged and discharged. This action is called a COIL COLLAPSE TIMING because of the pulsing system that activates the energy flow inside Johnson's motor. As we understand that this ACTION is NECESSARY, we can construct other magnetic devices that function utilizing the same BASIC PRINCIPLE.

Let us now do a historical study about energy and how it relates to the construction of the Johnson Motor. The unit constantly recycles a stabilized Magnetic Electro energy. Is this statement in CONFLICT with past science teaching? Yes, it is; however, one scientist seemed to think otherwise. Dr. Lodge stated (about 1890) that. "Any form of ENERGY can be followed in TRANSFERENCE.' We say magnetic molecular structures are forming and reforming. If we drive a wire through a magnetic field, we TROUBLE the field, causing structures called electrons to form and flow. These electrons DO A JOB and discharge back into magnetic molecular structures having BASICALLY A NEUTRAL charge. Thus, hopefully at some point in time, we will be allowed to observe this transference action as Dr. Lodge stated.

We seem to be far off course. What happened?

We had a great scientific foundation, that is up until J.J. Thomson put forth his theory in 1890. Thomson identified the cathode rays as a building block of atoms and called them electrons. Until then, a good teaching was in place, the law of action and reaction.
What does one have to do with the other? Dr. Lorentz (about that time) stated that between radiating electrons,, the law of action and reaction could not hold. He stated, "When a moving electron radiates it slows down, thus losing momentum. It is some time later before the radiation

hits other electrons. Thus, there can be no immediate reaction in other electrons to the creation of the radiating electron. And, all of the radiation will not be absorbed by electrons in hits, some will be scattered. Thus between ELECTRONS. The equality of action and reaction will not hold."

Scientists of OLD did not want to be burdened with the thought that an electron has a core structure. WHY? SAME REASON TODAY!! Because this thought then the mind to ask, "What holds he electron together?" Fifty years ago scientist, Dr. Ehrenhaft stated. "It is purely magnetic force which permeates throughout the known Universe." Did he conduct any tests to prove his statement? Printed in Nature, Jan 4, `41, Dr. Ehrenhaft stated, "There must also be a STATIONARY MAGNETIC FIELD in the beam of LIGHT with potential differences since SUPERPOSED MAGNETIC FIELDS
accelerate or retard the MAGNETO-PHOTOPHERISIS. It can be observed that some particles stay at rest and that their motion stops suddenly, or that moving particles appear to change their velocity, even reverse it due to changes of CHARGE. The movement of magnetic ions in a homogeneous magnetic field is a MAGNETIC CURRENT."

All of this same action could be happening inside the fuel cell of the magnatron. We could say Magnetism is the property that unlocks the molecular lock. Therefore, surely magnetism is also the property that holds all structures together (electrons included).

Just what is necessary to CAPTURE this magnetic current to PUT IT TO WORK? first, we want this energy to move about as MAGNETIC BUBBLES, and this can be accomplished while the Johnson fuel cell has a vacuum interior. Why pull a vacuum to Fuel Cell? On reason is to allow the bubbles to move freely and not break. Keep in mind that the effects of compressed magnetism (gravity) are greatly reduced and this downward force being somewhat alleviated, allows a certain kind of FREEDOM to the bubble flow. A MORE IMPORTANT reason is the magnetic energy in the fuel cell came about because of an assembly of DIFFERENT CHARGED PARTICLES. These particles need to maintain their IDENTITY as highly complex interactions take place within the fuel cell. If air were inside, it would tend to NEUTRALIZE these charges, a condition that would then interfere with the correct particle joining process.

SHOULD THE FUEL CELL LIGHT UP? In 1905 Einstein suggested, "light travels from EMITTER to ABSORBER in discrete particle-like BUNDLES." NO TOO BAD OF AN IDEA! If Einstein had finished the thought and said, "the bundles are composed of MAGNETISM AND LIGHT which travel SIDE BY SIDE, with there being NO light without the magnetism,"' he would have been accurate. Magnetism is a CONSTANT- it does not come from somewhere. BECAUSE it is already in place-everywhere. As a Vibratory change is caused to happen in magnetism, it then creates an ENERGY CHANGE that the human eye can see, visible matter called LIGHT.

SO WHAT HAPPENS AS THE LIGHT STOPS? When light is not needed any longer, it returns to its original form. It stops its manifestation of light while the magnetism continues manifesting as it always did.
Inside Johnson's motor, I saw a great display of light as magnetic charges moved from one place to another. This action of having the fuel cell LIGHT UP might help to further explain the "Unity of Forces," (if we allow our minds o expand).

MAGNETIC BUBBLES transport a MASSIVE AMOUNT of energy, yet this energy does not NEED to be circuited by HEAVY wire. Why not? Are we saying that magnetic energy is transferred primarily in the FIELD AROUND the WIRE? This must be true, Johnson used #23 wire, a wire size ordinarily used to operate an electric motor having less than a fraction of one horsepower. If this wire is equated to horsepower in present day motors, Then his motor COULD NOT WORK. I saw all the worn commutators, brushes and bearing. His motors undoubtedly ran for YEARS. Anyone could observe minimal wear on commutators, brushes, and other parts.

JUST WHAT KIND OF WORK CAN A MAGNETIC FLOW ACCOMPLISH? Back to the Magnatron Motor. Here is a sample of the magnet size and wire size. The same size as used inside Johnson's motor. His magnets, when magnetically charged could be designated as `weak' in flux power. These magnets, to respond with greater POWER required energy from his fuel cell. They then acted as CHARGING CAPACITORS with their ENERGY DISCHARGE setting up a given PULSE RATE, which created the action of RELEASE TIMING. And what did this do? This release timing element goes on to affect the revolutions. The revolutions affect the pulsing. The pulsing determines the input. The input determines the outlay of the magnetic current flow.

Yes, the magnets Johnson used had weak flux power, however, without the flux power, everything would be stationary. Yes, the flux power not only helps the released magnetic energy, it ENCOURAGES IT. Yet, it is not a MATTER OF FLUX POWER. It is a matter of TRANSMUTABILITY and this has to do with molecular structures.

Mr. Johnson stated that the FUEL is caused to work by blending Deuterium and Gallium. Scientists already had the NAME of the energy that it manifests as these two elements are blended. Johnson used a spark energy that became focused after going through a dark, smoky defraction prism. The scientists were convinced that Johnson could not produce THEIR already named, newly discovered energy FORM with a MINIATURE cold fusion fuel cell small enough to fit inside his motor. This was their position, and they never wanted a challenge to the teaching they spent YEARS memorizing.

CONFUSION-CONFUSION! IS WHY WE HAVEN'T ADVANCED IN THIS TECHNOLOGY! Newton's law states, "A change in substance is a change in molecular structure."

As we focus on the thought that there is nothing BUT energy which manifests as magnetic molecular structures constantly forming and reforming, just using the words, "a change in substance" has no application. All processes go through a process of forming and reforming. THEN, any given visible substance could be perfectly reproduced, isotropic in every respect, yet be the product of DIFFERENT MOLECULAR STRUCTURE.

SO WHERE IS THIS THOUGHT LEADING US? Each electron has an identifiable core structure of its own which can be identified as its place of origin. Today, electrons are FORMED at the Earth's energy zone, the ionosphere.
HERE IS A FULL SIZE ISOMETRIC VIEW OF THE FUEL CELL INSIDE THE UNIT. Why is this center acrylic tube called a Fuel Cell? The action accomplished inside this unit could be used to expand the name to a Molecular Vibratory Exchanger Unit.
Why call it by this name? What is it exchanging? It is exchanging the matter (liquid) into a pure energy form.

Q. Why go into the details of this magnatron motor? A. To make sure this very significant technology doesn't get buried in a dead-end file. If the the human species is to survive, the fossil fuel extravaganza must be curtailed and magnatron motors can take its place.

What is vibrating? Vibrations come off both magnets from below the FUEL CELL and cause a SOUND OF VIBRATION as magnetic waves BOUNCE off the energy field that is already inside the vacuum chamber. This action sets up a given RESONANCE.

SOUND TURNS INTO WAVES but the magnetic energy comes out as PULSES. THIS ACTION gives a vibratory change to the structure of the liquid. This is all a random action; however, the RANDOMNESS IS THE DESIRED ORDER.

Next, we note that the energy wants to escape without doing work. WHAT IS Magnetic work? We want the molecular structures to be used to their maximum potential. This only gets accomplished as we CAUSE a "molecular break-down" by circuiting The energy in such a manner as to drive it to this point of MAXIMUM POTENTIAL, that is, its breakdown. THIS NEW MAGNETIC ACTION inside the fuel cell accomplishes this response, which then causes a point of transference that forms a NEW molecular structure. This new structure is associated with the conductive action of the red brass cover. THUS, the action taking place inside the fuel cell is a continuous process of COMBUSTION.

Faraday had a thought that is worth remembering. He stated, "The very progress which science makes as a body, is a continued correction of ignorance, i.e., a state which is ignorance in relation to The Future, though wisdom and knowledge in relation to the past."

We can only CLAIM the use of wisdom and knowledge about the past, as we ADMIT the errors of the past. Planet Earth is in dire need of repair because the POWERS TO BE will not use wisdom and knowledge to address the PAST.

Why is it necessary for someone OUTSIDE TRADITIONAL DISCIPLINE to step inside in order to gin a new freedom of thought? A former astronaut, Captain Edgar D. Mitchell stated it quite well when he said, "History has shown time and again that important scientific discoveries generally happen only when someone steps outside the limits of his traditional discipline and looks at something from a fresh point of view. Then what should have been obvious all along comes into focus."

Thus such great Technology has been suppressed for almost 20 years. First the U.S. Department of Energy issued a "gag" order and then a "grab" order (See Appendix 2), which is why Rory Johnson moved all his motors and technology out of his lab in the middle of the night and moved to California, and shortly thereafter he mysteriously died. Some inside information revealed that OPEC had been keeping track of all competitive technology and he was #1 on their Hit List! He was about to manufacture the motors through a nationwide dealership. Some motors still exist but the owner wants several million dollars for them.

Gerald J. Orlowski
4/28/96; APPENDIX 2

MARION (MIKE) MENNING, Senator 26Th. District Engerman, Minnesota 56126-(612)296-4171 July 2, 1979 Senator Dave Durenberger, 353 Russell Senate Office Bldg. Washington, DC 20510

Dear Senator Durenberger:

Several months ago, a new type of machine was developed by Mr. Johnson of Magnatron, Inc. At Elgin, Illinois, to see the engine and they know the engine works. It is not just some wild idea that somebody has.

The reason I am writing you a letter is that a restraining order has been placed on Mr. Johnson, the Chairman of Magnatron, Inc. Prohibiting him from producing the engine. I have been trying to find out the reason why. Mr. Johnson does not know why either. Would you please send a letter or make a telephone call to the Illinois Attorney General's office and ask what's going on and why they are trying to stop production of this engine? The attorney general's phone number is (313) 793-3444. Mr. Overhand is in charge of the case. I would appreciate your cooperation in this matter. Sincerely

Marion Menning State Senator enc. Pk

6.0.0.2. Pulsed capacitor discharge electric engine; USP #: 3,890,548;

June 17, 1975 Gray; Edwin V. (Northridge, CA)

There is disclosed herein an electric machine or engine in which a rotor cage having an array of electromagnets is rotatable in an array of electromagnets, or fixed electromagnets are juxtaposed against movable ones. The coils of the electromagnets are connected in the discharge path of capacitors charged to relatively high voltage and discharged through the electromagnetic coils when selected rotor and stator elements are in alignment, or when the fixed electromagnets and movable electromagnets are juxtaposed. The discharge occurs across spark gaps disclosed in alignment with respect to the desired juxtaposition of the selected movable and stationary electromagnets. The capacitor discharges occur simultaneously through juxtaposed stationary movable electromagnets wound so that their respective cores are in magnetic repulsion polarity, thus resulting in the forced motion of movable electromagnetic elements away from the juxtaposed stationary electromagnetic elements at the discharge, thereby achieving motion. In an engine, the discharges occur successively across selected ones of the gaps to maintain continuous rotation. Capacitors are recharged between successive alignment positions of particular rotor and stator electromagnets of the engine.

BACKGROUND OF THE INVENTION 1. Field of the Invention

There is no known engine or motor operated on the principle of the present invention, that a capacitor charged to a relatively high voltage from a low-voltage d-c source is discharged across a spark gap to provide current through motor drive coils in the discharge path, these being solenoids which generate motion by magnetic repulsion of juxtaposed pairs of cores. The solenoids are preferably configured in motor and stator assemblies to effect motion of the rotor element with respect to the stator. The present invention utilizes this principle to provide a rotary motion machine or engine which can develop considerable torque through the magnetic repulsion action of rotor and stator cores wound with coils through which capacitors are discharged synchronously with the positioning of the rotor coils opposite particular stator coils. Similarly, a linear action can be achieved with a stationary electromagnet juxtaposed against a movable electromagnet and the movable electromagnet can perform work with a tool or piston attached thereto. A novel control mechanism is associated with the rotor is the engine to position discharge elements appropriately to create the desired discharge through the electromagnet coils when the juxtaposed rotor and stator electromagnets are in alignment. The electromagnets in the stator and rotor are so arranged that the control mechanism can advance or retard the discharge points relative to rotor-stator positions for control of rotational speed. The discharge overshoot or back e.m.f. from the collapsing fields in the coils from the capacitor discharge is used to energize external batteries for conservation of power. The recovered energy thus stored may be used to operate equipment associated with the engine or motive force producing device. The engine or rotary electric machine of the invention is believed to operate on the principle of conservation of energy, in that once rotation is achieved, current is needed only at the instant of a capacitor discharge in order to advance the rotor. The rotor moves to the next discharge point on the inertia of the repulsion action. The capacitor is recharged during the interval and stores the energy until discharge at the next rotor-stator coil coincidence. Thus, the new engine produces torque and stores the excess energy for subsequent use. In a linear motion device according to the invention, only a single pulse discharge is needed to perform work. The applications of the engine include use as an electric automotive engine which is economical and which can regenerate a part of the energy consumed to provide power for other loads in the automotive electric vehicle. As a linear actuator an economical use of power is possible because each stroke will result from a single discharge pulse of a capacitor through a coil. 2. Prior Art Heretofore, electric engines or motors have operated on the principle that a conductor carrying a current in a magnetic field tends to move perpendicularly to that field; the electromagnetic torque developed by an armature or rotating portion of the motor is proportional to the magnetic flux in the stationary field and to the armature current. In direct current motors the field is created by current through two or more field coils disposed in opposing magnetic relationship in the motor casing, while current through a rotatable armature positioned in the field is alternatingly reversed in polarity to provide continuous motion. The polarity reversing mechanism is a commutator. Some d-c motors have their field windings electrically in parallel with the rotor armature winding and are called "shunt-wound" motors. Other d-c motors have field and armature windings connected in series. In both series and shunt motors commutators are used for reversing the magnetic polarity of the armature to maintain rotation within the field. A third type of d-c motor utilizes a permanent magnet field so that the operating current passes only through the armature winding. Such motors also use polarity reversing commutators to maintain direction of rotation. Reversal of direction of motion is effected by reversing the polarity of applied d-c potential.

Control of speed of d-c motors is accomplished basically by decrease or increase of magnetic field flux or the current through the armature. Either or both of these effects can be accomplished by raising or lowering the applied potential. In shunt motors, a series resistance may be varied to produce speed changes. In a permanent magnet motor or series motor, speed variation is best accomplished by voltage variation with a variable resistance in series with the motor d-c supply. In alternating current motors, as is well known, a rotating magnetic field is created in the stator, and the rotor may be wound with as many poles as there are in the stator, with terminals connected with slip rings, or the rotor may consist of solid bars shorted by rings on each end to form a "squirrel cage" configuration. The speed of an a-c motor depends on the frequency of the applied a-c energy, if the motor is synchronous. "Universal" motors are operable on either a-c or d-c energy.

In stepping motors, a rotor is moved from one pole to the next adjacent pole with each application of current, the rotor remaining at that position until a next application of current. This is accomplished by switching the current on and off or by pulsing the current. Examples of stepping motors are described in U.S. Pat. No. 3,467,902 to Shimizu, et al., U.S. Pat. No. 3,462,667 to Jackson, and U.S. Pat. No. 3,599,069 to Welch.

Operation of the a-c and d-c motors described above involves the consumption of substantial electric current. These motors can generate electric current when driven externally by a mechanical force. External energy to rotate the generator rotors can be provided by hydroelectric and steam sources or by other electric motors. In some of these systems, a d-c motor source drives an a-c generator for conversion of d-c energy to a-c energy or a d-c motor may drive a d-c generator which delivers a higher voltage than the source.

An extensive prior art search by the applicant uncovered no capacitor-discharge-operated motor resembling that of the present invention. All motors of the patents located in the search employed direct electrical connection between coils and electric power sources. Where selective switching is involved, semiconductor devices are employed, such as silicon-controlled rectifiers. Capacitors are used only for starting and phasing purposes, and not for basic motor operation from the discharge thereof, as in this invention.

SUMMARY OF THE INVENTION

This invention relates to electric motors or engines, and more particularly to a new electric machine including electromagnetic poles in a stator configuration and electromagnetic poles in a rotor configuration wherein in one form thereof the rotor is rotatable within the stator configuration and where both are energized by capacitor discharges through rotor and stator electromagnets at the instant of the alignment of a rotor electromagnet with a stator electromagnet. The rotor electromagnet is repelled from the stator electromagnet by the discharge of the capacitor through the coils of both the stator and rotor electromagnets at the same instant.

In an exemplary rotary engine according to this invention, rotor electromagnets may be disposed 120.degree. apart on a central shaft and major stator electromagnets may be disposed 40 degree. apart in the motor housing about the stator periphery. Other combinations of rotor elements and stator elements may be utilized to increase torque or rotation rate.

In another form, a second electromagnet is positioned to one side of each of the major stator electromagnets on a center line 131/3.degree. from the center line of the stator magnet, and these are excited in a predetermined pattern or sequence. Similarly to one side of each major rotor electromagnet is a second electromagnet spaced on a 131/3.degree. center line from the major rotor electromagnet. Electromagnets in both the rotor and stator assemblies are identical, the individual electromagnets of each being aligned axially and the coils of each being wired so that each rotor electromagnetic pole will have the same magnetic polarity as the electromagnet in the stator with which it is aligned and which it is confronting at the time of discharge of the capacitor. Charging of the discharge capacitor or capacitors is accomplished by an electrical switching circuit wherein electrical energy from a battery or other source of d-c potential may be applied in alternating polarity to ignition coils or other voltage step-up arrangements from which a high voltage d-c potential is derived through rectification by diodes. The capacitor charging circuit comprises a pair of high frequency switchers which feed respective automotive-type ignition coils employed as step-up transformers. The "secondary" of each of the ignition coils provides a high voltage square wave to a half-wave rectifier to generate a high voltage output pulse of d-c energy with each switching alternation of the high frequency switcher. Only one polarity is used so that a unidirectional pulse is applied to the capacitor bank being charged. Successive unidirectional pulses are accumulated on the capacitor or capacitor bank until discharged. Discharge of the bank of capacitors occurs across a spark gap by arc-over. The gap spacing determines the voltage at which discharge or arc-over occurs. An array of gaps is created by fixed elements in the engine housing and moving elements positioned on the rotor shaft. At the instant when the moving gap elements are positioned opposite fixed elements during the rotor rotation, a discharge occurs through the coils of the aligned rotor and stator electromagnets to produce the repulsion action between the stator and rotor electromagnet cores. A plurality of fixed gap elements are arrayed in the motor housing to correspond to the locations of the stator electromagnets in the housing. The rotor gap elements correspond to the positions of the rotor electromagnets on the rotor so that at the instant of correct alignment of the gaps the capacitors are discharged to produce the necessary current through the stator and rotor coils to cause the electromagnets to repel one another.

The charging circuits are arranged in pairs, and are such that the discharge occurs through both rotor and stator windings of the electromagnets, which are opposite one another when the spark gap elements are aligned and arc-over. The speed of the rotor can be changed by means of a clutch mechanism associated with the rotor. The clutch shifts the positions of the rotor gap elements so that the discharge will energize the stator coils in a manner to advance or retard the time of discharge with respect to the normal rotor/stator alignment positions. The discharge through the rotor and stator then occurs when the rotor has passed the stator 62/3.degree. for speed advance. By causing the discharge to occur when the rotor position is approaching the stator, the repulsion pulse occurs 62/3.degree. before the alignment position of the rotor and stator electromagnets, thus slowing the speed. The clutch mechanism for aligning capacitor discharge gaps for discharge is described as a control head. It may be likened to a firing control mechanism in an automotive combustion engine in that it "fires" the electromagnets and provides a return of any discharge overshoot potential back to the battery or other energy source.

The action of the control head is extremely fast. From the foregoing description, it can be anticipated that an increase in the speed or a decrease in speed of rotation can occur within the period in which the rotor electromagnet moves between any pair of adjacently located electromagnets in the stator assembly, which are 40.degree. apart in the exemplary engine according to the invention. Thus, speed changes can be effected in a maximum of one-ninth of a revolution.
he rotor speed-changing action of the control head and its structure are believed to be further novel features of the invention, in that they maintain normal 120.degree. firing positions during uniform speed or rotation conditions, but shift to .+-.62/3.degree. longer or shorter intervals for speed change by the novel shift mechanism in the rotor clutch assembly.
Accordingly, the preferred embodiment of this invention is an electric rotary engine wherein motor torque is developed by discharge of high potential from a bank of capacitors through stator and rotor electromagnet coils when the electromagnets are in alignment. The capacitors

are charged from batteries by a switching mechanism, and are discharged across spark gaps set to achieve the discharge of the capacitor charge voltage through the electromagnetic coils when the gaps and predetermined rotor and stator electromagnet pairs are in alignment.

Exemplary embodiments of the invention are herein illustrated and described. These exemplary illustrations and description should not be construed as limiting the invention to the embodiments shown, because those skilled in the arts appertaining to the invention may conceive of other embodiments in the light of the description within the ambit of the appended claims.

BRIEF DESCRIPTION OF THE DRAWINGS

FIG. 1 is an explanatory schematic diagram of a capacitor charging and discharging circuit utilized in the present invention; FIG. 2 is a block diagram of an exemplary engine system according to the invention; FIG. 3 is a perspective view of a typical engine system according to the invention, coupled to an automotive transmission; FIG. 4 is an axial sectional view taken at line 4--4 in FIG. 3; G. 5 is a sectional view taken at line 5--5 in FIG. 4; FIGS. 6 and 7 are fragmentary sectional views, corresponding to a portion of FIG. 5, illustrating successive advanced positions of the engine rotor therein; FIG. 8 is an exploded perspective view of the rotor and stator of the engine of FIGS. 3 and 4; FIG. 9 is a cross-sectional view taken at line 9--9 of FIG. 4; FIG. 10 is a partial sectional view, similar to the view of FIG. 9, illustrating a different configuration of electromagnets in another engine embodiment of the invention; FIG. 11 is a sectional view taken at line 11--11 in FIG. 3, illustrating the control head or novel speed change controlling system of the engine; FIG. 12 is a sectional view, taken at line 12--12 in FIG. 11, showing a clutch plate utilized in the speed change control system of FIG. 11; IG. 13 is a fragmentary view, taken at line 13--13 in FIG. 12; FIG. 14 is a sectional view, taken at line 14--14 in FIG. 11, showing a clutch plate which cooperates with the clutch plate of FIG. 12; FIG. 15 is a fragmentary sectional view taken at line 15--15 of FIG. 13; FIG. 16 is a perspective view of electromagnets utilized in the present invention; FIG. 17 is a schematic diagram showing cooperating mechanical and electrical features of the programmer portion of the invention; IG. 18 is an electrical schematic diagram of an engine according to the invention, showing the electrical relationships of the electromagnetic components embodying a new principle of the invention; and FIG. 19 is a developed view, taken at line 19--19 of FIG. 11, showing the locations of displaced spark gap elements of the speed changing mechanism of an engine according to the invention.

DESCRIPTION OF THE PREFERRED EMBODIMENT

As hereinbefore mentioned, the basic principle of operation of the engine of the invention is the discharge of a capacitor, across a spark gap through an inductor. When a pair of inductors is used, and the respective magnetic cores thereof are arranged opposite and another in magnetic polarity repulsion relation, the discharge through them causes the cores to repel each other with considerable force.

Referring to the electrical schematic diagram of FIG. 1, a battery 10 energizes a pulse-producing vibrator mechanism 16, which may be of the magnetic type incorporating an armature 15 moving between contacts 13 and 14, or of the transistor type (not shown) with which a high frequency bipolar pulsed output is produced in primary 17 of transformer 20. The pulse amplitude is stepped-up in secondary 19 of transformer 20. Wave form 19a represents the bidirectional or bipolar pulsed output. A diode rectifier 21 produces a unidirectional pulse train, as indicated at 21a, to charge capacitor 26. A delay coil 23 is connected in series with the unipolar pulsed output to capacitor 26. Successive unidirectional pulses of wave 21a charge capacitor 26 to a high level, as indicated at 26a, until the voltage amplitude at point A reaches the breakdown potential of spark gap 30. At the breakdown of spark gap 30, capacitor 26 discharges across the arc created through the inductor coil 28. A current pulse is produced which magnetizes core 28a. Simultaneously, another substantially identical charging system 32 produces a discharge through inductor 27 across spark gap 29 to magnetize core 27a. Cores 28a, 27a are wound with coils 28, 27 so that their magnetic polarities are the same. As the cores 27a, 28a confront one another, they tend to fly apart when the discharge occurs through coils 27 and 28 because of repulsion of identical magnetic poles, as indicated by arrow 31. If core 28a is fixed or stationary and core 27a is movable, then core 27a may have tools 33 attached to it to perform work when the capacitor discharges.

Referring to FIGS. 1 and 2, a d-c electrical source or battery 10 energizes pulsators 36 (including at least two vibrators 16 as previously described) when switch 11 between the battery 10 and pulsator 36 is closed, to apply relatively high frequency pulses to the primaries of transformers 20. The secondaries of transformers 20 are step-up windings which apply bipolar pulses, such as pulses 19a (FIG. 1) to the diodes in converter 38. The rectified unidirectional pulsating output of each of the diodes in converter 38 is passed through delay coils 23, 24, thus forming a harness 37 wound about the case of the engine, as hereinafter described, which is believed to provide a static floating flux field. The outputs from delay lines 37 drive respective capacitors in banks 39 to charge the capacitors therein to a relatively high charge potential. A programmer and rotor and stator magnet control array 40, 41, 42 is formed by spark gaps positioned, as hereinafter described, so that at predetermined positions of the rotor during rotation of the engine, as hereinafter described, selected capacitors of capacitor banks 39 will discharge across the spark gaps through the rotor and stator electromagnets 43, 44. The converters 38, magnetic harness 37, capacitor banks 39, programmer 40, and controls 41, 42 from a series circuit path across the secondaries of transformers 20 to the ground, or point of reference potential, 45. The capacitor banks 39 are discharged across the spark gaps of programmer 40 (the rotor and stator magnet controls 41, 42). The discharge occurs through the coils of stator and rotor electromagnets 43, 44 to ground 45. Stator and rotor electromagnets are similar to those shown at 27, 27a, 28, 28a in FIG. 1.

The discharge through the coils of stator and rotor electromagnets 43, 44 is accompanied by a discharge overshoot or return pulse, the output of which is applied in an appropriate polarity to a secondary battery 10a to store this excess energy. The overshoot pulse returns to battery 10a because after discharge the only path open is that to battery 10a, since the gaps in 40, 41 and 42 have broken down, because the capacitors in banks 39 are discharged and have not yet recovered the high voltage charge from the high frequency pulsers 36 and converter rectifier units 38.

In the event of a misfire in the programmer control circuits 40, 41, 42, the capacitors are discharged through a rotor safety discharge circuit 46 and returned to batteries 10-10a, adding to their capacity. The circuit 46 is connected between the capacitor banks 39 and batteries 10, 10a.

Referring to FIG. 3, a motor or engine 49 according to the present invention is shown connected with an automotive transmission 48. The transmission 48 represents one of many forms of loads to which the engine may be applied. A motor housing 50 encases the operating mechanism hereinafter described. The programmer 40 is axially mounted at one end of this housing. Through apertures 51, 52 a belt 53 couples to a pulley 57 (not shown in this view) and to an alternator 54 attached to housing 50. A pulley 55 on the alternator has two grooves, one for belt 53 to the drive pulley 58 on the shaft (not shown) of the engine 49, and the other for a belt 58 coupled to a pulley 59 on a pump 60 attached to housing 50. A terminal box 61 on the housing interconnects means between the battery assembly 62 and motor 49 via cables 63 and 64.

An intake 65 for air is coupled to pump 60 via piping 68, 69 and from pump 60 via tubing or piping 66, 70 to the interior of housing 50 via coupling flanges 67 and 71. The air flow tends to cool the engine, and the air may preferably be maintained at a constant temperature and humidity so that a constant spark gap discharge condition is maintained. A clutch mechanism 80 is provided on programmer 40.

Referring to FIGS. 4, 5 and 9, rotor 81 has spider assemblies 83, 84 with three electromagnet coil assembly sets mounted thereon, two of which are shown in FIG. 4, on 85 at 85a and 85b, and on 86 at 86a and 86b. One of the third electromagnet coil assemblies, designated 87a, is shown in FIG. 5, viewed from the shaft end. As more clearly shown in the perspective view of FIG. 8, a third spider assembly 88 provides added rigidity and a central support for the rotor mechanism on shaft 81.

The electromagnet sets 85a and 85b, 86a and 86b, 87a and 87b, disposed on rotor 81 and spiders 83, 84, and 88 each comprise pairs of front units 85a, 86a, 87a and pairs of rear units 85b, 86b, 87b. Each pair consists of a major electromagnet and a minor electromagnet, as hereinafter described, which are embedded in an insulating material 90, which insulates the electromagnet coil assemblies from one another and secures the electromagnets rigidly in place on the spider/rotor cage 81, 83, 84, 88.

The interior wall 98 of housing 50 is coated with an electrically insulating material 99 in which are embedded electromagnet coils, as hereinafter described, and the interiors of end plates 100, 101 of the housing 50. On the insulating surface 98 of housing 50 is mounted a series of stator electromagnet pairs 104a, identical with electromagnet pairs 85a, 86a, 87a, etc. Electromagnet pairs such as 104a or 105a are disposed every 40.degree. about the interior of housing 50 to form a stator which cooperates with the rotor 81-88. An air gap 110 of very close tolerance is defined between the rotor and stator electromagnets, and air from pump 65 flows through this gap.

As shown in FIG. 8, the electromagnet assemblies, such as 85 through 87, of the rotor and magnet assemblies, such as 104a in the stator are so embedded in their respective insulative plastic carriers (rotor and stator) that they are smoothly rounded in a concave contour for the stator, and in a convex contour on the rotor to permit smooth and continuous rotation of rotor 81 in stator housing 50. The air gap 110 is uniform at all positions of any rotor element within the stator assembly, as is clearly shown in FIG. 16.

The rotor 81 and spiders 83, 84, 88 are rigidly mounted on a shaft 111 journaled in bearing assemblies 112, 113 which are of conventional type, for easy rotation of the rotor on shaft 111 within housing 50.

Around the central outer surface of housing 50 are wound a number of turns of wire 23, 24 to provide a static flux coil 114 as hereinbefore described, which is a delay line, as previously described.

FIGS. 5, 6, 7 and 9 are cross-sectional views of the rotor assembly 81-88, arranged to show the positioning and alignment of the rotor and stator electromagnet coil assemblies at successive stages of the rotation of rotor 81-88 through a portion of a cycle of operation thereof. For example, in FIG. 5 the rotor assembly 81-88 is shown so positioned that a minor rotor electromagnet assembly 91 is aligned with a minor stator electromagnet assembly 117.

As shown in further detail in FIG. 16, minor electromagnet assembly 117 consists of an iron core 118, grooved so that there may be wound thereabout a coil of wire 119. Core 118 is the same in stator electromagnet 117 as it is in rotor electromagnet 91.

As a position 131/3.degree. to the right of rotor electromagnet 91, as viewed in FIGS. 5 and 16, there is a second or major rotor electromagnet 121 which has a winding 123 about its core 122. The electromagnets 91, 121 are the pair 85a of FIGS. 4 and 8.

At a position 131/3.degree. to the left of stator electromagnet 117, as viewed in FIG. 5, there is a second or major stator electromagnet 120 whose core 122 is of the same configuration as core 122 of rotor electromagnet 121. A winding 123 about core 122 of electromagnet 120 is of the same character as winding 123 on electromagnet 121.

Electromagnet assembly pair 85a on the rotor is identical in configuration with that of the electromagnet stator assembly pair 104a except for the position reversal of the elements 117-120 and 91-121 of the respective pairs.

here are nine pairs of electromagnets 120-117 (104a) disposed at 40.degree. intervals about the interior of housing 50. The center line of core 122 of electromagnet 120 is positioned 131/3.degree. to the left of the center line of the core 118 of electromagnet 117. Three pairs of electromagnets 85a, 86a, 87a are provided on rotor assembly 81-88 as shown in FIG. 5.

Other combinations are possible, but the number of electromagnets in the rotor should always be an integral fraction of the number of electromagnets in the stator. As shown in FIG. 8, for the rotor assembly 85a, 85b, there are three of each of the front and back pairs of electromagnetic assemblies. Similarly, as shown in FIGS. 4 and 8, there are nine front and back pairs of electromagnets in the stator such as 104a and 104b.

In order to best understand the operation of the rotor 81-88 rotating within the stator housing 50 of an engine according to this invention, the positions of rotor electromagnets 91 and stator electromagnets 117 are initially exactly in line at the 131/3.degree. peripheral starting position marked on the vertical center line of FIG. 5. The winding direction of the coils of these magnets is such that a d-c current through the coils 119 will produce a particular identical magnetic polarity on each of the juxtaposed surfaces 125 of magnet 117, and 126 of magnet 91, (FIG. 5). FIGS. 16 and 6 illustrate the next step in the motion wherein the two major electromagnets, 120 in the stator and 121 in the rotor, are in alignment.

When the d-c discharges from the appropriate capacitors in banks 39 occur simultaneously across spark gaps through the coils 119 of electromagnets 117 and 91, at the instant of their alignment, their cores 118 will repel one another to cause rotor assembly 81-88 to rotate clockwise in the direction indicated by arrow 127. The system does not move in the reverse direction because it has been started in the clockwise direction by the alternator motor 54 shown in FIG. 3, or by some other starter means. If started counterclockwise, the rotor will continue to move counterclockwise.

As hereinbefore noted, the discharge of any capacitor occurs over a very short interval across its associated spark gap, and the resulting magnetic repulsion action imparts motion to the rotor. The discharge event occurs when electromagnets 117 and 91 are in alignment. As shown in FIG. 5, rotor electromagnet 91a is aligned with stator electromagnet 117c, and rotor electromagnet 91b is aligned with stator electromagnet 117e at the same time that similar electromagnets 117 and 91 are aligned. A discharge occurs through all six of these electromagnets simultaneously (that is, 117, 91; 117c, 91a, 117e and 91b). A capacitor and a spark gap are required for each coil of each electromagnet. Where, as in the assembly shown in FIG. 8, front and back pairs are used, both the axial in-line front and back coils are energized simultaneously by the discharge from a single capacitor or from a bank of paralleled capacitors such as 25, 26 (FIG. 1). Although FIGS. 4 and 8 indicate the use of front and back electromagnets, it should be evident that only a single electromagnet in any stator position and a corresponding single electromagnet in the rotor position, may be utilized to accomplish the repulsion action of the rotor with respect to the stator. As stated, each electromagnet requires a discharge from a single capacitor or capacitor bank across a spark gap for it to be energized, and the magnetic polarity of the juxtaposed magnetic core faces must be the same, in order to effect the repulsive action to produce the rotary motion. ferring to FIGS. 5 and 6, the repulsion action causes the rotor to move 131/3.degree. clockwise, while electromagnets 91, 91a and 91b move away from electromagnets 117, 117c and 117e to bring electromagnets 121, 121a and 121b into respective alignment with electromagnets 120a, 120d and 120f. At this time, a capacitor discharge across a spark-gap into their coils 123 occurs, thus moving the rotor. Another 131/3.degree. ahead, as shown in FIG. 7, major electromagnets 121, 121a and 121b come into alignment with minor electromagnets 117a, 117d and 117f, at which time a discharge occurs to repeat the repulsion action, this action continuing as long as d-c power is applied to the system to charge the capacitors in the capacitor banks.

FIG. 18 further illustrates the sequencing of the capacitor discharges across appropriate spark gap terminal pairs. Nine single stator coils and three single rotor coils are shown with their respective interconnections with the spark gaps and capacitors with which they are associated for discharge. When the appropriate spark gap terminals are aligned, at the points in the positioning of the rotor assembly for most effective repulsion action of juxtaposed electromagnet cores, the discharge of the appropriate charged capacitors across the associated spark gap occurs through the respective coils. The capacitors are discharged in sets of three through sets of three coils at each discharge position, as the rotor moves through the rotor positions. In FIG. 18, the rotor electromagnets are positioned linearly, rather than on a circular base, to show the electrical action of an electric engine according to the invention. These motor electromagnets 201, 202, and 203 are aligned with stator electromagnets 213, 214 and 215 at 0.degree., 120.degree. and 450.degree. respectively. The stator electromagnets are correspondingly shown in a linear schematic as if rolled out of the stator assembly and laid side by side. For clarity of description, the capacitors associated with the rotor operation 207, 208, 209 and 246, 247, 248, 249, 282 and 283 are arranged in vertical alignment with the respective positions of the rotor coils 201, 202, 203 as they move from left to right, this corresponding to clockwise rotation of the rotor. The stator coils 213, 214, 215, 260, 261, 262, 263, 264, 265, 266, etc. and capacitor combinations are arranged side by side, again to facilitate description.

An insulative disc 236 (shown in FIG. 17 as a disc, but opened out linearly in FIG. 18) has mounted thereon three gap terminal blocks 222, 225 and 228. Each block is rectangularly U-shaped, and each interconnects two terminals with the base of the U. Block 222 has terminals 222a and 222b, block 225 has terminals 225a and 225b, and block 228 has terminals 228c and 228d. When insulative disc 230 is part of the rotor, as indicated by mechanical linkage 290, it can be seen that terminal U 222 creates a pair of gaps with gap terminals 223 and 224, respectively. Thus, when the voltage on capacitor 216 from charging circuit 219 is of a value which will arc over the air spaces between 222a and 223, and between 222b and 224, the capacitor 216 will discharge into the coil of electromagnet 213 to ground. Similarly gap terminal U 225 forms a dual spark gap with gap terminals 226 and 227 to result in arc-over when the voltage on capacitor 217, charged by charging circuit 220, discharges into the coil of electromagnet 214. Also, U-gap terminal 228 with terminals 228c and 228d, creates a spark gap with terminals 229 and 230 to discharge capacitor 218, charged by charging circuit 221, into coil 215. At the same time, rotor coils, 201, 202 and 203 across gaps 201a-204, 202b-205 and 203c-206 each receives a discharge from respective capacitors 207, 208, and 209.

When the electromagnet coils 213, 214, 215 and 201, 202, 203 are energized, the repulsion action causes the rotor assembly to move to position 2 where a new simultaneous group of discharges occurs into rotor coils 201, 202, and 203 from capacitors 246, 248, and 282 across gaps 201a-240, 202b-242 and 203c-244. Simultaneously, because gap-U-elements 222, 225 and 228 have also moved to position 2 with the rotor assembly, capacitor 261 is discharged through electromagnet coil 260, capacitor 265 is discharged through electromagnet coil 264, and capacitor 269 is discharged through electromagnet coil 268 in alignment with position 2 of the rotor electromagnet coils, thus to cause the rotor electromagnets to move to position 3 where the discharge pattern is repeated now with capacitors 247, 249 and 283 discharging through the rotor electromagnet coils 201, 202, 203, and the capacitors 263, 267 and 281 discharging respectively through stator electromagnet coils 262, 266 and 280.

After each discharge the charging circuits 219-221 and 272-277 for the stator capacitors, and 210-212 and 284-289 for the rotor capacitors, are operated continuously from a battery source, as described earlier with reference to FIG. 1, to constantly recharge the capacitors to which each is connected. Those versed in the art will appreciate that, as each capacitor discharges across an associated spark gap, the resulting drop in potential across the gap renders the gap an open circuit until such time as the capacitor can recharge to the arc-over level of the gap. This recharge to a discharge potential occurs before a rotor element arrives at the next position in question.

The mechanical schematic diagram of FIG. 17 further clarifies the operation of the spark-gap discharge programming system. A forward disc 236 of an electrically insulative material, has thereon the set of U-shaped gap terminal connectors previously described. These are positioned at 0.degree., 120.degree. and 240.degree. respectively. In FIG. 17, schematic representations of the position of the coil and capacitor arrangements at the start of a cycle are shown to correspond to the description hereinabove with reference to FIG. 18. Accordingly, the coil and capacitor combinations 213/216, 214/217, and 215/218 are shown connected with their gap terminals, respectively, 223/224, 226/227 and 229/230. On the rotor coil and capacitor connection three separate discs 291, 292 and 293 are shown, each with a single gap terminal. The discs 291-293 are rotated so as to position their respective gap terminals 201a, 202b and 203c at 120.degree. increments, with the 0.degree. position corresponding to the 0.degree. position of U-gap terminal 222 on disc 230.

Representative gap terminals are shown about the peripheries of discs 230, 291-293 to clearly indicate how, as the discs turn in unison, the gap alignments correspond so that three rotor coil/capacitor positions always line up with three stator coil/capacitors at 120.degree. intervals about the rotary path, producing an alignment every 40.degree., there being nine stator coils. Thus there are three simultaneous discharges into stator coils and three into rotor coils at each 40.degree. position. Nine positions displaced 40.degree. apart provide a total of 27 discharge points for capacitors into the rotor coils and 27 discharge points for capacitors into the stator coils in one revolution.

It will be understood that, as illustrated in FIGS. 17 and 18, nine individual electromagnet coils are shown in the stator and three in the rotor, in order to show in its simplest form how the three rotor electromagnets are stepped forward from alignment with three of the stator electromagnets, when the appropriate spark gaps are in alignment, to effect the discharge of capacitors through juxtaposed pairs of rotor/stator electromagnets. The repulsion moves the rotor electromagnet from the stator electromagnet to the next alignment position advanced at an arc of 40.degree. from the preceding alignment position. In the interval until another rotor electromagnet, 120.degree. removed, is aligned with the stator electromagnet that had just been excited, the associated capacitor is recharged to a potential which will cause the spark gap to break down to produce another discharge of this capacitor on the next revolution. Thus the rotor moves from one position to the next, with capacitor discharges occurring each 40.degree. of rotation, a total of nine per revolution. It should be obvious that, with other rotor/stator combinations, the number of electromagnet coincidences and spark-gap discharges will vary. For example, with the coil pairs shown in FIGS. 4 through 8, a total of 27 discharges will occur. Although there are 18 stator electromagnets and three rotor electromagnets, the discharge pattern is determined by the specific spark gap arrangement.

The rotor/stator configuration of FIGS. 5 and 8, involving the major and minor pairs of electromagnets such as 85a and 104a (the terms "minor" and "major" referring to the difference in size of the elements), include nine pairs of electromagnets in the stator, such as 104a, with three electromagnet pairs of the rotor, such as 85a. Because of the 131/3.degree. separation between the major and minor electromagnets in the rotor pair 85a, with the same separation of minor and major electromagnets of the stator pair 104a, the sequence of rotation and discharge described above, with respect to the illustrative example of FIG. 5, involves the following:

1. A minor element 117 of stator pair 104a is aligned with the minor element 91 of rotor pair 85a. On the discharge, this moves the rotor ahead 131/3. degree.

2. The major rotor element 122 of the pair 85a now is aligned with the major stator element 120b of the next stator electromagnet pair, in the stator array as shown in FIG. 6. On the discharge, the rotor moves ahead 131/3.degree... This brings the minor rotor electromagnet 91 into alignment with the major stator electromagnet 120b of pair 104d, and the major

electromagnet 122 (just discharged) of pair 85a into alignment with minor electromagnet 117b of pair 104d, and the rotor spark gap ements into alignment with a different position of gap elements connected with capacitors not discharged in the previous position of the rotor. It should be remembered at this point that it is the positioning of a rotatable spark gap array, similar to that illustrated in FIGS. 17 and 18, which controls the time of discharge of capacitors connected to these gap terminals. Therefore, any electromagnet can be energized twice successively from separate capacitors as the rotor brings appropriate gap terminals into alignment with the coil terminals of a particular electromagnet.

Thus, although major electromagnet 120b of pair 104d has just been energized as described above, it can now be energized again along with minor rotor electromagnet 91 in step 3, because the rotor moved to a new set of terminals of the spark gap arrays connected with capacitors not yet discharged. These capacitors now discharge through rotor electromagnet 91 and stator electromagnet 120b, causing rotor to move ahead another 131/3.degree., thus again aligning two minor electromagnets again, these being 117b of stator pair 104d and 91 of rotor pair 85a. The rotor has now moved 40.degree. since step 1 above. The sequence is repeated, and it is to be noted that at each 131/3.degree. step, the discharges rotate the rotor another 131/3.degree.. There are 27 steps per revolution with nine stator coil pairs. The discharge sequence is not uniform, as is shown in Table I. In the stator, three major electromagnets 120.degree. apart are energized twice in sequence followed by a hiatus of one step while three minor electromagnets of the stator, 120.degree. apart, are energized during the hiatus. In the rotor the major electromagnets are energized during a hiatus step following two minor electromagnet energization steps. A total of 27 energizations are thus accomplished in the nine pairs of coils of the stator. In Table I, the leftmost column depicts the location of each rotor arm 85, 86, 87 at an arbitrarily selected step No. 1 position. For example, in step 1 rotor arm 85 has a minor stator and minor rotor electromagnet in alignment for capacitors to discharge through them simultaneously at the 131/3.degree. position.

TABLE I
CAPACITOR DISCHARGE SEQUENCE FOR ONE REVOLUTION OF ROTOR IN SYSTEM OF FIGS. 5 AND 8 Rotor Stator Step No. Electro- Electro- Rotor Arm Rotor magnet magnet 87 85 86 Angle Minor Major Minor Major ______________________________________ 10 1 19 13 1/3.degree. x x 11 2 20 26 2/3.degree. x x 12 3 21 40.degree. x x 13 4 22 53 1/3.degree. x x 14 5 23 66 2/3.degree. x x 15 6 24 80.degree. x x 16 7 25 93 1/3.degree. x x 17 8 26 106 2/3.degree. x x 18 9 27 120.degree. x x 19 10 1 133 1/3.degree. x x 20 11 2 146 2/3.degree. x x 21 12 3 160.degree. x x 22 13 4 173 1/3.degree. x x 23 14 5 186 2/3.degree. x x 24 15 6 200.degree. x x 25 16 7 213 1/3.degree. x x 26 17 8 226 2/3.degree. x x 27 18 9 240.degree. x x 1 19 10 253 1/3.degree. x x 2 20 11 266 2/3.degree. x x 3 21 12 280.degree. x x 4 22 13 293 1/3.degree. x x 5 23 14 306 2/3.degree. x x 6 24 15 320.degree. x x 7 25 16 333 1/3.degree. x x 8 26 17 346 2/3.degree. x x 9 27 18 360.degree. x x

Similarly, in step 1 rotor arm 86 is at the 1331/3.degree. position with a minor rotor and minor stator electromagnet in alignment for discharge. Simultaneously, rotor arm 87 is at the 2531/3.degree. position with a minor rotor and minor stator in alignment for capacitor discharge therethrough. The other steps of the sequence are apparent from Table I, for each position of the three rotor arms at any step and the juxtapositions of respective stator and rotor electromagnet elements at that position. In the simplified motor arrangement shown in schematic form in FIG. 18, with single electromagnet configuration the alignment is uniform and the discharge sequences follow sequentially.

As hereinbefore mentioned, a change in speed is effected by displacing the stator spark gap terminals on the rotor (shown at 236 in FIGS. 17 and 18) either counter-clockwise or clockwise 62/3.degree. so that the discharge position of the stator electromagnets is displaced 62/3.degree. either clockwise or counter-clockwise of a rotor electromagnet at the time of discharge. Referring to FIGS. 11 to 15, the simultaneous discharge of selected capacitors into the electromagnets so displaced results in a deceleration at the time the rotor electromagnet is just approaching the associated stator, or an acceleration if the rotor electromagnet is just leaving its associated stator electromagnet. In each event, there is a repulsive reaction between the stator and rotor electromagnets, so that if the rotor is approaching the stator, there is a slow-down and if the rotor is receding from the stator there is a speed-up.

Referring to FIG. 11, clutch mechanism 304 about shaft 111 is operated electromagnetically in conventional manner to displace the spark-gap mechanism 236 which is operated normally in appropriate matching alignment with the rotor spark-gap discs 291, 292, 293. Clutch 304 has a fixed drive element 311 containing an electromagnetic drive coil (not shown) and a motor element 310 which, when the electromagnetic drive coil is energized, can be operated by a direct current. The operation of motor element 310 brings into operation spark gap elements 224r, 223r or 223f, 224f of the system shown in FIGS. 4, 5 and 8, as illustrated in FIG. 19.

The fixed stator coil spark gap terminal pairs 223, 224 and 266, 267 are arrayed about a cylindrical frame 322 which is fabricated in insulative material. In the illustrative example of FIGS. 17 and 18, there are nine such spark gap terminal pairs about the periphery of cylinder frame 324. In the engine of FIGS. 4 to 8, a total of 27 such spark gap pairs are involved. In addition, although not shown in the drawing, there are also pairs of terminals, such as 223r or f, 224r or f and 266r or f, 267r or f, displaced 62/3.degree. on either side of the pairs 223, 224 or 266, 267 and all other pairs in the spark gap array, the letters r and f denoting "retard" and "faster." The latter displaced pairs of used in the control of speed of the engine rotor. The displaced pairs not shown are involved with the operation of cluth 304, the speed changing control element.

Clutch 304 is associated with shaft 111 in that the movable element 310 draws clutch disc element 316 on shaft 111 away from clutch disc element 322 when energized by a voltage of appropriate polarity applied to its motor electromagnet 311. Such clutch drives are well known in the art.

The clutch mechanism 304 of FIGS. 11 and 19, when not energized is in the configuration shown in FIG. 11. The energized configuration of clutch 304 is not specifically illustrated. Upon energization, spark-gap element 222 on disc 236 is displaced rightward, as viewed in FIG. 11, by broken lines 236X, into alignment with the positions of fixed spark-gap terminals 223f, 224f and 267r, 266r. When the disc is in position 236X, the flattened edge 332 of pin 330 in disc 325 rides on surface 350 of disc 322. Normally, the flattened edges 351 of pins 330 are engaged against the flat edge 352 in recess 331 of disc 322. The displacement of disc 322 on shaft 111 is effected by the action of clutch 304 against spring 314 (FIG. 11). An electric switch (not shown) of clutch mechanism 304 energizes it from a d-c power source, and has two positions, one for deceleration and one for acceleration. In either position, clutch 304 is engaged to pull clutch disc 322 from clutch disc 325, momentarily. For the decelerate or the accelerate position, the displaced alignment of spark gap elements 222 is with the 224f, 223f and the 224r, 223r spark-gap terminal elements. However, only the 224f, 223f spark-gap elements are switched into operation with appropriate capacitors for the accelerate position, while in the decelerate position only the 223r and 224r spark-gap elements are switched into the circuit with their associated capacitors.

Of course, when insulative disc 236 is displaced by clutch 304, its gap terminals 222, 225 and 228 (FIGS. 14 and 18) are all displaced into the alignment position of 236X so as to engage the r and f lines of fixed spark gap elements. Although the accelerate and decelerate positions of disc 236 are the same, it is the switching into operation of the 223, 224 or 266, 267 exemplary r or f pairs of terminals which determine whether speed up or slow down action of the rotor will occur.

The momentary displacement of clutch disc 322 from clutch disc 325 results in rotation of disc 325 about disc 322 through an angle of 120.degree.. The detent ball and spring mechanism 320, 321 in disc 325 positions itself between one detent dimple 328 and a succeeding one 328 at a position 120.degree. away on disc 325. As stated, flat 332 of pin 330 rides on surface 350 of disc 322, and pin 330 leaves the pin-holding groove 331/352 along ramp 333 in disc 322 during the momentary lifting of disc 322 by clutch 304. Pin 330 falls back into the next groove 331 at a point 120.degree. further on about disc 322. Pin 330 falls into place in groove 331 on ramp 334. Pins 330 are rotatable in their sockets 353, so that for either clockwise or counter-clockwise rotation, the flat 351 will engage the flat 352 by the particular ramp it encounters.
The deceleration or acceleration due to the action of clutch 304 thus occurs within a 120.degree. interval of rotation of disc 325. Disc 322 during this interval may only move a fraction of this arc. There has been described hereinabove an electromotive engine system wherein at least one electromagnet is in a fixed position and a second electromagnet of similar configuration is juxtaposed with it in a magnetic polarity relationship such that, when the cores of the electromagnets are energized, the juxtaposed core faces repel one another. One core being fixed and the second core being free to move, any attachments to the second electromagnet core will move with it. Hence, if a plurality of fixed cores are positioned about a circular confining housing, and, within the housing, cores on a shaft are free to move, the shaft is rotationally urged each time the juxtaposed fixed and rotatable cores are in alignment and energized. Both the fixed and the movable cores are connected to spark gap terminal elements, and the associated other terminal elements of the spark gaps are connected to capacitors which are changed to a high voltage from pulsed unipolar signal generators. These capacitors are discharged through the electromagnets across the spark gaps. By switching selected groups of capacitors into selected pairs of spark gap elements displaced from the normal uniformly positioned elements for discharge through the electromagnets, the rotor of the circular array systems is accelerated and decelerated. By confining a fixed electromagnet array in a linear configuration with a linearly movable electromagnet to which a working tool is attached, exciting the juxtaposed pairs of electromagnets by capacitor discharge results in the generation of linear force for such tools as punch presses or for discharging projectiles with considerable energy.

6.0.0.3. Hokei Minato: Magnet Motor

When we first got the call from an excited colleague that he'd just seen the most amazing invention -- a magnetic motor that consumed almost no electricity -- we were so skeptical that we declined an invitation to go see it. If the technology was so good, we thought, how come they didn't have any customers yet?

We forgot about the invitation and the company until several months later, when our friend called again. "OK," he said. "They've just sold 40,000 units to a major convenience store chain. Now will you see it?"
In Japan, no one pays for 40,000 convenience store cooling fans without being reasonably sure that they are going to work.

The streets of east Shinjuku are littered with the tailings of the many small factories and workshops still located there -- hardly one's image of the headquarters of a world-class technology company. But this is where we are first greeted outside Kohei Minato's workshop by Nobue Minato, the wife of the inventor and co-director of the family firm.
The workshop itself is like a Hollywood set of an inventor's garage. Electrical machines, wires, measuring instruments and batteries are strewn everywhere. Along the diagram-covered walls are drill presses, racks of spare coils, Perspex plating and other paraphernalia. And seated in the back, head bowed in thought, is the 58-year-old techno maestro himself. Minato is no newcomer to the limelight. In fact, he has been an entertainer for most of his life, making music and producing his daughter's singing career in the US. He posseses an oversized presence, with a booming voice and a long ponytail. In short, you can easily imagine him onstage or in a convertible cruising down the coast of California -- not hunched over a mass of wires and coils in Tokyo's cramped backstreets.

Joining us are a middle-aged banker and his entourage from Osaka and accounting and finance consultant Yukio Funai. The banker is doing a quick review for an investment, while the rest of us just want to see if Minato's magnetic motors really work. A prototype car air conditioner cooler sitting on a bench looks like it would fit into a Toyota Corolla and quickly catches our attention.

Seeing is Believing

Nobue then takes us through the functions and operations of each of the machines, starting off with a simple explanation of the laws of magnetism and repulsion. She demonstrates the "Minato Wheel" by kicking a magnet-lined rotor into action with a magnetic wand.

Looking carefully at the rotor, we see that it has over 16 magnets embedded on a slant -- apparently to make Minato's machines work, the positioning and angle of the magnets is critical. After she kicks the wheel into life, it keeps spinning, proving at least that the design doesn't suffer from magnetic lockup.

She then moves us to the next device, a weighty machine connected to a tiny battery. Apparently the load on the machine is a 35kg rotor, which could easily be used in a washing machine. After she flicks the switch, the huge rotor spins at over 1,500 rpms effortlessly and silently. Meters show the power in and power out. Suddenly, a power source of 16 watt or so is driving a device that should be drawing at least 200 to 300 watts.

Nobue explains to us that this and all the other devices only use electrical power for the two electromagnetic stators at either side of each rotor, which are used to kick the rotor past its lockup point then on to the next arc of magnets. Apparently the angle and spacing of the magnets is such that once the rotor is moving, repulsion between the stators and the rotor poles keeps the rotor moving smoothly in a counterclockwise direction. Either way, it's impressive.

Next we move to a unit with its motor connected to a generator. What we see is striking. The meters showed an input to the stator electromagnets of approximately 1.8 volts and 150mA input, and from the generator, 9.144 volts and 192mA output. 1.8 x 0.15 x 2 = 540mW input and 9.144 x 0.192 = 1.755W out.

But according to the laws of physics, you can't get more out of a device than you put into it. We mention this to Kohei Minato while looking under the workbench to make sure there aren't any hidden wires.

Minato assures us that he hasn't transcended the laws of physics. The force supplying the unexplained extra power out is generated by the magnetic strength of the permanent magnets embedded in the rotor. "I'm simply harnessing one of the four fundamental forces of nature," he says.

Although we learned in school that magnets were always bipolar and so magnetically induced motion would always end in a locked state of equilibrium, Minato explains that he has fine-tuned the positioning of the magnets and the timing of pulses to the stators to the point where the repulsion between the rotor and the stator (the fixed outer magnetic ring) is transitory. This creates further motion -- rather than a lockup. (See the sidebar on page 41 for a full explanation).

Real Products

Nobue Minato leads us to the two devices that might convince a potential investor that this is all for real.

First, she shows us the cooling fan prototype that is being manufactured for a convenience store chain's 14,000 outlets (3 fans per outlet). The unit looks almost identical to a Mitsubishi-manufactured fan unit next to it, which is the unit currently in wide use. In a test, the airflow from both units is about the same.
The other unit is the car air conditioning prototype that caught our eye as we came in. It's a prototype for Nippon Denso, Japan's largest manufacturer of car air conditioners. The unit is remarkably compact and has the same contours and size as a conventional unit. Minato's manufacturing skills are clearly improving.

The Banker and his Investment

Minato has good reason to complain about Japan's social and cultural uniformity. For years, people thought of him as an oddball for playing the piano for a living, and bankers and investors have avoided him because of his habit of claiming that he'd discovered a breakthrough technology all by himself -- without any formal training.

However, the Osaka banker stands up after the lecture and announces that before he goes, he will commit \100 million to the investment pool.

Minato turns to us and smiles. We brought him good luck, and this was his third investor in as many weeks to confirm an interest.

Bringing the Tech to the Table

With the audience gone, we ask Minato what he plans to do to commercialize the technology. His game plan is simple and clear, he says. He wants to retain control, and he wants to commercialize the technology in Japan first -- where he feels he can ensure that things get done right. Why doesn't he go directly to the US or China? His experiences in both countries, he suggests, have been less than successful. "The first stage is critical in terms of creating good products and refining the technology. I don't want to be busy with legal challenges and IP theft while doing that."

Still, the export and licensing of the technology are on his agenda, and Minato is talking to a variety of potential partners in other countries.

Whereas another inventor might be tempted to outsource everything to a larger corporation, part of what drives Minato is his vision of social justice and responsibility. The 40,000 motors for the convenience store chain are being produced by a group of small manufacturers in Ohta-ku and Bunkyo-ku, in the inner north of Tokyo -- which is becoming a regional rust belt. Minato is seized with the vision of reinvigorating these small workshops that until the 80s were the bedrock of Japan's manufacturing and economic miracle. Their level of expertise will ensure that the quality of the motors will be as good as those from any major company.

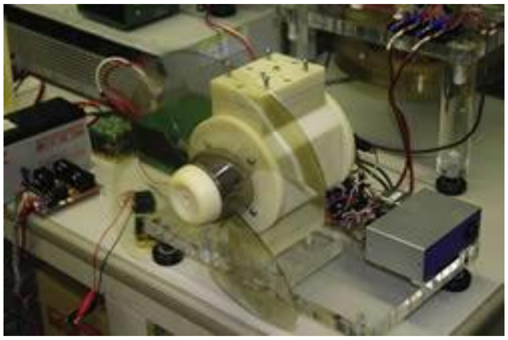

International Prep

Despite his plan to do things domestically first, Minato is well prepared for the international markets. He is armed with both six years of living and doing business in Los Angeles in the early 90s -- and with patent protection for over 48 countries. His is hardly a provincial perspective.
His US experience came after playing the piano for a living for 15 years. He began tinkering with his invention in the mid-70s. The idea for his magnetic motor design came from a burst of inspiration while playing the piano.

But Minato decided to drop everything in 1990 to help his daughter Hiroko, who at the age of 20 decided that she wanted to be a rhythm and blues star in the US. Minato is a strong believer in family: If Hiroko was going to find fame and fortune in the US, Dad had better be there to help manage her. He suceeded in helping Hiroko to achieve a UK dance chart number one hit in 1995.

In 1996 Minato returned to Japan and his magnetic motor project. The following year he displayed his prototypes to national power companies, government officials and others at a five-day conference in Mexico City. Interest was palpable, and Minato realized that his invention might meet a global need for energy-saving devices.

Subsequent previews and speeches in Korea and Singapore further consolidated his commitment to bringing the invention to fruition, and he was able to bring in several early-stage investors.

During the late 90s, Minato continued to refine his prototypes. He also stayed in constant contact with his lawyer, registering patents in major countries around the world. Through his experiences in the US he realized that legal protection was critical, even if it meant delaying release of the technology by a couple of years.

Ironically, by the time he'd won patents in 47 countries, the Japanese patent office turned him down on the grounds that "[the invention] couldn' t possibly work" and that somehow he was fabricating the claims.

But a few months later they were forced to recant their decision after the US patent office recognized his invention and gave him the first of two patents. As Minato notes: "How typical of Japan's small-minded bureaucrats that they needed the leadership of the US to accept that my invention was genuine."

By 2001, the Minatos had refined their motors and met enough potential investors to enter into a major international relationship, initially with a Saudi company, to be followed thereafter by companies in the US and elsewhere.

However, fate dealt the investors and Minato's business a serious blow when the World Trade Center was attacked in New York. The Saudis retreated, and Minato's plans fell back to square one.

Now Minato is once again ready to move. With the first order in the works and more orders pending successful prototypes, he has decided that investors don't have to be primary partners. He is actively accepting inquiries from corporate investors who can bring strategic advantages and corporate credibility with them. His company, Japan Magnetic Fan, will make a series of investment tie-up announcements in the first and second quarters of 2004.

Implications

Minato's motors consume just 20 percent or less of the power of conventional motors with the same torque and horsepower. They run cool to the touch and produce almost no acoustic or electrical noise. They are significantly safer and cheaper (in terms of power consumed), and they are sounder environmentally.

The implications are enormous. In the US alone, almost 55 percent of the nation's electricity is consumed by electric motors. While most factory operators buy the cheapest motors possible, they are steadily being educated by bodies like NEMA (National Electrical Manufacturers Association) that the costs of running a motor over a typical 20-year lifespan comprise a purchase price of just 3 percent of the total, and electricity costs of 97 percent. It is not unusual for a $2,000 motor to consume $80,000 of electricity (at a price of .06 cents per kilowatt hour).

Since 1992, when efficiency legislation was put into place at the US federal level, motor efficiency has been a high priority -- and motors saving 20 percent or so on electrical bills are considered highly efficient. Minato is about to introduce a motor which saves 80 percent, putting it into an entirely new class: The $80,000 running cost will drop to just $16,000. This is a significant savings when multiplied by the millions of motors used throughout the USA and Japan -- and eventually, throughout the world.

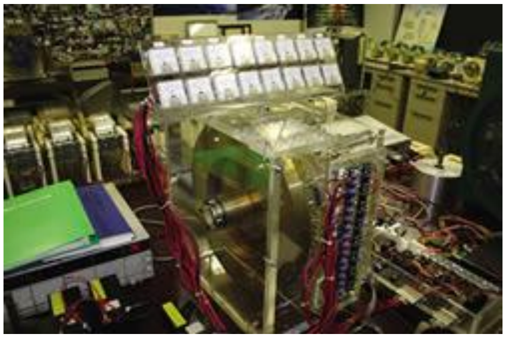

The Devices

Minato's invention and its ability to use remarkably less power and run without heat or noise make it perfect for home appliances, personal computers, cellphones (a miniature generator is in the works) and other consumer products.

The magnetic motor will be cheaper than a standard motor to make, as the rotor and stator assemblies can be set into plastic housings, due to the fact that the system creates very little heat. Further, with the motor's energy efficiency, it will be well suited for any application where a motor has limited energy to drive it. While development is still focused on replacing existing devices, Minato says that his motor has sufficient torque to power a vehicle.

With the help of magnetic propulsion, it is feasible to attach a generator to the motor and produce more electric power than was put into the device. Minato says that average efficiency on his motors is about 330 percent.

Mention of Over Unity devices in many scientific circles will draw icy skepticism. But if you can accept the idea that Minato's device is able to create motion and torque through its unique, sustainable permanent magnet propulsion system, then it makes sense that he is able to get more out of the unit than he puts in in terms of elctrical power. Indeed, if the device can produce a surplus of power for longer periods, every household in the land will want one.

"I am not in this for the money," Minato says. "I have done well in my musical career, but I want to contribute to society -- helping the backstreet manufacturers here in Japan and elsewhere. I want to reverse the trends caused by major multinationals. There is a place for corporations. But as the oil industry has taught us, energy is one area where a breakthrough invention like this cannot be trusted to large companies."

Minato was once close to making a deal with Enron. But today, he is firmly on a mission to support the small and the independent -- and to go worldwide with them and his amazing machine. "Our plan is to rally smaller companies and pool their talent, and to one day produce the technology across a wide range of fields."
Content provided by J@pan Inc. Magazine.

6.0.0.4. Magnetic Rotation Apparatus; USP # 4,751,486

(Cl. 335/272) (June 14. 1998); Mr. Kohei Minato

The magnetic rotation apparatus of the present invention has first and second rotors rotatably supported and juxtaposed. The first and second rotors are connected so as to be rotatable in opposite directions in a cooperating manner. A number of permanent magnets are arranged on a circumferential portion of the first rotor at regular intervals, and just as many permanent magnets are arranged on a circumferential portion of the second rotor at regular intervals. Each permanent magnet has one magnetic polarity located radially outward from the rotors, and has the other magnetic polarity located radially inward toward the rotors. The polarity of each permanent magnet, which is located radially outward from the rotors, is identical. When the first and second rotors are rotated in a cooperating manner, the phase of rotation of the permanent magnets of one rotor is slightly advanced from that of the permanent magnets of the other rotor. One of the permanent magnets of one rotor is replaced with the electromagnet. The radially outward polarity of the electromagnet can be changed by reversing the direction in which a current is supplied to the electromagnet.

TECHNICAL FIELD

The present invention relates to a magnetic rotation apparatus in which a pair of rotors are rotated by utilizing a magnetic force.

BACKGROUND ART

An electromotor is well known as a rotation apparatus utilizing a magnetic force. For example, an AC electromotor comprises a rotor having a coil, a stator surrounding the rotor, and a plurality of electromagnets, disposed on the stator, for generating a rotating magnetic field. An electric power must be constantly supplied to the electromagnets in order to generate the rotating magnetic field and keep the rotor rotating, i.e., an external energy, or electric energy, is indispensable for the rotation of the rotor.

Under the circumstances, a magnetic rotation apparatus, which employs permanent magnets in lieu of electromagnets and can rotate a rotor only by a magnetic force of the permanent magnets, is highly desirable.

The present application proposes a magnetic rotation apparatus which comprises a pair of rotors rotatable in opposite directions in a cooperating manner, and a plurality of permanent magnets stationarily arranged at regular intervals on the peripheral portion of each rotor. One end portion of each permanent magnet of both rotors, which has the same polarity, is located radially outward of the rotors. When the two rotors are rotated in a cooperating fashion, a permanent magnet on one rotor and a corresponding permanent magnet on the other, which form a pair, approach and move away from each other periodically. In this case, the phase of rotation of the magnet on one rotor advances a little from that of the corresponding magnet on the other rotor. When the paired permanent magnets approach each other, magnetic repulsion causes one rotor to rotate. The rotation of one rotor is transmitted to the other rotor to rotate the same. In this manner, other pairs of magnets on both rotors sequentially approach each other, and magnetic repulsion occurs incessantly. As a result, the rotors continue to rotate.

In the above apparatus, in order to stop the rotation of the rotors, a brake device is required. If an ordinary brake device is mounted on the magnetic rotation apparatus, the entire structure of the apparatus becomes complex, and a driving source for the brake device must be provided separately.

The present invention has been developed in consideration of the above circumstances, and its object is to provide a magnetic rotation apparatus including a brake device for suitably stopping the rotation of rotors.

DISCLOSURE OF THE INVENTION

The magnetic rotation apparatus of the present invention is provided with magnetic force conversion means which is substituted for at least one pair of permanent magnets of the paired rotors. In a normal state, the magnetic force conversion means causes a magnetic repulsion, as in the other pairs of permanent magnets. When it is intended for the rotors to stop, the magnetic force conversion means causes a magnetic attraction force. Since a magnetic attraction force can be produced between the rotors at any time, the magnetic attraction force serves to stop the rotors. The brake device constituted by the magnetic force conversion means differs from an ordinary brake device which forcibly stops a pair or rotors by using a frictional force. In the brake device of this invention, by converting a magnetic repulsion force to a magnetic attraction force, the rotors can be braked in the state that the movement of the rotors is reduced. Thus, the rotors can be stopped effectively.

BRIEF DESCRIPTION OF THE DRAWINGS

FIG. 1 is a schematic perspective view showing a magnetic rotation apparatus according to an embodiment of the invention;

F I G. 1

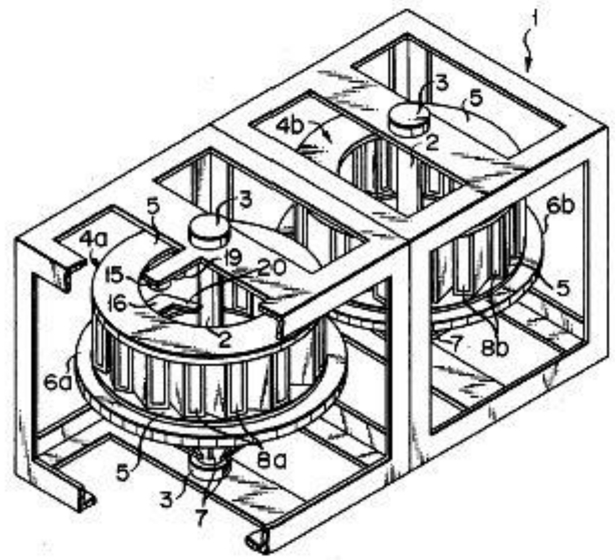

F I G. 2

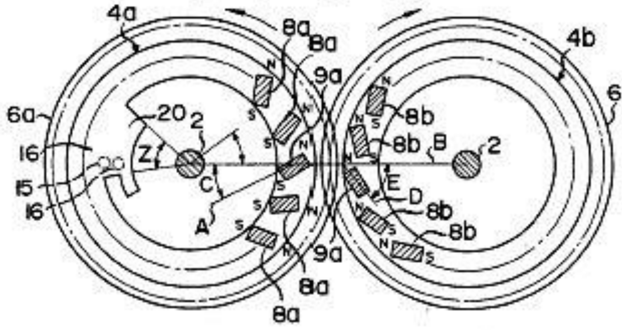

FIG. 2 is a schematic plan view showing the relationship between the first and second rotors;
FIG. 3 is a perspective view of a permanent magnet;

FIG. 3

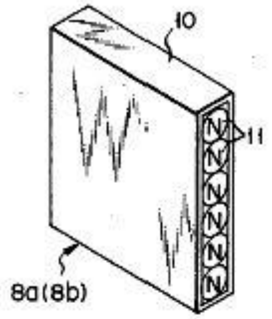

FIG. 4

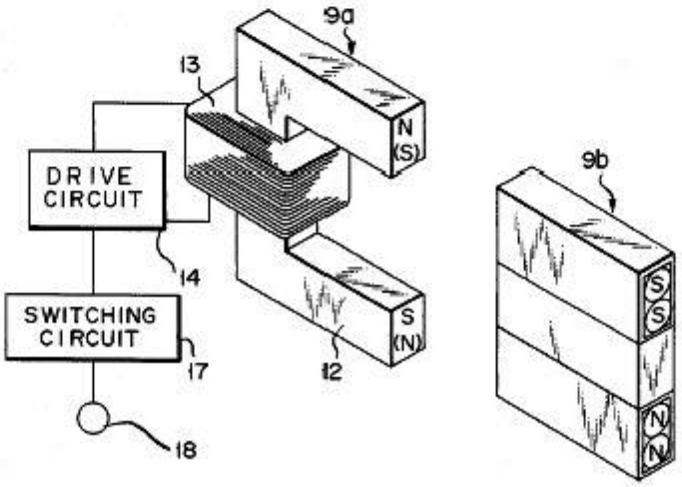

FIG. 4 shows an electromagnet, a permanent magnet cooperating with the electromagnet, and a driving circuit the electromagnet; and

FIG. 5 is a view for explaining how a pair of rotors rotate.

FIG. 5

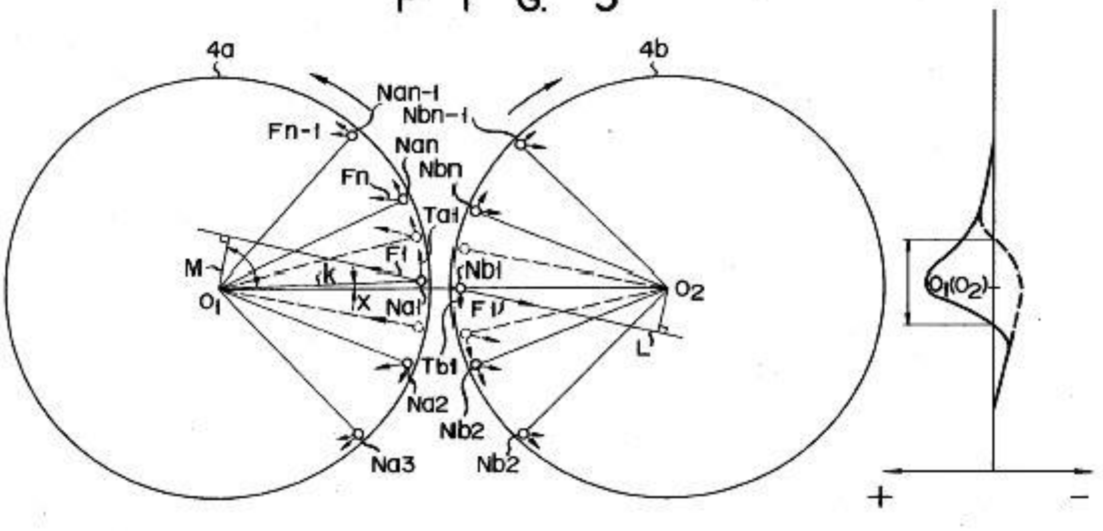

BEST MODE OF CARRYING OUT THE INVENTION

FIG. 1 shows a magnetic rotation apparatus embodying the present invention. The magnetic rotation apparatus has frame 1. Frame 1 is provided with a pair of rotation shafts 2 which extend vertically and in parallel to each other. Shafts 2 are located at a predetermined distance from each other. Upper and lower ends of each shaft 2 are rotationally supported on frame 1 via bearing 3.

First rotor 4a is mounted on one of rotation shafts 2, second rotor 4b is mounted on the other rotation shaft 2. First and second rotors 4a and 4b are arranged on the same level. Rotors 4a and 4b have similar structures. For example, each rotor 4a (4b) comprises two ring-shaped plates 5 which are spaced apart from each other in the axial direction of the rotation shaft 2.

Gears 6a and 6b made of synthetic resin are, as cooperating means, attached to lower surfaces of first and second rotors 4a and 4b. The diameters of gears 6a and 6b are identical but larger than those of rotors 4a and 4b. Gears 6a and 6b mesh with each other. First and second rotors 4a and 4b are thus rotatable in opposite directions in a cooperating manner. In FIG. 1, reference numeral 7 indicates support arms for supporting first and second rotors 4a and 4b.

For example, 16 magnets are arranged at regular intervals on a peripheral portion of first rotor 4a. These magnets are secured between two ring-shaped plates 5. In this embodiment, among the 16 magnets, one is electromagnet 9a (see FIG. 2), and the others are permanent magnets 8a. FIG. 2 shows only some of permanent magnets 8a.

As shown in FIG. 3, permanent magnet 8a comprises case 10, and a plurality of rod-like ferromagnetic members 11 housed in case 10. Ferromagnetic member 11 is, for example, a ferrite magnet. Ferromagnetic members 11 of each permanent magnet 8a are arranged such that ferromagnetic members 11 have the same polarity at one end. In first rotor 4a, for example, an N-polarity end portion of each permanent magnet 8a faces radially outward, and an S-polarity end portion of magnet 8a faces radially inward. As shown in FIG. 2, when each permanent magnet 8a is located between two shafts 2, angle C formed by longitudinal axis A of magnet 8a and imaginary line B connecting two shafts 2 is, for example, set to 30.degree. C. On the other hand, electromagnet 9a is, as shown in FIG. 4, constituted by U-shaped iron core 12, and coil 13 wound around core 12. Electromagnet 9a is arranged such that both N- and S-polarity end portions face radially outward of first rotor 4a, and the above-mentioned angle C is formed, similarly to the case of permanent magnet 8a.

The same number of permanent magnets (8b,9b) as the total number of all permanent magnets and electromagnet (8a,9a) of first rotor 4a are secured on a peripheral portion of second rotor 4b at regular intervals. In FIG. 2, when first and second rotors 4a and 4b are rotated in opposite directions, each permanent magnet of second rotor 4b periodically moves toward and away from the corresponding one of the magnets (8a,9a) of first rotor 4a.

The permanent magnets (8b,9b) of second rotor 4b will now be described in greater detail. Permanent magnets 8b of second rotor 4b, which periodically move toward and away from permanent magnets 8a of first rotor 4a in accordance with the rotation of rotors 4a and 4b, have a structure similar to that of permanent magnets 8a of first rotor 4a. The polarity of that end portion of each permanent magnet 8b which is located radially outward from second rotor 4b, is identical with that of the end portion of each permanent magnet 8a of first rotor 4a. That is, the radially outward portion of each permanent magnet 8b has an N-polarity.

Permanent magnet 9b of second rotor 4b, which periodically moves toward and away from electromagnet 9a of first rotor 4a, has a structure shown in FIG. 4. Permanent magnet 9b has a structure similar to that of permanent magnets 8a. Both polarities of electromagnet 9a face radially outward from first rotor 4a. Permanent magnet 9b has two different polarities which face radially outward from second rotor 4b and correspond to both polarities of electromagnet 9a.

As shown in FIG. 2, when each permanent magnet 8b,9b is located between two rotation shafts 2, angle E formed by longitudinal axis D of the magnet (8b,9b) and imaginary line B connecting two shafts 2 is, for example, set to 56.degree. C. In addition, when rotors 4a and 4b are rotated in opposite directions, as shown by arrows, the magnets (8a,9a) of first rotor 4a move a little ahead of the corresponding permanent magnets (8b,9b) of second rotor 4b, in a region in which both magnets (8a,9a; 8b,9b) approach one another. In other words, the phase of rotation of the magnets (8a,9a) of first rotor 4a advances by a predetermined angle in relation to the permanent magnets (8b,9b) of second rotor 4b.

As shown in FIG. 4, electromagnet 9a of first rotor 4a is electrically connected to drive circuit 14. Drive circuit 14 includes a power source for supplying an electric current to coil 13 of electromagnet 9a. While rotors 4a and 4b rotate, drive circuit turns on electromagnet 9a upon receiving a signal from first sensor 15 only when electromagnet 9a and permanent magnet 9b are in a first region in which they periodically approach each other. First sensor 15 is an optical sensor comprising a light-emitting element and a light-receiving element. As shown in FIG. 1, first sensor 15 is attached to a portion of frame 1 above first rotor 4a. First sensor 15 emits light in a downward direction. The light is reflected by reflection plate 16 projecting radially inward from the inner edge of first rotor 4a. First sensor 15 receives the reflected light, and feeds a signal to drive circuit 14. Thus, drive circuit 14 turns on electromagnet 9a.

The circumferential length of reflection plate 16 is equal to that of the above-mentioned first region. When magnets 9a and 9b enter the first region, first sensor 15 is turned on, and when they leave the first region, first sensor 15 is turned off. When drive circuit 14 receives a signal from first sensor 15, it excites electromagnet 9a such that both polarities of electromagnet 9a correspond to those of permanent magnet 9b of second rotor 4b.

Drive circuit 14 is electrically connected to switching circuit 17. When brake switch 18 is operated, switching circuit 17 reverses the direction in which an electric current is supplied to electromagnet 9a. When the current supplying direction of drive circuit 14 is reversed, drive circuit 14 excites electromagnet 9a only in a time period in which drive circuit 14 receives a signal from second sensor 19. Second sensor 19 has a structure similar to that of first sensor 15, and is attached to frame 1 so as to be located closer to the center of rotor 4a than first sensor 15. Reflection plate 20, which corresponds to the position of second sensor 19, is formed integral to an inner edge portion of reflection plate 16. As shown in FIG. 2, compared to reflection plate 16, reflection plate 20 extends in rotational direction of first rotor 4a, indicated by the arrow.

The operation of the above-described magnetic rotation apparatus will now be explained with reference to FIG. 5.

In FIG. 5, rotation shaft 2 of first rotor 4a is denoted by 01, and rotation shaft 2 of second rotor 4b is denoted by 02. Only the radially outward polarity, that is, N-polarity, of the magnets of rotors 4a and 4b is shown, for the sake of convenience. Although electromagnet 9a and permanent magnet 9b have both polarities located radially outward, only the N-polarity thereof is shown.

When first and second rotors 4a and 4b are put in a position shown in FIG. 5, magnetic pole Nb1 of one permanent magnet of second rotor 4b is located in a line connecting shafts 01 and 02. In this case, polarity Na1 of first rotor 4a, which is paired with polarity Nb1, is a little advanced from polarity Nb1 in the rotational direction of first rotor 4a. For example, as shown in FIG. 5, magnetic pole Na1 is advanced from polarity Nb1 by an angle of X.degree.. Polarities Na1 and Nb1 exert repulsion force F1 upon each other along line L. Supposing that an angle, formed by line M, which is drawn from shaft 01 perpendicularly to line L, and the line connecting shafts 01 and 02 is represented by Y, and that the length of line K is represented by R, torques Ta1 and Tb1 caused by repulsion force F1 to rotate first and second rotors 4a and 4b can be given by:

Ta1=F1.multidot.R.multidot.cos (Y-X)
Tb1=F1.multidot.R.multidot.cos Y
Since cos (Y-X)>cos Y, Ta1>Tb1.

As shown in FIG. 5, since magnetic pole Na1 is advanced from magnetic pole Nb1 by angle X.degree., first rotor 4a receives a greater torque than second rotor 4b. Thus, first rotor 4a forwardly rotates in the direction of the arrow in FIG. 5.

Mention is now made of paired magnets of rotors 4a and 4b in the vicinity of magnetic poles Na1 and Nb1. Magnetic poles Nan and Nan-1 of first rotor 4a are advanced ahead of magnetic pole Nal in the rotational direction. Magnetic poles Nan and Nan-1 receive a torque produced by a repulsion force acting between magnetic poles Nan and Nan-1 and corresponding magnetic poles Nbn and Nbn-1. In FIG. 5, magnetic poles Nan and Nan-1 receive a smaller torque, as they rotate farther from the location of magnetic pole Na1. It is well known that a torque of first rotor 4a, which is caused by a repulsion force acting on magnetic poles Nan and Nan-1, is decreased in inverse proportion to the square of the distance between paired magnetic poles Na and Nb.

Magnetic poles Na2 and Na3, behind magnetic pole Na1, receive a torque which tends to rotate rotor 4a in the reverse direction. This torque is considered to be counterbalanced with the torque acting on magnetic poles Nan and Nan-1.

In FIG. 5, attention should be paid to the region of magnetic poles Na1 and Na2. As first rotor 4a forwardly rotates, the direction in which a torque applies to magnetic pole Na2, is changed from the reverse direction to the forward direction, before magnetic pole Na2 reaches the position of magnetic pole Na1. The torque for forwardly rotating rotor 4a is larger than that for reversely rotating rotor 4a. Therefore, first rotor 4a is easily rotated in the direction shown in FIG. 2.

Second rotor 4b is considered to receive a torque in a direction reverse to the direction shown in FIG. 2, as seen from the description of first rotor 4a. It is obvious that second rotor 4b receives a maximum torque at the position of magnetic pole Nb1. As seen from the above formula, torque Tb1 applied to second rotor 4b in a direction reverse to that denoted by the arrow is smaller than torque Ta1 applied to first rotor 4a in the forward direction. The rotation of first rotor 4a is transmitted to second rotor 4b through gears 6a and 6b. By determining the relationship between the strengths of torques Ta1 and Tb1, second rotor 4b is thus rotated in a direction reverse to the rotational direction of first rotor 4a, against the torque applied to second rotor in the direction. As a result, first and second rotors 4a and 4b are kept rotating, since a torque for rotating rotors 4a and 4b in a cooperating manner is produced each time magnetic poles Na of first rotor 4a pass across the line connecting shafts 01 and 02.

In a diagram shown in the right part of FIG. 5, a solid line indicates a torque applied to first rotor 4a, and a broken line indicates a torque applied to second rotor 4b. The ordinate indicates a distance between each magnetic pole and the line connecting shafts 01 and 02 of rotors 4a and 4b. The first region in which electromagnet 9a of first rotor 4a is turned on is set in a range of Z during which a torque is applied to first rotor 4a in the forward direction.

In order to stop the cooperative rotation of rotors 4a and 4b, brake switch is turned on to operate switching circuit 17. Thus, the direction in which drive circuit 14 supplies a current to electromagnet 9a is reversed. The polarities of electromagnet 9a are reversed. The torque applied to electromagnet 9a in the forward direction is stopped. When electromagnet 9a approaches permanent magnet 9b, a magnetic attract:on force is produced. As a result, the rotation of rotors 4a and 4b is effectively slowed down and stopped. Since the second region, in which electromagnet 9a is excited, is larger than the first region, a large braking force can be obtained from a magnetic attraction force.

In the above embodiment, since electromagnet 9a is excited only in a specific region, a large electric power is not required. In addition, since electromagnet 9a rotates and brakes rotors 4a and 4b, a braking mechanism for a magnetic rotation apparatus can be obtained without having to make the entire structure of the apparatus complex.

The present invention is not restricted to the above embodiment. With the exception of the paired electromagnet and permanent magnet, all permanent magnets of the rotors are arranged such that their end portions of the same polarity face radially outward from the rotors. However, it is possible that the polarities of the radially outward end portions of the permanent magnets are alternately changed. Namely, it should suffice if the polarities of the radially outward end portions of the first rotor are identical to those of the corresponding radially outward end portions of the second rotor. The magnets may have different magnetic forces. Furthermore, an electric power for exciting the electromagnet can be derived from the rotation of the rotors or from the revolving magnetic field of the permanent magnet.

Angles C and E are not restricted to 30.degree. and 56.degree.. They may be freely determined in consideration of the strength of the magnetic force of the permanent magnet, a minimum distance between adjacent magnets, angle x, and the like. The number of magnets of the rotor is also freely chosen.

Industrial Applicability ~

As described above, the magnetic rotation apparatus of the present invention can be used as a driving source in place of an electric motor, and as an electric generator.

6.0.0.5. Magnetic Rotating Apparatus; US Patent # 5,594,289; January 14, 1997;

Kohei Minato

On a rotor which is fixed to a rotatable rotating shaft, a plurality of permanent magnets are disposed along the direction of rotation such that the same magnetic pole type thereof face outward. In the same way, balancers are disposed on the rotor for balancing the rotation of this rotor. Each of the permanent magnets is obliquely arranged with respect to the radial direction line of the rotor. At the outer periphery of the rotor, an electromagnet is disposed facing this rotor, with this electromagnet intermittently energized based on the rotation of the rotor. According to the magnetic rotating apparatus of the present invention, rotational energy can be efficiently obtained from permanent magnets. This is made possible by minimizing as much as possible current supplied to the electromagnets, so that only a required amount of electrical energy is supplied to the electromagnets.

BACKGROUND OF THE INVENTION

The present invention relates to a magnetic rotating apparatus, and more particularly, to a magnetic rotating apparatus which utilizes repulsive forces produced between a permanent magnet and an electromagnet.

Description of the Prior Art

In a conventional electric motor, an armature as a rotor consists of turns of wires, and electric field as a stator consists of a permanent magnet. In such the conventional electric motor, however, current must be usually supplied to windings of the armature which is rotated. When the current is supplied, heat is generated, which gives rise to the problem that not much driving force is efficiently generated. This, in turn, gives wise to the problem that the magnetic forces cannot be efficiently obtained from the permanent magnet.

In addition, in the conventional electric motor, since the armature is so constructed as consisting of the windings, the moment of inertia cannot be made very high, so that enough torque cannot be obtained.

To overcome the above-described problems of such the conventional electric motor, the inventor proposed, in Japanese Patent Publication No. 61868/1993 (U.S. Pat. No. 4,751,486) a magnetic rotating apparatus in which a plurality of the permanent magnets are disposed along the two rotors, respectively, at a predetermined angle, and in which an electromagnet is disposed at one of the rotors.

In a generally constructed conventional electric motor, there is a limit as to how much the efficiency of energy conversion can be increased. In addition, the torque of the electric motor cannot be made high enough. For the above reasons, hitherto, various improvements have been made on existing electric motors, without any success in producing an electric motor so constructed has providing satisfactory characteristics.

In the magnetic rotating apparatus disclosed in Japanese Patent Publication No. 6868/1993 (U.S. Pat. No. 4,751,486) a pair of rotors is rotated. Therefore, it is necessary for each of the rotors to have high precision, and in addition, measures must be taken for easier rotation control.

SUMMARY OF THE INVENTION

In view of the above-described problems, the object of the present invention is to provide a magnetic rotating apparatus in which rotational energy can be efficiently obtained from the permanent magnet with a minimum amount of electrical energy, and in which rotation control can be carried out relatively easily.

According to one aspect of the present invention, there is provided a magnetic rotating apparatus comprising a rotating shaft; a rotor which is fixed to the rotating shaft and which has disposed thereon permanent magnet means and means for balancing rotation, the permanent magnet means being disposed such that a plurality of magnetic poles of one (or first) polarity type is arranged along an outer peripheral surface in the direction of rotation, and a plurality of magnetic poles of the other (or second) polarity type arranged along an inner peripheral surface, with each pair of corresponding magnetic poles of one and the other polarities obliquely arranged with respect to a radial line; electromagnet means, which is disposed facing this rotor, for developing a magnetic field which faces the magnetic field of the permanent magnet means of the rotor and detecting means for detecting rotating position of the rotor to allow the electromagnet means to be energized.

According to another aspect of the present invention, there is provided a magnetic rotating apparatus comprising a rotating shaft a rotor which is fixed to the rotating shaft and which has disposed thereon a plurality of permanent magnets and balancers for balancing rotation, the permanent magnets being disposed such that one magnetic polarity type is arranged along an outer peripheral surface in the direction of rotation and the other magnetic polarity type arranged along an inner peripheral surface, with each pair of corresponding magnetic poles of one and the other polarities obliquely arranged with respect to a radial line; an electromagnet, which is disposed facing this rotor, for developing a magnetic field which produces the other magnetic polarity type on the facing surface; and energizing means for intermittently energizing the electromagnet means from where the leading permanent magnet, based on the rotation of the rotor, passes the facing surface of the electromagnet in the direction of rotation.

According to still another aspect of the present invention, there is provided magnetic rotating apparatus comprising a rotating shaft; a first rotor which is fixed to the rotating shaft and which has disposed thereon permanent magnet means and means for balancing rotation, the permanent magnet means being disposed such that a plurality of magnetic poles of the second polarity type is arranged along an outer peripheral surface in the direction of rotation, and a plurality of magnetic poles of the first pole type arranged along an inner peripheral surface, with each pair of corresponding magnetic poles of one and the other polarities obliquely arranged with respect to a radial line; a second rotor which rotates along with the first rotor and is fixed to the rotating shaft, having disposed thereon a plurality of permanent magnets and balancers for balancing rotation, the permanent magnets being disposed such that one magnetic polarity type is arranged along an outer peripheral surface in the direction of rotation and the other magnetic polarity type arranged along an inner peripheral surface, with each pair of corresponding magnetic poles of one and the other polarities obliquely arranged with respect to a radial line a first and a second electromagnet means, which are magnetically connected and disposed facing the first and second rotors, respectively, for developing a magnetic field which faces the magnetic field of the permanent magnet means of the first and second rotors; and detecting means for detecting rotating position of the rotors to allow the electromagnet means to be energized.

The nature, principle and utility of the invention will become more apparent from the following detailed description when read in conjunction with the accompanying drawings.

BRIEF DESCRIPTION OF THE DRAWINGS

In the accompanying drawings:

FIG. 1 is a perspective view schematically illustrating a magnetic rating apparatus according to one embodiment of the present invention

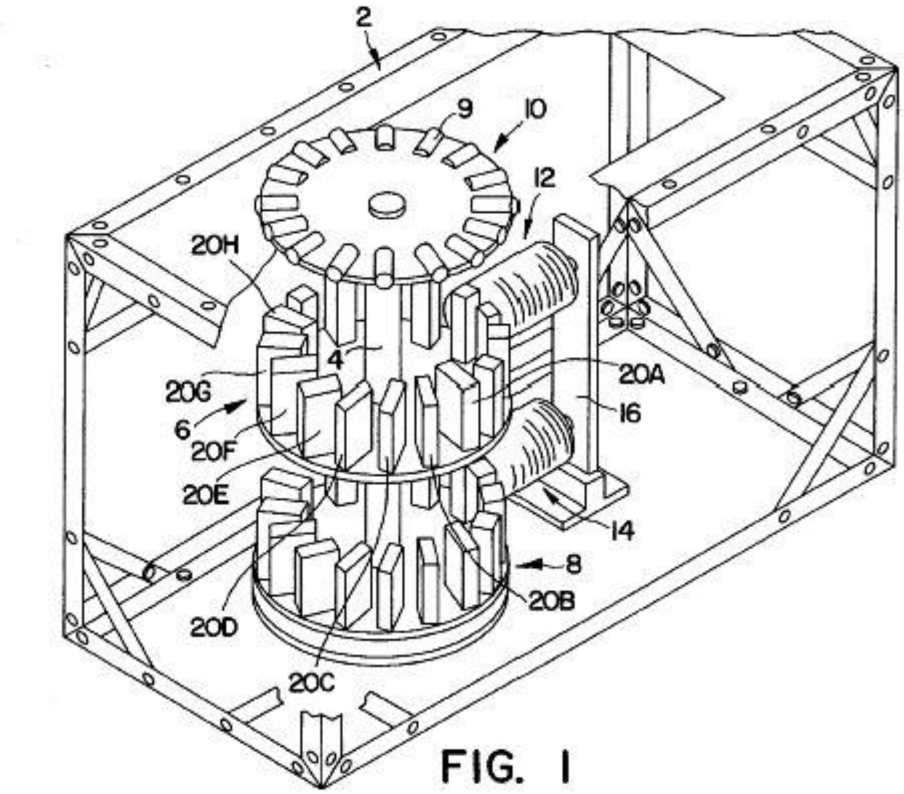

FIG. 1

FIG. 2 is a side view of the magnetic rotating apparatus illustrated in FIG. 1;

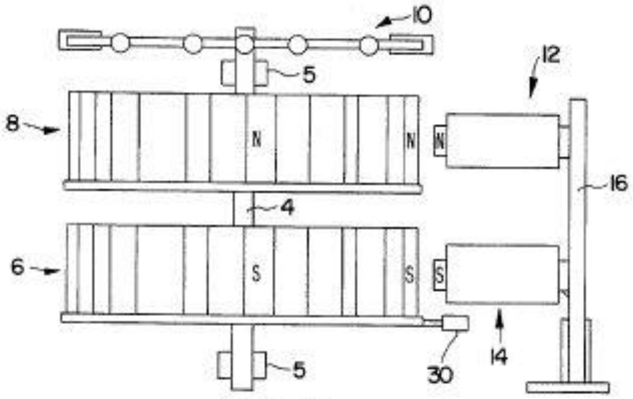

FIG. 2

FIG. 3 is a plan view of a rotor of the magnetic rotating apparatus illustrated in FIGS. 1 and 2;

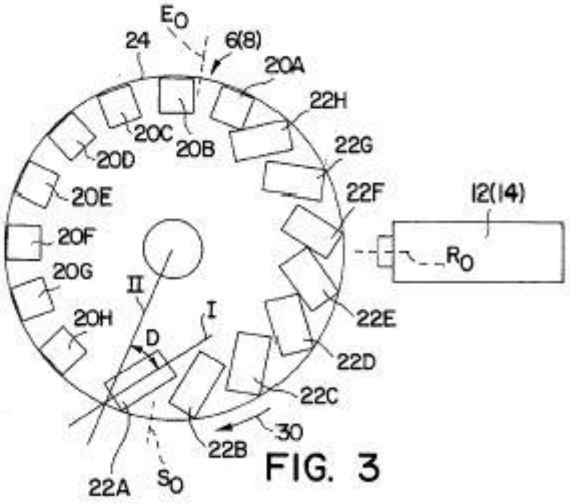

FIG. 3

FIG. 4 is a circuit diagram illustrating a circuit in the magnetic rotating apparatus shown in FIG. 1;

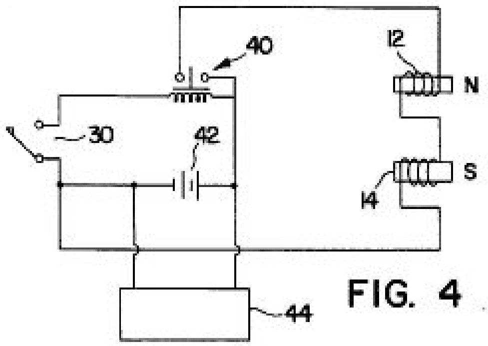

FIG. 4

FIG. 5 is a plan view showing a magnetic field distribution formed between the rotor and the electromagnet of the magnetic rotating apparatus shown in FIGS. 1 and 2, and
FIG. 6 is an explanatory view illustrating a torque which causes rotation of the rotor of the magnetic rotating apparatus shown in FIGS. 1 and 2.

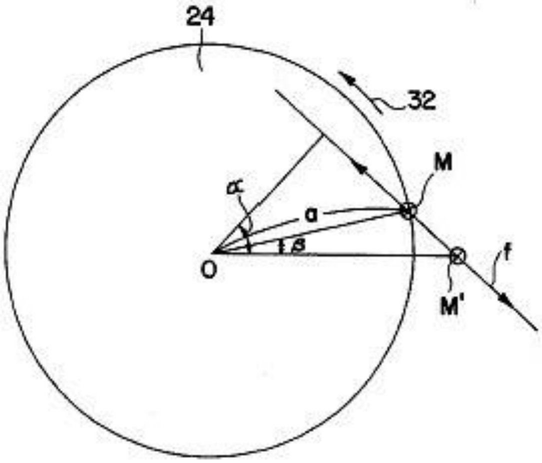

FIG. 6

DESCRIPTION OF THE PREFERRED EMBODIMENTS

The magnetic field developed by an electromagnet means and that of a permanent magnet means of a rotor repel each other. In addition, the magnetic field of the permanent magnet means is flattened by the magnetic fields of other nearby permanent magnets and electromagnet means. Therefore, a torque is produced therebetween to efficiently rotate the rotor. Since the rotor has a high inertial force, when the rotor starts rotating, its speed increases by the inertial force and the turning force.

A magnetic rotating apparatus related to one embodiment of the present invention will be described with reference to the following drawings.

FIGS. 1 and 2 are schematic diagrams of a magnetic rotating apparatus related to one embodiment of the present invention. In the specification, the term "magnetic rotating apparatus" will include an electric motor, and from its general meaning of obtaining turning force from the magnetic forces of permanent magnets, it will refer to a rotating apparatus utilizing the magnetic forces. As shown in FIG. 1, in the magnetic rotating apparatus related to one embodiment of the present invention, a rotating shaft 4 is rotatably fixed to a frame 2 with bearings 5. To the rotating shaft 4, there are fixed a first magnet rotor 6 and a second magnet rotor 8, both of which produce turning forces and a rotated body 10, which has mounted therealong a plurality of rod-shaped magnets 9 for obtaining the turning forces as energy. They are fixed in such a manner as to be rotatable with the rotating shaft 4. At the first and second magnet rotors 6 and 8, there are provided, as will be described later in detail with reference to FIGS. 1 and 2, a first electromagnet 12 and a second electromagnet 14 respectively are energized in synchronism with rotations of the first and second magnet rotors 6 and 8, both of which face each other and are each disposed in a magnetic gap. The first and second electromagnets 12 and 14 are respectively mounted to a yoke 16, which forms a magnetic path.

As shown in FIG. 3, the first and second magnet rotors 6 and 8 each have disposed on its disk-shaped surface a plurality of tabular magnets 22A through 22H for developing a magnetic field for generating the turning forces and balancers 20A through 20H, made of non-magnetic substances, for balancing the magnet rotors 6 and 8. In the embodiments, the first and second magnet rotors 6 and 8 each have disposed along the disk-shaped surface 24 at equal intervals the eight tabular magnets 22A through 22H along half of the outer peripheral area and +the eight balancers 20A through 20H along the other half of the outer peripheral area.

As shown in FIG. 3, each of the tabular magnets 22A through 22H are disposed so that its longitudinal axis 1 makes an angle D with respect to a radial axis line 11 of the disk-shaped surface 24. In the embodiment, an angle of 30 degrees and 56 degrees have been confirmed for the angle D. An appropriate angle, however, can be set depending on the radius of the disk-shaped surface 24 and the number of tabular magnets 22A through 22H to be disposed on the disk-shaped surface 24. As illustrated in FIG. 2, from the viewpoint of effective use of the magnetic field, it is preferable that the tabular magnets 22A through 22H on the first magnet rotor 6 are positioned so that their N-poles point outward, while the tabular magnets 22A through 22H on the second magnet rotor 8 are positioned so that their S-poles point outward.

Exterior to the first and second magnet rotors 6 and 8, the first and second electromagnets 12 and 14 are disposed facing the first and second magnet rotors 6 and 8 respectively in the magnetic gap. When the first and second electromagnets 12 and 14 are energized, they develop a magnetic field identical in polarity to the their respective tabular magnets 22A through 22H so that they repel one anther. In other words, as shown in FIG. 2, since the tabular magnets 22A through 22H on the first magnet rotor 6 have their N-poles facing outwards, the first electromagnet 12 is energized so that the side facing the first magnet rotor 6 develops an N-polarity. In a similar way, since the tabular magnets 22A through 22H on the second magnet rotor 8 have their S-poles facing outwards, the second electromagnet 14 is energized so that the side facing the tabular magnets 22A through 22H develops a S-polarity. The first and second electromagnets 12 and 14, which are magnetically connected by the yoke 16, are magnetized so that the sides facing their respective magnet rotors 6 and 8 are opposite in polarity with respect to each other. This means that the magnetic fields of the electromagnets 12 and 14 can be used efficiently.

A detector 30, such as microswitch, is provided to either one of the first magnet rotor 6 or second magnet rotor 8 to detect the rotating position of the magnet rotors 6 and 8. That is, as shown in FIG. 3, in a rotational direction 32 of the tabular magnets 22A through 22H, the first and the second magnet rotors 6 and 8 are respectively energized when the leading tabular 22A has passed. In other words, in the rotational direction 32, the electromagnet 12 or 14 is energized when starting point So, located between the leading tabular magnet 22A and the following tabular magnet 22B coincides with the center point Ro of either the electromagnet 12 or 14. In addition, as illustrated in FIG. 3, in the rotational direction 32 of the tabular magnets 22A through 22H, the first and the second magnet rotors 6 and 8 are de-energized when the last tabular magnet 22A has passed. In the embodiment, an end point Eo is set symmetrical to the starting point So on the rotating disk-shaped surface 24. When the end point Eo coincides with the center point Ro of either the electromagnet 12 or 14, the electromagnet 12 or 14 is de-energized, respectively. As will be described later, with the center point Ro of the electromagnet 12 or 14 arbitrarily set between the starting point So and the end point Eo, the magnet rotors 6 and 8 start to rotate when the electromagnets 12 and 14 and their tabular magnets 22A through 22H face one another. When a microswitch is used as the detector 30 for detecting the rotating position, the contact point of the microswitch is allowed to slide along the surface of the rotating disk-shaped surface 24. A step is provided for the starting point So and the end point Eo so that the contact of the microswitch closes between the starting point So and the end point Eo. The area along the periphery therebetween protrudes beyond the other peripheral areas of the rotating disk-shaped surface 24. It is apparent that a photo sensor or the like may be used instead of the microswitch as the detector 30 for detecting the rotating position.

As shown in FIG. 4, the windings of the electromagnets 12 and 14 are connected to a DC power source 42 through a movable contact of a relay 40, which is connected in series with the windings. A series circuit containing the relay 40 (solenoid) and the detector 30 or microswitch is connected to the DC power source 42. In addition, from the viewpoint of energy conservation, a charger 44 such as a solar cell is connected to the DC power source 42. It is preferable that the DC power source 42 is constantly chargeable using solar energy or the like.

In the magnetic rotating apparatus illustrated in FIGS. 1 and 2, a magnetic field distribution shown in FIG. 5 is formed between the tabular magnets 22A through 22H, disposed on each of the magnet rotors 6 and 8, and the electromagnets 12 and 14 which face them, respectively. When the electromagnet 12 or 14 is energized, a magnetic field of a tabular magnet of the tabular magnets 22A through 22H, adjacent to the electromagnet 12 or 14, is distorted in the longitudinal direction in correspondence with the rotational direction. This results in the generation of a repulsive force therebetween. As is apparent from the distortion of the magnetic field, the repulsive force has a larger component in the longitudinal or perpendicular direction, and produces a torque, as shown by an arrow 32. Similarly, a magnetic field of a tabular magnet of the tabular magnets 22A through 22H, which next enters the magnetic field of the electromagnet 12 or 14, is distorted. Since it moves toward an opposite pole of the preceding tabular magnet of the tabular magnets 22A through 22H, its magnetic field is distorted to a larger extent, and thereby flattened. This means that the repulsive force produced between the tabular magnets of the tabular magnets 22A through 22H, which have already entered the magnetic field of the electromagnets 12 or 14, is larger than the repulsive force developed between the next-entering tabular magnets of the tabular magnets 22A through 22H and the electromagnets 12 or 14. Accordingly, a turning force, shown by the arrow 32, acts upon the rotating disk-shaped surface 24. The rotating disk-shaped surface 24, having been imparted thereto turning force, continues to rotate due to inertial forces, even when it has been de-energized after the end point Eo has coincided with the center point Ro of the electromagnet 12 or 14. The larger the inertial force, the smoother the rotation.

At the initial stage of the rotation, an angular moment, as that shown in FIG. 6, is imparted to the rotating disk-shaped surface 24. That is, at the start of the rotation, as shown in FIG. 6, when the pole M of a tabular magnet is slightly displaced in the rotational direction from the pole M' of an electromagnet, a repulsive force operates between both of the poles M and M' of the tabular magnet at the rotating side and the electromagnet at the stationary side, respectively. Therefore, from the relationship illustrated in FIG. 6, an angular torque T is generated based on the formula: T=F. a.cos (.alpha.-.beta.), where in a is a constant. The angular torque starts the rotation of the rotating disk-shaped surface 24. After the rotating disk-shaped surface 24 has started rotating, its rotating speed gradually increases due to an inertial moment thereof, which allows a large turning driving force to be produced. After a stable rotation of the rotating disk-shaped surface 24 has been produced, when a necessary electromotive force can be developed in an electromagnetic coil (not illustrated) by externally bringing it near a rotated body 10 to be rotated along with the rotating disk-shaped surface 24. This electric power can be used for other applications. This rotating principle is based on the rotating principle of the magnetic rotating apparatus already disclosed in Japanese Patent Publication No. 61868/1993 (U.S. Pat. No. 4,751,486) by the inventor. That is, even if an electromagnet, provided for one of the rotors of the magnetic rotating apparatus disclosed in the same Patent Application, is fixed, it is rotated in accordance with the rotating principle disclosed therein. For details, refer to the above Japanese Patent Publication No. 61868/1993 (U.S. Pat. No. 4,751,486).

The number of tabular magnets 22A through 22H is not limited to "8" as shown in FIGS. 1 and 3. Any number of magnets may be used. In the above-described embodiment, although the tabular magnets 22A through 22H are disposed along half of the peripheral area of the disk-shaped surface 24, and the balancers 20A through 20H are disposed along the other half of the peripheral area, the tabular magnets may further be disposed along other areas of the disk-shaped surface 24. It is preferable that balancers, in addition to magnets, are provided along a portion of the peripheral area on the disk-shaped surface. The counter weights, which do not need to be formed into separate blocks, may be formed into one sheet of plate which extends on the outer peripheral area of the disk-shaped surface. In addition, in the above-described embodiments, while the construction is such as to allow the electromagnets to be energized for a predetermined period of time for every rotation of the rotating disk-shaped surface, the circuit may be so constructed as to allow, upon increased number of rotations, energization of the electromagnets for every rotation of the rotating disk-shaped surface, starting from its second rotation onwards. Further, in the above-described embodiment, a tabular magnet has been used for the permanent magnet, but other types of permanent magnets may also be used. In effect, any type of magnet may be used as the permanent magnet means as long as a plurality of magnetic poles of one type is disposed along the outer surface of the inner periphery and a plurality of magnetic poles of the other type are disposed along the inner peripheral surface of the disk-shaped surface, so that a pair of corresponding magnetic poles of one and the other polarities is obliquely arranged, with respect to the radial line 11, as shown in FIG. 3.

Although the tabular magnets 22A through 22H are mounted on the magnet rotors 6 and 8 in the above embodiment, they may be electromagnets. In this case, the electromagnets 12 and 14 may be the alternative of electromagnets or permanent magnets.

According to the magnetic rotating apparatus of the present invention, rotational energy can be efficiently obtained from permanent magnets. This is made possible by minimizing as much as possible current supplied to the electromagnets, so that only a required amount of electrical energy is supplied to the electromagnets.

It should be understood that many modifications and adaptations of the invention will become apparent to those skilled in the art and it is intended to encompass such obvious modifications and changes in the scope of the claims appended hereto.

6.0.0.6. Hokei Minato

Korean Magnetic Perpetual Motion Wheel

I must apologize for not having all the details of this interesting device but will update the file when I get more info from the source. In email communications with John Schnurer, I happened to mention it and he's been on me since then to send him a diagram, yet I felt like it would simply be confusing because its operation is not clear or readily apparent from the information I had.The information that I have comes directly from long time friend Henry Curtis of Colorado. We both attended the 1997 ISNE conference in Denver and Henry was telling about this interesting machine he had seen while on a trip to the Phillipines. He said there was a free energy conference held there and he noticed a spinning bicycle wheel that was attached to a stand that sat on a table.The wheel was running when he first saw it, yet there did not appear to be any driving force such as a motor, belts, gears, etc..Henry said he watched it for quite awhile and it never stopped running. On expressing curiosity about the wheel, he was invited to stop it and start it up without any outside assistance.Henry reports the wheel was brought to a complete stop, then he gave it a spin with his hand and it began moving on its own. I am uncertain if it followed the tendency of other such devices to establish its own speed. Some devices like this can be spun up to high speed from an outside source, then will slow to a speed which is determined by the geometry and strength of the repelling or attracting forces that operate it.Henry swears it was the neatest thing he'd ever seen and drew a crude diagram of the arrangement on my notepad. Unfortunately, we were a bit rushed and I did not achieve a complete understanding of how it operated. That is why I did not want to blow smoke about it until more detail had been received, god knows, we don't need any more of that.However, perhaps someone can figure it out from the limited information I do have. The following drawing shows the wheel arrangement, one half was weighted, the other half had slanted magnets. I do not know whether they are all repelling, attracting or a mix of these forces.

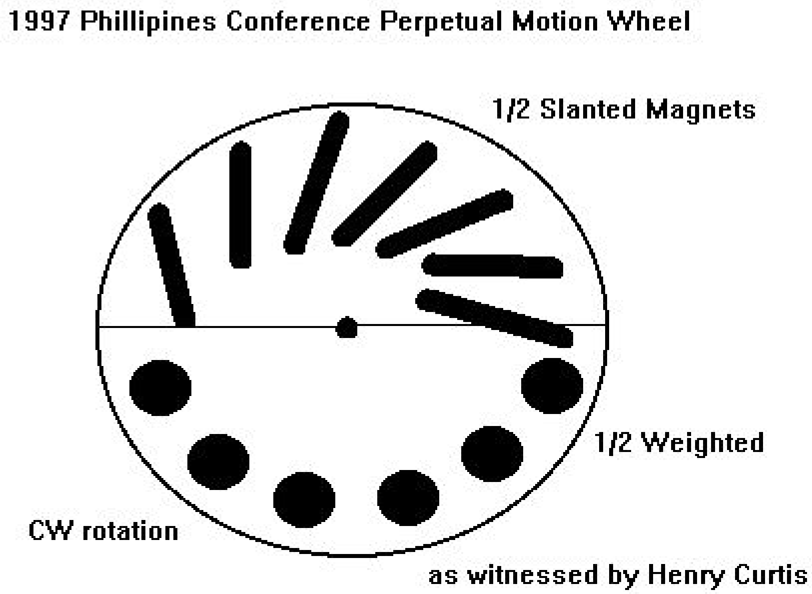

As you can imagine, the weight of the magnets must equal the weight of the other half of the wheel to balance out. Apparently the force of the magnetic repulsion or attaction provides the actual imbalance.Henry also said there was a patent on this device that is dated January 14, 1997. The inventor is a Japanese man named Minatu. The spelling of this name is uncertain. I did a search on the IBM server but found nothing even remote. Henry specifically said this was a United States patent. So, here it is. Perhaps Henry can come up with some more detail which can be used to update this file in future. Good luck....

KeelyNet: Update and Corrections from Henry Curtis (Wed, 19 Nov 1997) ~

From: Henry Curtis ~ To: Jerry Decker

Subject: Bicycle wheel correction and update Jerry, Again we see that communication is difficult and memories are fallable. Obviously I am remiss in not having sent this to you months ago as I intended to, but as a sage of old observed "The spirit is willing, but the flesh is slow." During the first weekend of May, 1997, a group in Soeul, Korea headed up by Mr. Chi San Park, held The First International New Energy Conference in Seoul, Korea. I attended this conference and gave a talk on various approcahes to free energy. It was at this conference in Seoul, Korea that I saw the bicycle wheel and had the opportunity to work with it unattended by anyone else.The inventor is Kohei Minato, a Japanese rock musician, who reports that he has spent a million dollars out of his own pocket developing magnetic motors, because the world needs a better source of energy. He has several patents in various countries. His latest patent that I am aware of is United States Patent # 5,594,289. His development efforts have gone in the general direction of the Adams motor which the above patent is similar to. He had a working prototype of this design at the conference and reported that it used 150 watts power input and produced

450 watts output on a sustained basis. About a year ago CNN (in the US) had a 10 minute segment about him and his motors. In this video he is shown demonstrating two of his magnetic motors. I have a copy of this film clip that he gave to me. I will make a copy and send it to you. Unfortunately, the editors were not attuned to technical details and the pictures of the running machines show little useful detail. The Phillipine connection that you mention is completely erroneous. It was in Korea. The drawing on the web site is essentially correct with the following exceptions. The counter weight is a single curved piece of aluminum covering 180 degrees. Each of the several individual magnets on the other half of the wheel are slightly asymmetric, crescent shaped and nested. They are magnetised end to end with the N poles out. The motor is actuated by moving the N pole of a large permanet magnet (the drive magnet) toward the wheel. As this magnet is moved toward the wheel, the wheel starts to spin. As the magnet is moved closer to the wheel it spins faster. The acceleration of the wheel is rapid. So rapid in fact, as to be startling. To put it another way I was very impressed. The motor works. And it works very well. In the film clip a slight pumping action of Minato's hand holding the magnet is apparent. When I braced my hand so that there was no pumping action, the motor still ran. In fact it seemed to run better. Pumping action by the hand held magnet is not the power that drives the motor. When the drive magnet is moved away from the wheel it coasts rather quickly to a stop and comes to rest in a manner typical of any spinning bicycle wheel. Again when the wheel is at rest and a large magnet is moved up to the wheel it starts to spin. At no time is it necessary to touch the wheel to get it to rotate. Simply bring the N pole of a large magnet several inches from the wheel. The particular orientation of the wheel when it is at rest seems to have no effect on how well it starts to turn. Irrespective of how the wheel and the magnets on it are sitting; move the drive magnet near, it starts to spin. Move the magnet closer it spins faster. Move the magnet further away it slows up. The wheel was mounted on a stand made of aluminum angle pieces bolted together similar to the diagram in the above mentioned patent. The axle of the wheel was mounted parellel to the surface of the planet. I have attached a rough diagram of the wheel. Apparently the geometry of the magnets on the wheel is very important and subtle. I have built several small models none of which have shown the free energy effects of Minato's machine. The conference in Seoul was attended by several hundred people, most appeared to be under 40 and evenly divided between men and women. Presenters were from Korea, US, Japan, and China. Simultaneous translation was provided for all talks in the 3 day conference. Jerry, I hope this information is useful. I may be contacted by e-mail at Henry Curtis or

KeelyNet: Email from Gene Mallove at Infinite Energy ~

I spoke to Bob Vermillion of Tri-Cosmos Development (Los Angeles, CA 310-284-3250 or fax 310-284-3260) today, just before he left for the three-day demonstrations of the Minato magnetic motor being held in Mexico City, Mexico on July 8, 9, 10th.Three (3) Minato Motors (MM), covered by US Patents # 5,594,289 (Jan 14, 1997) and # 4,751,486 (June 14, 1988), have been brought over from Japan. One was allegedly tested last evening by Grupo Bufete Industrial (supposedly one of the largest power generation construction companies in Mexico and South America). The company engineers were said (by Vermillion) to have measured an output /input ratio of 4.3 / 1. The printed literature, which I received in a Fedex packet from Vermillion states that the device can put out 500 watts (maximum) with an input of 34 watts.For those of you who wonder why the device is not self-sustaining -- oral info from Vermillion is that Minato *will* in the course of one of the demonstrations *remove the battery power supply* and let the device self-run -- presumably with a load. The press release makes no bones about the physicsbusting character of the MM: "As rotations per minute (rpm's) increase, the electromagnetic consumption of the stator decreases. This phenomenon is in direct conflict with accepted laws of physics and is achieved through the repelling magnetic fields. It operates without heat, noise, or pollution of any kind. It can be produced in size from ultra-small to very large." It is said in the press release that applications from cell phones to laptop computers are under development. Vermillion told me of other parties who were planning to attend the demonstrations, which will be conducted both in public displays and with private party measurements. These include: ENRON, Bechtel, Tejas (a division of Shell Oil Corporation), Fluor Daniels, Kellogg Corp. .He told me that Hal Fox of New Energy News and the Fusion Information Center will be there (I confirmed with Hal that he will be there and will give us a full report.) I considered going myself (I was invited), but I trust Hal Fox to provide a full report -- he should be back this weekend. Mr. Kohei Minato will be there -- he has already arrived, I understand. He hand carried one of the motors that was already tested yesterday. The wealthy Japanese individual who owns Tri-Cosmos Dev. Co. is Mr. Charly Fujiki. Attendance is by invitation only, but let me here provide the Grupo Bufete numbers: (723-45-78 and Fax 723-47-18 in Mexico City). The exhibition will be in the Grupo Bufete Industrial building.The invitation says: "Mr. Minato, the inventor, will be present to explain and demonstrate his remarkable breakthrough in technology to government and business leaders in Mexico. He will also discuss the possible use (and) application for various other industries, including a giant generator project, based on the principal mechanism being displayed."Daily demonstrations are from 10:30 am to Noon, 4:30 to 5:30 pm and 6 to 7:30 pm. A block diagram of the motor indicates that it is about 500 kg. An arrow indicates that its 500 watt output goes to a load -- schematically indicated as an array of light bulbs. The unit is within a cube 1.2 meters on edge.The diagram shows a solar panel(!!) providing input to the battery that powers the device - I supposes for completeness, but that is obviously silly in view of the claim. Vermillion assured me that this solar panel was not an essential part of the system. One of the two color brochures in the package shows the Minato motor with its charactersitic coils that have their pole faces toward the perimeters of permanent magnet containing wheels that are stacked on an axle. If you look at the thing quickly, you'd think you were looking at a steam turbine. The 1997 patent #5,594,289 states in its abstract: "On a rotor which is fixed to a rotatable rotating shaft, a plurality of permanent magnets are disposed along the direction of rotation such that the same magnetic pole type therof face outward. In the same way, balancers are disposed on the rotor for balancing rotation of this rotor. Each of the permanent magnets is obliquely arranged with respect to the radial direction line of the rotor. At the outer periphery of the rotor, an electromagnet is disposed facing this rotor, with this electromagnet intermittently energized based on the rotation of the rotor.According to the magnetic rotating apparatus of the present invention, rotational energy can be efficiently obtained from permanent magnets. This is made possible by minimizing as much as possible current supplied to the electromagnets, so that only a required amount of electrical energy is supplied to the electromagnets." It will be interesting, indeed, to learn what comes out of this.Perhaps the famous white rabbit disappearing down a hole, or maybe the birth of a revolution? We shall see.

Best wishes, r. Eugene F. Mallove, Editor-in-Chief Infinite Energy Magazine Cold Fusion Technology, Inc. P.O. Box 2816 Concord, NH 03302-2816 Ph: 603-228-4516 ~ Fax: 603-224-5975 editor@infinite-energy.com

KeelyNet: Response from STAG group on Minato Wheel (12-04-97) ~

To: Jerry From: David

Subject: Re: Howdy! Thanks for your mail regarding Minato's Rotation Aparatus. My apologies for the slight delay in replying. Yes, please feel free to put up a link to our site and the photos. I should explain that our group is not in any way conected with Mr. Minato himself. The group STAG is run by foreign scientists who are living in Japan with the aim of distrubuting information between themselves, improving links between Japan and the UK (and elsewhere) and of course to have the odd beer or two. We hold meetings every couple of months and invite speakers to speak on interesting or topical subjects. Mr. Minato was one of the speakers who gave a presentation at one of our meetings. Hence the pictures. I also heard about the Korean conference, and saw a significant report written about it in the conference proceedings (albeit in Korean!). I think it would be really good if other people did produce similar devices. I will pass your comments on to Mr. Minato. He did have a Web page, (in Japanese) with information on it, but I haven't been able to connect to it recently. Thanks again for your mail. Regards,
David Heard, Vice Chairman, STAG

At 02:46 21/11/97 -0800, you wrote:

Hello from Texas! A friend told me he saw the bicycle wheel version at a Korean conference so I posted all the details at KeelyNet...one of our readers found your site and informed me, so I will put up a link to your photos.... Do you think there will be full details on how to build the simple self-running bicycle version posted so that others can duplicate it....this would really set it off if these things were being shown all over the world.... I got copies of the three patents (two by Minato, one by Gavaletz) and have their locations posted on my page....thanks for providing the pictures....I don't think it go bigtime until at least a simplified version that self-runs has beend duplicated by many others....this will set the fire that will draw attention to the rest.....good luck, I and a lot of others will be watching....and please congratulate Mr. Minato on his achievement....if you would like to check out our site; http://www.keelynet.com/index0.htm
http://www.keelynet.com/gravity/curtis.htm (the device file)

Jerry W. Decker / jdecker@keelynet.com http://www.keelynet.com
Dr. David Heard 73-1 Kashiwa Functional Device Labs. ~ Sharp Corporation Kashiwa, Chiba 277 Japan Tel. : 0471-34-6116 ~ Fax. : 0471-34-6119 e-mail : david@kasiwa.sharp.co.jp

From: Michael Randall ~ To: Bill Beaty (www.eskimo.com) ~ December 4, 1997
"Minato is going Big-Time!"

Subject: Minato's PPM Update Vortexians: Here is an update on Kohei Minato's over-unity permanent magnet inventions. Minato is currently having manufactured, over in Japan, a large unit, (4) connected 10 foot long units, that can power 30 homes. It is estimated to be finished by February. CNN is scheduled to report on it when ready. Minato also has a home powering unit. Both size units are based on his USA Patent 5,594,289 that uses a battery to start and stop the unit. The USA sales representative is Bob Vermillion and his e-mail address is:
polenetic@aol.com

No web site yet but Bob Vermillion's office is in Century City, California and he said he can answer your technical, marketing, and manufacturing questions. He just came back from

visiting Minato's lab in Japan and was impressed seeing the units working versus seeing the photo's. A power demonstration unit to is expected to arrive from Japan in January. There currently is no USA manufacturing being done and licenses are available worldwide. I mentioned to Bob that there is also a large interest for a permanent magnet rotor/stator unit that is self-rotating and self-starting, like Minato's bicycle wheel design. I also mentioned that a table top version of this, for the student or as an "executive toy," would sell quite well. He didn't know this. If any of you do e-mail to Bob for info, mention to him about the need for a table top version of the bicycle wheel and where you got his address!
Regards, Michael Randall

From: Michael Randall ~ To: freenrg-l@eskimo.com (Bill Beaty), March 4, 1998 ~

"Minato Demo and Update"

Here is an 3/4/98 update on Kohei Minato's over-unity permanent magnet inventions from his USA sales representative's Bob Vermillion and John Kenworthy.Mr. Minato demonstrated at the Japanese "Energy Expo '98" his large unit, (4) connected 10 foot long units that can power 30 homes, and several smaller table top units. CNN, NHK and other TV networks took video's of his devices, and of the whole Expo, but he did not know when it was re-broadcasted. Minato's staff had their own video on for the four day event and Bob is making copies of a typical single day video coverage. There were not any instruments connected to the large unit to measure energy input to output but his table top unit was connected and it showed 48 Watts input to 550 Watts output. Minato's demonstration attracted a lot of public attention by the large daily crowds and also from a number of interested Japanese corporations. Bob said he received all of your e-mail's and took them back with him to Japan and gave a copy to Mr. Minato and his staff to show the interest here in the USA and the world. He has not replied to all of your e-mail's due to there is nothing to report about just yet and he will answer all of your e-mail's when he has at least a demonstration unit to show. They are still waiting for a table top power demonstration unit for their Los Angeles office but the Japanese engineer's want to perfect it first. Bob is looking forward to receiving a magnetic "bicycle wheel" unit in April and interested parties can then schedule an appointment to see the wheel spinning by itself without any energy input! :-)
Regards, Michael Randall

New Energy News 6(3): 1 (July 1998): Press Release

Institute for New Energy (INE)

"The Magnetic Rotating Apparatus"

[If the following Press Release is reporting factual information that can be verified, then this may be the first commercial over-unity rotating, magnetic new-energy device. The first western hemisphere demonstration will be given in Mexico City in early July, 1998.

Inventor Kohei Minato, the Thomas Edison of the new millennium, has acquired more than 50 patents and intellectual property rights from all over the world for the energy creating "Magnetic Rotating Apparatus." Mr. Minato's generating device utilizes the magnetic force of repulsion to create and emerge clean safe energy.

The "Magnetic Rotating Apparatus" employs a number of stationary neodymium magnets arranged at regular intervals on the peripheral portion of a rotor. The polarity of each magnet, which is located radially outward from the rotor, is identical. The machine is started with an electromagnetic stator. When activated, the magnetic fields repel creating rotation of the rotor. As the rotations per minute (rpm's) increase, the electrical consumption to the electromagnetic stator decreases. This phenomenon is in direct conflict with accepted laws of physics and is achieved through the repelling magnetic fields. It operates without heat, noise or pollution of any kind. It can be produced in size from ultra small to very large.

One of the prototypes available for viewing operates with an input of 34 watts of electricity and outputs a maximum of 500 watts. "Magnetic Rotating Apparatus" applications currently under development include usage from cell phones and laptop computers to automobiles and giant power stations.

For more information contact: ri-Cosmos Development Co. 888 Century Park East ~ 19th Floor Century City, CA 90067 hone: 310-284-3250 ~ Fax: 310-284-3260 -mail: tricodev@aol.com

Minato Magnet Motor Bicycle Wheel Demonstration Model

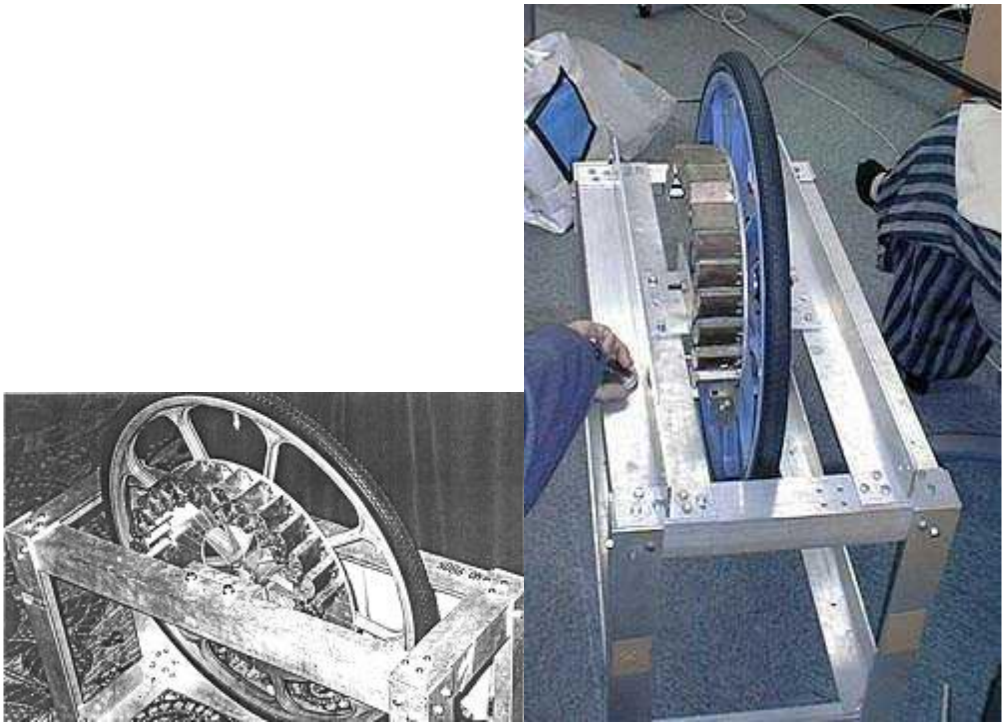

Static & Turning (w/ Actuator @ Top of Wheel)

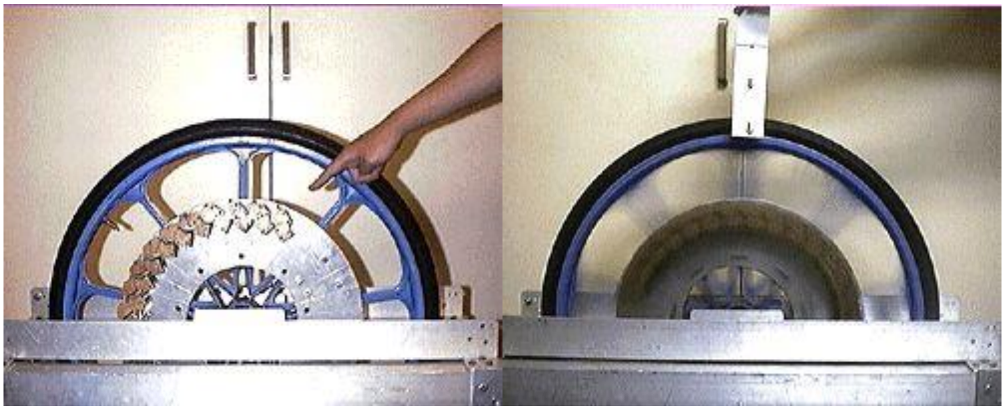

6.0.0.7. Magnogen Motor

- 480 HP Magnetic Powered Motor turning at 4,800 RPM
- Requires mechanical startup
- Suggested use: Transportation
- Special magnets needed to retard the generation of spark

This motor could revolutionize the transportation industry. At 480HP with no pollution, we could improve the quality of our transportation and the environment as well. This is not too good to be true! We must stop limiting our potential as a species and see beyond the poisonous technology we hold so dearly. Explore this unit, marvel at it's design and imagine quiet transportation and clean skies.

It is appropriate to briefly discuss the question 'What is Magnetism?' Many visionaries from the past have chosen the WORD ‘Magnetism’, to explain the many different workings of the Universe. It is important to define magnetism as a total variety of energies.

The word "magnetism" denotes an attraction between varying energies, thus it best describes the basic force of nature which is attract-attract. The energy of the Universe is a constant, and it is correct to state that magnetism is a constant. When we focus on just HOW magnetism is a constant, it is best to know that EVERYTHING is made of magnetic molecular structures. The total Universe IS magnetism. It never needs to travel to or from somewhere because it is already there. It is where it is attracted at a nearly infinite velocity. All light in the Universe is a form of transmuted magnetic energy. If we identify a particular location where the point of transference starts (for example, a particular star) this light energy is magnetically CONVEYED at a velocity that cannot be described within our present framework which locks in time and space. Thus, magnetism does not NEED or HAVE a point of no return. This ENERGY is the Universe which is always transmuting with 100 percent efficiency.

Magnetism can be used as "MAGNETIC CURRENT". Fifty years ago, Dr. Ehrenhaft stated, "It is purely magnetic force which permeates throughout the known Universe." Printed in Nature, January 4, 1941, Dr. Ehrenhaft stated, "There must also be a STATIONARY MAGNETIC FIELD in the beam of LIGHT with potential differences since SUPERPOSED MAGNETIC FIELDS accelerate or retard the MAGNETO-PHOTOPHORESIS. It can be observed that some particles stay at rest and that their motion commences suddenly, or that moving particles appear to change their velocity and even reverse it. This is due to changes of CHARGE. The movement of magnetic ions in a homogeneous magnetic field is a MAGNETIC CURRENT."

When Faraday had become world famous for his invention of the dynamo (about 1850) he was not satisfied with his limited success. Faraday wrote the following after testing the first magnet powered generator, "There is a wheel in the physical mechanism of the action that is missing, whereby electricity (energy) should be derived from MAGNETISM without the expenditure of mechanical energy."

Additional comments about magnetism are: magnetic current is an energy that can flow through a wire, it can jump a gap and change form, it can be conducted through air and space, it can take on an infinite variety of polarities, it will not shock the body but make it numb depending on the intensity, it flows when it is attracted to something, it can produce matter or break down matter in the right conditions, it can produce force fields, it can assist in momentum, it can assist in particle detection up close or far away, it can produce heat and cold in the right conditions, it can enhance or detract from literally any energy form, it can be polarized into fields that can serve an infinite number of purposes, it does not deplete the earth's atmosphere like electricity, it occurs in various levels throughout nature, it can be monitored like electricity but it is not the same, nature does not produce electricity - it produces magnetic current that can be measured as electricity, magnetic current can move at a nearly infinite velocity, and it can be altered by the elements it interacts with - this is why the composition of the magnets is so very important - the composition or the elements determine the characteristics of the magnetic current, magnetic fields can unlock molecular bonds, magnetic fields bind each molecule together with a unique polarity with similar polarities attracting and forming larger structures, magnetism is a constant - always present and always changing, magnetic energy exists everywhere - there is no "space" ,gravity is compressed magnetism that can be intensified or alleviated.

Finally, magnetism can manifest as NEUTRAL. In the year 1885, a physicist, C.A. Bjerkness, had the idea that energy could be explained as small spheres that pulsate at some unknown universal frequency. The positive result of his theory is that if the pulsation’s are in phase, the particles attract according to the inverse square law. If they are out of phase completely, they repel according to this same law. The same pertains if they are halfway between being completely in or out of phase, they are then neutral. Bjerkness was talking about neutral magnetism. Neutral magnetism can become an infinite number of polarities. That is how all magnetic units function, they change neutral magnetism into different magnetic polarities that perform specific functions as they interact with certain hardware. There are magnetism’s in the Universe that have only been minutely utilized by our societies, and discovering these magnetic energy forms will greatly enhance our lives and help our planet thrive.

To understand the workings of the Magnogen motor, we need to do our best to review the sequence of events for each revolution. We will attempt to trace the circuit flow. But first the magnetic flow should be understood as being DIFFERENT than an electrical flow. As we know, electricity sparks and argues, short circuits, etc. The strength of the ATTRACT pull determines the amount of magnetic flow. A magnetic current only goes WHERE it is needed and HOW it is needed to cause a desired result. It is of paramount importance to know that magnetism travels with an INTERACTION going in BOTH DIRECTIONS SIMULTANEOUSLY. This action is a set LAW OF NATURE totally activated within a CAUSE and EFFECT process.

We will look at the motor BEFORE it is ready for start-up. The magnetic fields inside are already in a vast number of motions, all waiting to GET TO WORK the moment spin charging begins. For the sake of pulse COUNTING we pick a single rotation when the Motor is already doing work by turning the output shaft. As we select a START point for one single rotation of 360 degrees, we can then COUNT the magnetic pulses which DO happen.

Let us focus on a start point where the control brush from the generator is contacting magnet coil commutator bar #52. The generator winding's pulsing is the FIRST countable magnetic action. Each of the 84 generator magnets pulses TWICE for movement of one generator slot. The count of pulsing for one rotation then is 2 times 84 magnets times 104 slots equals 17,472. Next, the same action happens with the 84 driver magnets as they respond to 118 driver winding slots. This pulse counting is 2 times 84 times 118 which equals 19,824. To this point we have 37,296 pulses for one rotation. Next, the generator control brush in one single rotation activates a total of 16 magnet coils. These coils get a jolt of magnetic current in what is called groups of two with only one coil being activated during a given moment. The next coil of the group is activated instantly after the first. These groups of two are always activated at a distance of about 180 degrees apart.

At this point in time, we next identify the DIFFERENCES between the pulses. All smaller pulses ACCUMULATE to become part of LARGER PULSES. For example, the pulsing of the magnet coils are MASSIVE as compared to the pulsing of the generator and driver pulses. Next, we note there are smaller pulses between the forty-two rows of magnets, as each of the four magnets in line top to bottom accumulate pulses in a calliope action. This creates an elongated magnetic field pulse which eventually arrives at a given MAGNETIC speed. This charge is ready to be attracted to an attract structure. The attract location is to any combination of the magnet coils which have pulsed 180 degrees across from each other. When this massive pulse crosses through the winding assemblies, we find the pulse is NOT to the magnet coils at their MOMENT of pulsing, but after pulsing.

To explain, spaced between the pulsing of any group of magnet coils, are spacer magnet commutator bars which go under the control brush but are not completing the circuit. These varying number of OFF BARS create a time frame when the coil's magnet CHARGE is available for an attract polarity change. Thus the space gap of 4 inches, (the distance between the outer magnet pulse and the magnet coils) is crossed directly through the generator and driver windings as one massive magnetic pulse shock.

So, next we add these so called POWER PULSES to the total number of pulses for one 360 degree rotation and arrive at the following totals, 37,296 + 16 magnets coils, + 8 large calliope pulses equals 37,320. These pulses are caused to happen (because of the changing number of OFF bars) at RANDOM INTERVALS. Any one row of the 42 rows of magnets might pulse to any CLOSE BY magnet coil with basically only eight of the large pulses for a 360 degree rotation of the shaft. These massive PRIMARY pulses respond as a SHOCK condition which reaches OUTSIDE of the motor to the ionosphere. Thus we find the calliope action (up and down) to each of the 42 rows of magnets happens in a random order. When understanding universal PULSING, we must know the RANDOMNESS IS THE ORDER.

The magnet coil pulsing occurs when the control brush from the generator contacts Bar 52 (see print), the magnetic charge goes into magnet coil #8. Then instantly (when contacting Bar 51), into magnet coil #5 located about 180 degrees across. The circuit is completed to any one of the three magnet coil brushes which have their shunt wire wrapped around with clean .020 inch thick copper wire. Viewing the print shows this thin copper wire is wrapped around the generator and driver shunt wires with three loops. This is a crucial bit of knowledge which must be understood. This wire wrapping circuit is the MAJOR separation between an electrical and magnetic flow. If the unit DID generate ANY volts, a short circuit would happen at the first contact to this thin copper wire. This fact shows the flow is MAGNETIC, and each of the four locations (of 3 loops) gets to share in completing the magnetic flow.

For future study, the pulse is listed as follows:

Bar 52 - ON to Coil 8
Bar 51 - ON to Coil 5
Bars 50, 49, 48, 47 are OFF
Bar 46 ON to Coil 7
Bar 45 ON to Coil 4
Bars 44, 43, 42, 41 and 40 are OFF
Bar 39 ON to Coil 6
Bar 38 ON to Coil 3
Bars 37, 36, 35, and 34 are OFF
Bar 33 ON to Coil 5
Bar 32 ON to Coil 2
Bars 31, 30, 29, 28 and 27 are OFF
Bar 26 ON to Coil 4
Bar 25 ON to Coil 1
Bars 24, 23, 22, and 21 are OFF
Bar 20 ON to Coil 3
Bar 19 ON to Coil 8
Bars 18, 17, 16, 15, and 14 are OFF
Bar 13 ON to Coil 2
Bar 12 ON to Coil 7
Bars 11, 10, 9 and 8 are OFF
Bar 7 ON to Coil 1
Bar 6 ON to Coil 6
Bars 5, 4, 3, 2, and 1 are OFF

The OFF bar pattern then is four, five, four, five, four, five, four and five. These OFF bars add up to 36 and when added to the 16 USED bars from the magnet coils, we have a total of 52 bars.

It is difficult to take what is stated and to then expand this pulsing information to the full understanding of the motor’s actions. The action being called a pulse is actually a CHANGE of magnetic POLARITY.

The more complete understanding of magnetism is to first learn the CAUSES which result in a change of magnetic polarity.

An analogy that is very helpful is the color spectrum whereby we see basic colors combine to form new colors; and so it is with magnetism as new magnetic structures form to create varying magnetic fields. However, there are basic differences between ALL magnetism's: a) the particular magnet's composition, b) the magnetic intensity, and c) the pulse rate. If all or only ONE change takes place, the POLARITY is affected.

The release condition (to the ionosphere) happens ONLY after the pulse has had its momentum built up and accelerated by being pulled (every which way) until the PROPER magnetic release speed is attained.

With a constant output shaft speed, it would appear that the energy is NOT random. While the pulse is not a one, two, three counting order, the Universe operates in a PATTERN AS NEEDED WHILE REPEATING IN A RANDOM SEQUENCE.

480 HP MAGNOGEN MOTOR PARTS LIST:

1) Aluminum base plate l" thick by 29-l/4"OD
2) Vertical outer wall made of 81% aluminum and l9% magnesium, measuring 17-1/4" high, 27-3/4" ID, 29-1/4" OD. This wall as knurled on the inside from top to bottom.
3) A delrin ring measuring 27-3/4" OD by 25-3/4" ID by 1/2" thick. This ring is bolted to part #2. This ring has 168 holes, 7/32" diameter by 1-3/16" deep.
4) A delrin ring measuring 27-3/4" OD by 22-5/8" ID by 1 - 1/4" thick. This ring is bolted to Part #2. This ring has 252 holes measuring 7/32" in Diameter Spaced for the full 360 degrees.
5) A carbon ring located on top part #4. This ring measures 27-1/2" OD by 25-7/8" ID by 1-1/4" thick. This ring has 252 holes measuring 7/32" in dia. Spaced for 360 degrees. These holes are a matching set to part #4. The inside diameter has 42 rounded shapes which are pulse points.
6) A carbon ring located on top of part #3 measuring 27-3/8"OD by 25-1/2" ID, by 3/8" thick. This ring has 168 holes 7/32" dia. made to match holes in Part #3. These holes are the same spacing pattern as the outer holes of parts #4 and #5. The inside diameter has 42 rounded shapes which are pulse points.
7) Are 168 rods, 13-5/8" long, 7/32" thick made of hardened aluminum alloy.
8) 84 magnets for driver winding, measuring 3/8" thick by 1" wide by 1-1/2" long, Magnets made of 58% iron, 37% neodymium, 4% ferrous sulfate, 1% boron
9) Are 84 window frames which hold parts #8. Each of these frames are held in place by 4 rods, Parts #7. There are two of these rods on the sides of each magnet and these rods are slid into 7/32" holes in this part which are located at the side edges of the magnets. (See drawing.) These frames have a .010" thick by 1/8" wide ledge, front, back and bottom allowing the magnets to be inserted from the top only. The material for these frames is 81% aluminum and 19% magnesium. Thus the total support for parts #8 are these 168 rods, as these rods hold in place these window type frames. The air space around each magnet is as important as the magnet itself. Without this space the magnets lose their energy over time. The method of supporting the magnets results in both sides of the magnets being clear of any obstruction.

10) Are pieces of acrylic tubing having a 7/32" inside diameter. These tubes are used as spacers between and above the magnets to serve as stops which hold the frames #9 and magnets #8 in place.

11) Are 84 rods, 7-3/16" long by 7/32"dia. Held in place by inserting them into holes at the inner diameters of parts #4 and #5.

12) Is a ring made of 8l% aluminum and 19% magnesium measuring 22-3/4" ID by 23-3/4" OD by 3/8" thick. This ring has 84 holes measuring 7/32" dia. which are used to support the bottom location of rods #11.

13) 84 magnets for generator winding measuring 3/8"thick by l" wide by 1-1/4" long made of the same material as Part #8

14) Are 84 window frames to hold parts #l3. There are two rods located on the side of each magnet. Thus, these frames are different than frames #9 because each frame, with its magnet is held in place by only two side rods, part #11. These frames and magnets are also held in place by pieces of 7/32" dia. acrylic tubing. NOTE: The frames make contact to the magnets as well as to the rods. These frames complete a magnetic flow which is a circuit that includes the actual energy which is caused to flow by the frames materials. These frames are charged because of their location, which is between powerful magnets.

15) Fourteen copper square pieces 1/4" spaced around for 360 degrees. These copper squares serve as a magnetic boundary between the two magnets and they balance a field. These pieces are centered at the driver housing with a 1/32"clearance from Part#16.

16) Casting for driver housing is 26" OD, 13" high with 24-1/2" ID. Casting is made of 72% copper. 9-1/3% nickel, 9-1/3% manganese, and 9-1/3% magnesium. The magnets #8 clear this casting by 5/32" space distance. To pour driver housing we use 72% copper, 9-1/3% nickel, 9-1/3%manganese and 9-l/3% magnesium. The driver casting is to be 10% less weight than the generator casting, 197 pounds for the generator and 177.3 pounds for the driver. To melt elements for the driver casting, start by melting the highest to the lowest by dropping down, then add, then drop down again. No vacuum is being used; however, before adding the magnesium, drop down as low as possible, being careful to not let the blended materials solidify. In this manner, the chances of causing the magnesium to react to an unwanted degree are minimized.

17) Explanation for 5/32" space: The magnets need to be further away from the driver casting because magnetism needs to manifest as an attract pole with space for the molecular energy to manifest its field.

18) Secured to the lower extension of Part #16 are 44 rounded contacts made of 7.8% magnesium to a ratio of 2.5% nickel. These contacts are located to have a .002" clearance from the inner contacts of part #5. They are 3/8" in dia. shaped as shown on the 90 degree section.

19) Casting for generator housing measures 22-3/4" OD by 11-1/4" high by 8-1/2"ID made of 42% zinc, 25% copper, 9.25% sulfur, 9% magnesium, and 2% tin. The Magnets #13 clear this casting by 1/16 space distance. As the generator allows a magnetic energy flow to leave, through a giving it up process, the return flow is guided and directed by a magnetic molecular interchange; the function that is controlled, to a point, by the weight and composition of the two alloys as they interact to each other. Rods #7 and 11 aid in this molecular interchange process. This sharing of fields, up to down or down to up in

each row causes a calliope effect to the magnetic energy flow traveling vertically as the magnetic rotary response happens.

20) Are 44 rounded contacts made of 7.8% magnesium to a ratio of 2.5% nickel. These contacts are located to have a .002" clearance from the inner contacts of Part #5. As contacts #18 pulse to Part #6 they pulse at the same moment as these contacts pulse to #5. This action sets up a magnetic pulse rate which aids in the total magnetic flow.
21) Are two mica rings secured to Part #2 located at the outer edge of Parts #5 & #6. Each ring is 3/16" thick by 5/8" wide. This mica is used to prevent magnetic leakage to Part #2.
22) Winding for driver casting has 59 coils, each coil fills two slots (total of 118 slots). Each coil has 140 turns of #26 cotton coated copper wire. There are 12 coils at 1-3 span, 47 coils at 1 to 4 span.
23) Winding for generator casting has 104 coils (104 slots). Each coil is made of 280 turns of #28 cotton coated copper wire. Coils span 1 to 5 having 52 groups of two coils per group.
24) Insulation mica tube located at the inside diameter of the generator housing measuring 3/32" thick by 4" high. Also, a mica plate 3/32"thick is under this generator housing.
25) Copper tube to support driver casting measuring 24-1/2" OD, 24-1/4" ID by 12" high.
26) Center aluminum hub is 81% aluminum and 19% magnesium to support 3 major parts: the generator housing, the motor housing and the eight magnet coil assembly. There are 8 coil shapes cut into this part for a clearance which allows l/8" mica between the coil and the hub.
27) Eight magnet coils equally spaced around, located inside machined holes in center Hub #26 forming an inside diameter of 10-1/4". Each coil is wound onto a coil form (see size on print) which hold 3 winding layers to add up to 280 turns of #16 cotton coated copper wire. These coil forms are 8 steel frames, .030" thick. Each frame is 6-1/4" high, hollow core and makes firm metal to metal contact to the mounting base. These coils are hollow and do not have a top cover plate. The 280 turns of wire are held in place by a top lip of steel, .030" thick. When these coils are inserted into the generator housing cavities, they are a close fit with the cotton coating of the wires directly against the generator casting. This prevents coils from shaking and allows the coils to send their pulsed magnetic energy waves into the generator casting which then aids an setting up the needed pulse rate for the unit. As these coils rotate, their hollow centers create a certain vacuum effect likened to a vortex. Whenever a vortex is present, magnetic energy is free to flow. All this magnetic action is aided by the materials which comprise the assembly of the coils. For example, coil size, metal thickness, wire size, turns, connections, etc - all take part in helping to create the needed Coil Collapse timing. The magnetic energy when removed from the center commutator impacts the coils at 26 pulses per complete revolution then 26 X 4800 = 124,800 pulses per minute activating these 8 coils. These 6-1/4"high coils send part of the rising and falling magnetic energy field into the generator housing which is in contact with the coils. As the Generator becomes impacted by this PULSED magnetic energy flow it then affects the release timing of the magnets. This timing affects the revolutions and the revolutions affect the pulsing, and the pulsing determines the outlay of the magnetic current from the Generator to the Driver winding which then helps to establish HP. When the unit is driven by the 9 HP starter Motor, the magnet coils send their energy storage charge first into the aluminum laminated Plate #28 through the actual contact of the Steel Frame #27. This laminated Plate then transfers an energy charge through the brass connecting arms Part #34 and into the

magnesium plate #30. This magnesium plate remains charged after the unit rotates faster and disconnects the arms. This charged plate becomes a massive holding attract the moment the control brushes circuit generates energy into the 8 magnet coils. This massive attract results from half of the laminated Aluminum Plate being charged with one set polarity and the other half an opposite polarity. This action can be likened to one giant magnet and the connection pattern for the 8 magnet coils cause this action to happen.

28) Mounting base for the 8 magnet coils is a ring shaped assembly measuring 11-3/8" ID by 18-3/8" OD by 3/4" thick (5+sheets of .002 thick sheet metal shim stock). This ring is made of six pieces of aluminum (Alminal W16) each being 1/8" thick by 18-3/8" OD, 11-1/8" ID. Between each of these rings is placed one piece of .002 steel shim stock measuring 18-3/8" OD by 11-1/8" ID. The assembly is bonded together with nonmetal epoxy glue and held with nylon screws to form the 3/4" (+) thickness. All 8 coils have their bottom steel surface making direct contact to the top aluminum ring with nylon bolts going into threaded holes is shown on print.
29) Delrin ring with a 8" ID, 19-3/8" OD by 1" thick secured to part #26. Part #28 is secured to this ring.
30) Magnesium ring measuring 11-1/2" ID by 18-1/8" OD by 1/2" thick. This part is mounted so as to be located as close as possible to the bottom of part #28 without making actual contact.
31) Mica ring located under part #21. This ring measures 11-1/4" ID by 18-3/8" OD by 1/8" thick.
32) Hardened aluminum driver plate which is secured to the center shaft with a left-hand thread. This plate measures 18-3/4" OD with 1-1/2" ID (threaded to the shaft) shaped as shown on print. Parts #30 and #31 are secured to this plate with non-metal screws.
33) Six machined grooves cut into the 3/4" thick aluminum assembly.
34) Six brass curved connecting arms that swivel on shafts which are mounted to the magnesium ring. These brass arms are lightly held into the aluminum assembly and accomplish two purposes. First, they allow the inner rotor to be spun by turning the center shaft. Second, they carry a magnetic charge from the 8 coils through the aluminum and into the magnesium ring to transfer the needed HOLDING charge. As these arms are caused to rotate faster than the start-up speed, they move out and away causing the charge to the magnesium to serve as a holding clutch which then allows the rotor to drive the outputshaft.
35) Six safety stop rods, screwed into the magnesium to prevent the brass connecting arms from moving too far out of position.
36) Six brass shafts secured into part #30 which allow parts #34 to move as needed.
37) Center brass shaft 21" long, made as shown with the center portion being 1-3/4" in Dia. The lower section has a left hand thread which allows part #32 to be firmly secured to the shaft.
38) A brass plate 4" OD, 3/8" thick which is a pressfit onto the center shaft. This plate adds support to firmly hold part #32.
39) A brass spacer washer to prevent the rotor from shifting downward with the center ball bearings.
40) Are two double-wide ball bearings measuring 1-1/2" ID by 2-3/4" OD. These bearings allow the center hub part #26, to rotate free of the center shaft.
41) One ball bearings held by the cover plate, measuring 1-1/2" ID by 2-3/4" OD.

42) A bearing housing to support parts #41 and is bolted to the cover plate.

43) Top cover plate measures 29-1/4" OD, 5/8" thick. Made of cast semi-red brass. Description: Al 0.005 max Cu 75.0-77.0 Fe 0.40 max, Ni 1.0 P 0.02 max Pb 5.5-7.0 S 0.08 max Sb 0.25 max Si 0.005 max Sn 2.0-3.0 Zn 13.0-17.0 Other Cu may include Ni; for continuous castings, P 1.5 max. The Cover becomes a conductor of the particle activity that is generated on the rotary magnets and serves as an incoming and outgoing point of magnetic transference.

44) A bottom double-wide ball bearing measuring 1-1/2" ID, 2-3/4 " OD mounted into the bottom ball bearing mounting housing.

45) Bottom ball bearing housing, made of aluminum measuring 4-3/4" OD, by 2-3/4" high, bolted to part #1.

46) Two hand activated brass shafts which are caused to be pushed upward, to then compress brake material up against the bottom of casting part #26 to stop the rotor for maintenance purposes.

47) Commutator made in 3 layers 7-1/4" OD, 4" total width. There are three sections of 52 bars per section, each bar has a .030 mica between bars. A total of 120 connecting brass pins, 1/16" thick are secured to these bars. The brass pins are comprised of 72% copper, 9-1/3% nickel, 9-1/3% manganese and 9-1/3% magnesium. The holding core of this commutator assembly is brass with a 3-3/8" ID. NOTE: The center commutator has only 16 of these brass pins secured at the proper bars. (See print for details)

48) One brush holder to hold a grouping of 9 brushes, 3 for the generator, 3 for the magnet coil commutator, and 3 for the driver. This brush holder is aluminum with nine non-metal insulation jackets between the brushes and the aluminum.

49) Nine soft carbon brushes with very light spring tension to hold the brushes to the commutator bars.

50) One brush holder to hold only two brushes, one for the Generator and one for the magnet coil commutator.

51) The connection pattern which circuits the brushes as needed.

52) Jumper wires located at the commutator.

53) Drilled holes to allow the wires from the winding to be circuited to the commutator.

54) One shaft seal to hold a vacuum interior measuring 1-1/2" OD by 2-3/4" OD by 1/2" thick.

55) Two "O" rings, one in part #1 and one in part #43.

56) Are 6 holes, 5/8" dia. Drilled and tapped into the bottom plate to use to hold motor as needed.

57) A vacuum pipe with valve to pull a vacuum to the unit or add oxygen as needed.

58) A 2" dia. View port sealed with see-through acrylic to observe the brushes during operation.

59) An insulation ring, 6-3/8" OD, 1/4" thick by 1-3/8" high. The inner surface of part #2 is knurled because as particles strike this inner knurled surface they are caused to be defused by the angles of this surface contributing to the needed bombastic particle action within the unit. This knurled aluminum housing holds and utilizes the needed molecules that would otherwise simply penetrate the wall. This captured energy gets to be circuited to the 168 rods which are 7/32" thick, creating a needed thermos bottle effect at this major energy zone. The 168 rods which are 13-5/8" long and the 84 rods which are 7-3/16" long serve the purpose of creating a needed POLE DIVERSITY charge system between the charged Generator Housing and the charged Motor Housing. These rods become charged with neutral magnetic fields and cause the motors magnetic fields to respond to these

rods creating a vibration stabilization. Thus magnetic energy becomes stored in the carbon plates which almost contact the upper and lower castings to then supply the needed return field for the generator winding. These rods also create a condition that expands the draw factor for the driver magnets, an action that keeps the magnets properly charged.

60) A delrin ring having a 24-1/4" OD, 21-1/2" ID by 2-7/8" high. This part is held as a support spacer between copper tube #25 and part #19.

61) 118 brass wedges, 3-1/2" long by 7/16" wide, by 1/32" thick (same alloy blend as the driver housing.)

62) Brass wedges for 104 generator slots are 3-1/4" long, 7/16" wide, 1/32" thick, same alloy blend as the driver wedges.

63) NOTE - the top row of generator magnets protrudes 3/16" up past the slot area of the generator winding.

FULL SIZE TOP AND SIDE VIEW OF COMMUTATOR ASSEMBLY

Parts list for Commutator Construction

1. Commutator Core - made of non-metal material to withstand heating without expanding. Measures 7-1/4" O.D., 3-3/4" I.D., 4-5/8 " high, machined as shown.
2. Top Cover - made of same material measuring 7-1/4" O.D., 3-3/4" I.D. by 7/16" thick.
3. Eight non metal screws, 10/32 by 1" long, to fasten cover to part #1.
4. Three rings of copper bars shaped as commutators, with 52 bars to each ring, with .030" Mica between all bars.
5. Four Mica rings measuring 3/32" thick with a 5" I.D. and a 7-1/4" O.D.
6. Four hard insulation boards, ring shaped, measuring 5" I.D. by 7-1/4" O.D. 7. Are 1/8" diameter non-metal pins pressed into Parts #6. These pins are located to be set into all copper bars at the top and bottom locations to a depth of 1/8". These pins prevent the bars from sliding outward when spinning.
8. Identifies the lower commutator with its 52 brass wires pressed into these bars and exiting out of the bottom of part #1. Wires are 1-1/8" long.
9. Identifies a total of 68 holes drilled through these lower bars. Each hole is 3/16" diameter.
10. Are sixteen wires, 3" long, exiting out the bottom of part #1.
11. Are 16 insulation tubes measuring 1" long by 3/16" O.D. Tubes have an I.D. to fit wires #10.
12. Are 52 holes in the center commutator, each is 3/16" diameter.
13. Are 52 insulation tubes, 2-3/8" long, 3/16" O.D. with a bore size to fit connecting wires.
14. The top commutator wires. Each bar has a 1/16" dia. wire secured to it. The wire is 4" long. These wires go through tubes #13 and exit from the bottom of Part #1. When the wires pass through part #1, the holes are only large enough to allow the wires to slide through without being loosely fit.

Since the generator housing encases these coils, there is an alternating magnetic pulse rate being registered throughout this housing. This pulse rate condition becomes the driving force which creates a magnetic flow PRESSURE. As the 44 rotating contacts take their travel path with the
generator housing, the pulsed energy is ready to seek out ATTRACT locations.

The 252 rods which are in contact with the carbon ring Part #5, have become magnetically charged, a condition which forms an ideal attract structure. As these rotating contacts pulse to

44 carbon rounded shapes, this energy jumps the gap because of having the needing alternating magnetic pulse rate. This pulsed energy has an unbroken flow pattern, (no off time), as 44 rotating contacts pulse to 42 stationary carbon electrodes. Every time pulsing takes place, it happens at two pulse points, 180 degrees apart. Each moving contact pulses 42 pulses per revolution with two of these contacts always pulsing at the same time. This equates to 147,840 total pulses per second.

This pulsed energy sends its magnetic flow along the rods to complete a circuit to the bottom carbon rings, Part #6. These lower 42 carbon shapes then pulse to 44 moving contacts which rotate with the driver housing Part #16. All of the magnetic energy flow between these contacts gets completed by jumping a space gap. All the magnets, Parts #8 and #13, attract to the windings by jumping across given space distances. Magnetic POWER can only be put to work (within a unit of this design) as it is caused to cross over to a given ATTRACT structure.

Each magnet has its own magnetic pulse rate which is in tune to its draw factor to the atmosphere: however, as the 252 rods are positioned next to the neutral edges of these magnets, these magnets acquire a new magnetic pulse rate. This new pulse flow arrives at the magnets from the generator housing (along with the 252 rods) causing a CHANGE to each magnets draw factor. This change is manifest as an interruption of the magnets' attract pull condition, a desired action which aids in the COIL RELEASE activity.

All of the magnets then become INTUNED to one massive pulse rate which then serves as one draw factor for ALL the magnets. This pulse rate is manifest at the cover plate, Part #43, which is a point of outgoing magnetic transference. The incoming transference is partly caused by the magnetic vibration of the 252 rods. As these rods attract and release the windings, they MOVE (a minuscule amount) to cause a magnetic frequency of sound waves, which then TAPS INTO the energy of the Ionosphere.
The generator winding constantly draws energy from the generator casting as it circuits its flow down to the driver winding. This energy needs to FLOW BACK to the generator casting; the outer magnetic circuit (which utilizes the rods) helps to feed back the magnetic flow to then be recycled. The unit constantly recycles a stabilized magnetic energy (not electro magnetic), because magnetism is a constant.

6.0.0.8. Romag Generator

- Produces magnetic current equivalent of 50 H.P. output
- Suggested use is for running magnetic devices including the Magnetic Water
- Pump and the Pyramid Molecular Vibratory Exchanger Unit
- Requires startup spinning to achieve 1850 RPM
- Requires special sintered magnets

The Earth is surrounded with a sea of energy that is pulsing and is constantly being supplied by a Universal energy system. This energy field that we call the Ionosphere supplies all of the energy needs on our planet. Like the other units we have presented, this Romag-Generator taps into this energy field, converts the energy into something that we can use, and then releases the energy back into the system. This unit, like the others, recycles the Earth's magnetic energy, in fact, all these units cannot function if the energy is not getting recycled because the buildup of energy causes them to stop working.

When we present machinery that connects to the Universal energy mechanism, we are opening a whole new world. These concepts are nothing new, but we have yet to see them implemented in our societies. This technology is so far beyond electricity is its versatility and applications, there is absolutely no comparison. Magnetic energy can manifest as force fields, as fields with various characteristics like weightlessness; it can be transmitted through air and space, it can replicate other energy or matter, it can change the characteristics of energy and matter, it can be blended with various elements to produce various results like heat and cold, it can convert matter like garbage into a more pure energy, and the list goes on and on.

Magnetic energy is not confined to the simple force people observe between two magnets. Magnetic energy is more accurately described as an infinite variety of energy manifestations that are multidimensional in nature. This unit would have absolutely no connection to the Ionosphere if magnets were as simple as most people think. When magnets are spun at the proper speed and their fields are harnessed with the proper elements, they produce a frequency very similar to the ionosphere, and something magical happens. Because of the Universal phenomenon of attractattract (where similar energies are attracted to each other), energy structures in the ionosphere begin to gather and swirl into a vortex as the unit attracts them. The small signal generated by the unit travels at a speed beyond space and time, and energy structures similar to it are attracted to it at the same velocity. This attract-attract phenomenon allows magnets to assist in a tremendous amount of energy generation. This motor is a magnetic device incorporating the use of permanent magnets turning in a rotor to generate a magnetic/electro energy which is then circuited to other mechanisms to do useful work.

PRINCIPLE BEHIND THIS ENERGY SOURCE

This motor attracts neutral magnetic energy into the rotor magnets, sets up a response between various components which then complete a circuit that becomes the driving force to turn the structure.

SUMMARY OF THE DEVICE

An important objective of the present invention is to provide a revolutionary new concept concerning the utilization of power by directly capitalizing on the natural resource phenomenon of magnetism. Electrical power is the result of expending energy to drive a copper wire through a magnetic field. But magnetic energy is a natural resource needing a specific mechanism to draw on. There is no incorporation of a secondary energy source, except at start-up, to cause this magnetic/electro unit to continuously function.

HOW THE UNIT FUNCTIONS

The Ro—Mag magnet motor/generator must be charged up by driving the main shaft at 1350 R.P.M. for 67 seconds. This charging process manifests as magnetic energy within the 10 coils of copper wire, the copper tube supporting these coils and the copper coated steel wires wrapped around the magnets. This charging is accomplished while the ten coil connection wires are making contact and setting up their alternating magnetic poles.

After the 67 second charging time one of these coil connection wires must be opened and this circuit again completed through an energy draw process. As current is drawn from the ten coils this ‘draw’ sets up magnetic poles which are a response between the rotor magnets and the coils.

This response then causes the main shaft to be rotated by the permanent magnets as they attract and build a release field. Then the driver unit is disconnected allowing the unit to rotate with the load being the activating driving force.

Do not use ‘electrical teaching’ to presuppose how much of an energy flow is allowed to leave the coils by focusing on the wire size of these 10 coils. The magnetic current flow being circuited out through the copper wire has no dependency on this wire’s inner structure, in that the wire is only a point of transference where an exchange takes place, while producing ‘no heating’ of the wires/coils.

The fields of the magnets must be maintained during their spin movement. These magnetic fields which are encapsulated are achieved by the wiring system. The attract/release of the magnets is a function caused by several factors. First, the magnets attract field between north and south is completed by taking a crossing path of attract (top of one row to bottom of next, etc.). This action has the effect of fields blending into fields, and a hold-back attract does not happen. Each time a magnet set passes a coil an interchange of like energy between the coils around the magnets and the generating coils sets-up neutral polarities which are ‘release fields' and prevents a hold-back attract. One important magnetic assembly is the circuitry that allows this interchange of energy. This is a recycling of a stabilized magnetic/electro energy not electro/magnetic because the field of force is not a case of electrical input, an input that created the magnetic, but rather a build-up of magnetic energy which caused an energy thrust.

In further defining the workings of this unit it is important to understand that although electrical and magnetic (energy) work with similar attitudes, the manner in which they work sets-up a differing energy effect. One of these effects is that magnetic structures want to share their flow, compatible to the Universal Force, while electrical flow argues, (short circuits, sparks, etc.). Because of this fact the working responses (within the unit) take place, ‘how they are needed’, and ‘when they are needed’ which results in a functioning unit. There is a continuous transmutation process taking
place whereby magnetic energy continually generates an energy that manifests a measurable current. This ‘removed current’ is best described as low voltage at very high amperage and if this energy is used to its maximum potential then it will out produce the power produced by a standard 50 H.P.
electrical generator.

With a constructed unit that functions continuously, there comes an awesome awareness that by allowing the now set laws of physics to be changed error is corrected. We can then discover that magnetism has a true value and is not an obscure by-product. From this mental freedom will come discoveries heretofore unknown concerning magnetic fields.

The following are claims to summarize important points about the unit:

A magnetic powered device that utilizes a natural, neutral and universal magnetic energy and makes the energy available for use to a different device that is designed to attract the energy from this unit. For example, this Romag-Generator can power the Magnetic Water Pump or the Pyramid
Molecular Vibratory Exchanger Unit.

a) A device whereby a rotating portion is supported in an appropriate housing
b) Rotating portion being a rotor which has secured to it an array of magnets uniformly spaced and that when properly charged cause motor rotation
c) Said rotor having secured to it coils of wire, properly arranged to encapsulate the fields of the rotating magnets, which then produce an ongoing magnetic energy
d) Said rotor and parts being constructed from known metals that are necessary for the conductive activity used in a magnetic circuit
e) Rotor in said unit having a particular spacing of magnets that produces the necessary requirements to achieve the end result which when in action has a stop gauge effect on the productive magnetic system
f) Part in said device being a stationary metal tube that creates a stabilizing boundary for the magnetic field of the unit
g) Unit has a magnetically pressurized tube that serves as a magnetic reservoir whereby magnetic energy is circuited, as needed, to coils for energy removal, i.e., power lighting fixtures, pumps, etc.
h) Copper coils wrapped around said metal tube in such a manner as to respond to rotating magnets causing continuous rotation. The device utilizes an attracting system that freely
converts magnetism, (from permanent magnets) into magnetic/electro energy, utilizes and returns it to its original state.
i) The device has attracting system comprising a wiring arrangement whereby the attracting force is caused to release at the needed release moment to allow continuous rotation.
j) The device uses a rotational movement that includes a control means for accurately maintaining the number of revolutions per minute.
k) The device has a means for activating the unit into motion.

In the past, inventors have sent devices and drawings to Patent Offices claiming they had invented perpetual motion. We state that this motor, which is driven totally by permanent magnet power, in no way can be compared with perpetual motion in that the principle is not the same. When perpetual motion is discussed, it is mentioned in terms of unknown factors which produce an unknown force.

Here, in this Ro-Mag Generator, the force of attract-attract to attract-release within the magnetic structure can be observed, thereby producing the generating force to turn the rotor which in turn produces the outflow of power. This power source is not predicated on a continuous flow of energy but predicated on the consistency of the transmutation process of the magnetic molecular structures within the Earth’s pressure flow.

Parts list for Romag-Generator

1) ALUMINUM BASE PLATE, 21" DIA., ½" THICK WITH 1-3/8" BORE. THE PURPOSE FOR THIS EXTENDED BASE DESIGN IS TO BALANCE OUT THE STRUCTURE WHICH THEN EQUALIZES THE MAGNETIC FLOW.
2) ALUMINUM TUBE SECURED TO PART #1 MEASURING 2½" O.D.,1 3/8" I.D. BY 1" THICK

3) BOTTOM BRONZE BUSHING, 1-3/4" LONG, 1-3/8" O.D. BY 1" I.D.
4) A TEFLON THRUST WASHER, 1" I.D., 2½" O.D. BY ¼" THICK
5) A 1-3/4" LONG BY 7/8" I.D., BY 1" O.D. TEFLON SLEAVE BEARING, GLASS FILLED (BOSTON GEAR) PRESSED ONTO CENTER SHAFT.
6) CENTER BRASS SHAFT, 14" LONG, 1" DIA., MACHINED AT ENDS TO 7/8" DIA.
7) TOP COVER PLATE, 17-5/8" O.D., 1/2" THICK WITH A CENTER BORE OF 1-3/8" MADE OF CAST SEMI— RED BRASS. DESCRIPTION: Al 0.005 max Cu 75.0-77.0 Fe 0.40 max Ni 1.0 P 0.02 max Pb 5.5-7.0 S 0.08 max Sb 0.25 max Si 0.005 max Sn 2.0-3.0 Zn 13.0-17.0 Other Cu may include Ni; for continuous castings, P 1.5 max. THE COVER BECOMES A CONDUCTOR OF THE PARTICLE ACTIVITY THAT IS GENERATED ON THE ROTARY MAGNETS AND SERVES AS AN INCOMING AND OUTGOING POINT OF MAGNETIC TRANSFERENCE.
8) ALUMINUM TUBE SECURED TO BOTTOM SURFACE OF PART #7, MEASURING 2½" O.D., 1-3/8" I.D. by 1" THICK
9) TOP BRONZE BUSHING, 1-3/4" LONG, 1-3/8" O.D. BY 1" I.D.
10) A 1-3/4" LONG BY 7/8" I.D. BY 1" O.D. TEFLON SLEAVE BEARING, GLASS FILLED, PRESSED ONTO TOP OF CENTER SHAFT.
11) ONE TOP ¼" KEY SLOT AND KEY TO SECURE ALUMINUM ROTOR PLATE TO SHAFT #6.
12) TOP ALUMINUM ROTOR PLATE, 13" DIA. WITH 1" BORE, 1" THICK
13) ONE BOTTOM ¼" KEY SLOT AND KEY TO SECURE ALUMINUM ROTOR PLATE TO SHAFT #6
14) BOTTOM ALUMINUM ROTOR PLATE, 13" DIA. WITH 1" BORE, 1" THICK.
15) TUBE HELD TO CENTER SHAFT BY PARTS #12 AND #14 MADE OF 83% COPPER, 3% ZINC, 7% TIN, AND 7% LEAD. TUBE MEASURES 8" HIGH, 14-5/8" O.D., 7/8" WALL THICKNESS
16) THIN PLASTIC TAPE PLACED BETWEEN PARTS #12 AND #14 AS THEY ARE PRESSED INTO TUBE #15
17) ARE TEN TOP GROOVES CUT INTO TUBE #15 EQUALLY SPACED, MEASURING 4" HIGH, 2-1/32" WIDE BY .300" DEEP.
18) ARE TEN BOTTOM GROOVES CUT INTO TUBE #15 EQUALLY SPACED AND ADVANCED FROM TOP GROOVES BY HALF OF GROOVE SIZE, ALSO MEASURING 4" HIGH, 2-1/32" WIDE BY .300 DEEP.
19) A .300" WIDE SLOT CUT IN CENTER OF PART #15 FOR 360 DEGREES, TO A DEPTH OF 5/16"
20) TWO LAYERS OF MASKING TAPE PLACED INTO GROOVES #17 AND #18.
21) ARE 20 SETS OF 78 BENT COPPER WIRES PER SET, WIRES ARE COTTON COATED #19 WIRE (.036" THICK - COPPER, NO VARNISH). THESE WIRES ARE HELD IN PLACE BY PART #20 WITH THE COTTON INSULATION NOT REMOVED.
22) ARE 20 MAGNETS MADE OF ALNICO 5 SINTERED MATERIAL, (COOLED IN A MAGNETIC FIELD) M-1076; 8 AL, 14 Ni, 24 Co, 3 Cu, bal Fe. PEAK ENERGY PRODUCT OF 3.5. EACH MEASURING 3-7/8" HIGH, 1-7/8" WIDE BY 3/8" THICK, SECURED INTO GROOVES #17 AND #18 WITH BACK FACE OF MAGNETS DIRECTLY AGAINST COTTON COATING OF BENT WIRES #21
23) ARE 20 SETS OF ‘WIRE WRAPS’ PLACED AROUND THE 3/8" WIDE PERIMETER OF ALL 20 MAGNETS; THERE ARE 9 TURNS PER WRAP OF .032" THICK CLEAN COPPER COATED STEEL WIRE, MAKING FIRM CONTACT DIRECTLY TO MAGNETS

24) THE OUTSIDE SURFACES OF PARTS #23 MAKE FIRM CONTACT TO PARTS #21, THUS COTTON INSULATION IS REMOVED FROM BENT WIRES ONLY AT THIS POINT OF CONTACT.

25) THE TEN TOP SET OF WIRES #23 ARE CONNECTED WITH EXTENDED WIRES THAT GO FROM THE NORTH HALF OF THE 3/8" WIDE SURFACE TO THE SOUTH HALF OF THE WIRE SET WHICH IS NEXT TO IT, THUS FORMING A CLOSED LOOP CONNECTION TO THESE TEN SETS OF WIRES.

26) THE TEN BOTTOM SET OF WIRES #23 ARE ALSO CONNECTED WITH EXTENDED WIRES THAT GO FROM THE NORTH HALF OF THE 3/8" WIDE SURFACE TO THE SOUTH HALF OF THE WIRE SET WHICH IS NEXT TO IT THUS FORMING A CLOSED LOOP CONNECTION (NO CONTACT FROM TOP TO BOTTOM).

27) ARE 20 COPPER CONNECTING SLEAVES MEASURING 1/8" O.D. BY .032" I.D. BY 3/8" LONG TO JOIN WIRES #25 AND #26 BY ALLOWING THE STEEL CORE TO CONTACT STEEL TO STEEL AND THE COPPER EXTERIOR COATING TO BE CONNECTED COPPER TO COPPER,THUS MAINTAINING TWO INDEPENDENT FLOW CIRCUITS.

28) ARE TEN PIECES OF MYLAR INSULATION MEASURING 2-1/32" BY 5/16" BY .010" THICK, PLACED BETWEEN THE WRAPPED WIRES FROM THE UPPER MAGNETS TO THE LOWER MAGNETS, THUS THESE MAGNETS ARE LOCATED TO PRESS AGAINST THIS INSULATION WHICH IS LOCATED AT THE CENTER OF PART #19.

29) COPPER TUBE TO HOLD 10 COILS, TUBE MEASURES 15½" I.D., MADE OF THREE PIECES OF 1/16" THICK COPPER RINGS, 8" HIGH.

30) TWO PIECES OF .002" THICK PAPER STRIPS, 8-1/8" WIDE, PLACED BETWEEN PARTS #29.

31) ONE PIECE OF .100" THICK MICA, 1/8" WIDE BY 8" LONG, PLACED AT THE SEAM OF COPPER TUBE TO MAINTAIN A SPLIT COPPER RING SPACING OF 100". THE NEEDED MAGNETIC ACTION IN THESE COPPER RINGS INTERACTS IN DIFFERENT DIRECTIONS IN A SIMULTANEOUS MANNER AS A RESULT OF THE FACT THAT A MAGNETIC FLOW (AS OPPOSED TO ELECTRICAL) IS DOU LED IN SPEED CAUSED BY THE MICA SEPARATION OF THESE COPPER RINGS.

32) TEN 'LOCATOR GROOVES’ CUT INTO THE TOP AND BOTTOM OF TUBE #29, EQUALLY SPACED FOR 360 DEGREES. EACH GROOVE COVERS A DISTANCE OF 3- 1/8"FOR COIL PLACEMENT.

33) ARE 10 BOTTOM COILS OF NUMBER 16 COTTON COATED COPPER WIRE, (NO VARNISH) PLACED AROUND GROOVES #32 WITH 45 TURNS, SPACED CLOSELY - WIRE TO WIRE.

34) ARE 10 TOP COILS OF NUMBER 16 COTTON COATED COPPER WIRE (NO VARNISH) PLACED CENTERED ABOVE THE 45 TURNS AND NESTED INTO THE GROOVES OF THE BOTTOM COIL WITH 23 TURNS WHICH SPAN 1½". AS THE BOTTOM COIL IS HAND WOUND, THE TOP COIL THEN GETS WOUND IN A ‘REVERSE DIRECTION’ THUS CAUSING A U SHAPED CONNECTION (NOT BROKEN) BETWEEN THE BOTTOM LAYER AND TOP LAYER FOR A TOTAL OF 95 FEET OF WIRE PER COIL.

35) CONNECTION PATTERN FOR THE TEN COILS IS A 1 TO 3 JUMPER CONNECTION PLACED FOR ALTERNATING COIL POLARITIES. (SEE SKETCH.)

36) ONE OF THE CONNECTIONS PART #35 IS OPENED AFTER A CHARGING SEQUENCE OF 67 SECONDS AT 1850 R.P.M. AND THEN GENERATED ENERGY IS CONTINUOUSLY EXTRACTED WITH THE LOAD BECOMING THE ACTIVATING DRIVING FORCE THUS SERVING AS A REPLACEMENT FOR THE JUMPER CONNECTION.

37) VERTICAL ALUMINUM ‘TUBE MEASURING 16-1/8" I.D., 7/8" THICK WALL AND10½" HIGH. COILS #34 ARE UP AGAINST THIS TUBE’S INNER SURFACE WITH ONLY MASKING TAPE BETWEEN, THUS THE COILS ARE THE ONLY SUPPORT FOR PART #29. THIS ALUMINUM TUBE SERVES TO COMPLETE THE NECESSARY MAGNETIC CIRCUIT BY ITS THICKNESS WHICH SERVES TO SUPPLY THE NEEDED THERMOSBOTTLE EFFECT, PREVENTING THE ESCAPE OF USEFUL MAGNETIC ENERGY AND ALSO AFFORDING EXIT POINTS FOR UNWANTED STRUCTURES WHICH THEN RETURN TO THE EARTH’S BALANCE SYSTEM.
38) A MINIMUM CLEARANCE OF 1/8" UP TO 3/16" BETWEEN THE INNER SURFACE OF TOP COIL #34 AND MAGNETS #22. A MAGNETIC PARTICLE WIND BUILDS WITHIN THIS SPACING THUS SUPPLYING THE NEEDED CIRCULATION FOR MAXIMUM MAGNETIC ENERGY WITHDRAWAL
39) ARE 20 BRONZE METAL STRIPS MEASURING 4" LONG BY 1/8" WIDE BY 1/16" THICK, MADE OF 83% COPPER, 8½% TIN, 5½% LEAD AND 3% ZINC. EACH OF THESE METAL STRIPS GETS BONDED WITH CLEAR EPOXY GLUE TO THE TOP SURFACES OF THE BENT WIRES, PART #21 AND EXTENDS INWARD TO CONTACT THE WRAPPED WIRE PART #23, THEN RESTS AGAINST THE SIDE OF THE MAGNET.THIS METAL STRIP BUILDS, HOLDS AND RELEASES THE NEEDED MAGNETIC FIELD WHICH SUPPLIES THE RELEASE ACTION.
40) A COATING OF CLEAR ACRYLIC SECURED TO THE OUTER SURFACE OF THE ROTOR TO HOLD MAGNETS AND PARTS AS NEEDED.
41) THE ROTATIONAL DIRECTION IS COUNTER CLOCKWISE LOOKING AT THE UNIT FROM TOP DOWN.
42) NOTE- THE BENT WIRES PART #21, AT THEIR LEAD EDGE, DO NOT PROTRUDE PAST THE OUTER SURFACE OF PART #15. THEIR TRAIL EDGE IS 1/16" BELOW THESURFACE OF THE MAGNET WHICH ALLOWS STRIP #39 TO BE LOCATED TO NOT EXTEND OUTWARD PAST THE MAGNET WHEN PLACED ABOVE THESE BENT WIRES.

6.0.0.9. Mini Romag Generator

- Produces 3-1/2 volts, 7 amps
- Requires startup of 2100 RPM for 42 seconds
- Suggested use: Battery Charging, lighting, powering smaller devices All materials are readily available
- Required load for continuous operation

This motor is a magnetic device incorporating the use of permanent magnets turning with a rotor to generate a magnetic/electro energy which is then circuited to other mechanisms to do useful work. This unit demonstrates that magnetic principles can be utilized in units of various sizes. Magnetic units can be microscopic or a mile wide, as long as the correct principles are maintained. When magnetic fields are properly harnessed, when the magnets and housing are a certain composition, when the magnets are rotating at the proper rpm, and when the energy is given a redistribution path, a very powerful phenomenon occurs; the natural flow of Universal magnetic energy begins to escalate. All magnets draw energy in to maintain their power, but under the right conditions magnets can assist in attracting large quantities of magnetic energy that can be used for numerous purposes.

PRINCIPLE BEHIND THIS ENERGY SOURCE

This motor utilizes neutral magnetic energy from the Earth's energy field by attracting theenergy through the proper magnetic harmonic. The unit captures the energy and changes it into a polarity that magnetic devices can accept. This simple unit is like a water wheel, it only functions if a flow is moving through it, and it will continue turning as long as it is being used to power something.

An important object of the present device is to provide a revolutionary new concept concerning the utilization of power by directly capitalizing on the natural resource of magnetism. Electrical power is the result of expending energy to drive a copper wire through a magnetic field. But magnetic energy is a natural resource needing a specific mechanism to draw on. There is no incorporation of a secondary energy source except at start—up, to cause this magnetic/electro unit to continuously function.

HOW THE UNIT FUNCTIONS:

The here disclosed 3½ volt, 7 amperage magnet motor/generator must be charged up by driving the main shaft at 2100 RPM for 42 seconds. This charging process manifests as magnetic energy within the six coils of copper wire, the copper tube supporting these coils and the copper coated steel wires wrapped around the magnets. This charging is accomplished while the six coil connection wires, Part #22, are making contact and setting up their alternating magnetic poles. After the 42 second charging time one of these coil connection wires must be opened and this circuit again completed through an energy draw at what could be called 7 amps. See load Part #23. As current is drawn from the six coils, this draw sets up magnetic poles which are a response between the rotor magnets and the coils. This response then causes the main shaft to be rotated by the 12 permanent magnets as they attract and build a release field. Then the driver unit (hand crank) is disconnected allowing the unit to rotate with the load being the activating driving force.

The fields of the magnets must be maintained during their spin movement. These magnetic fields which are encapsulated are achieved by the wiring system. The attract/release of the magnets is a function of several factors. First, the magnets attract field between north and south is completed by taking a crossing path of attract (top of one row to bottom of next, etc.). This action has the effect of fields blending into fields, and a hold—back attract does not happen. Each time a magnet set passes a coil an interchange of like energy between the coils around the magnets and the generating coils sets—up neutral polarities which are ‘release fields’ and prevents a hold—back attract.

One important magnetic assembly is the circuitry which allows this interchange of energy. This is a recycling of a stabilized magnetic/electro energy not electro/magnetic because the field of force is not a case of electrical input, an input that created the magnetic energy, but rather a build— up of magnetic energy which caused an energy thrust.

In further defining the workings of this unit it is important to understand that although electrical and magnetic (energy) work with similar attitudes, the manner in which they work sets—up a differing energy effect. One of these effects is that magnetic structures want to share their f1ow, compatible to the Universal Force, while electrical flow argues, (short circuits, sparks, etc.). Because of this fact the working responses (within the unit) take place, how they are needed, and when they are needed which results in a functioning unit. There is a continuous transmutation process taking place whereby magnetic energy continually generates an energy that manifests a measurable current.

In the past, inventors have sent devices and drawings to Patent Offices claiming they had invented perpetual motion. This motor, which is driven totally by permanent magnet power, in no way can be compared with perpetual notion in that the principle is not the same. When perpetual motion is discussed, it is mentioned in terms of unknown factors which produce an unknown force. Here, in this Mini Ro—Mag, the force of attract—attract to attract—release within the magnetic structure can be observed, thereby producing the generating force to turn the rotor which in turn produces the outflow of power. This power source is not predicated on a continuous flow of energy but predicated on the consistency of the transmutation process of the magnetic molecular structures within the Earth's pressure flow.

Some additional points may be useful in understanding the functioning of this unit. The thin web of brass between the magnets is important because it acts somewhat like a magnetic insulator. Each section of brass, on the sides of the magnets becomes charged, somewhat like a capacitor. This builds into a force which TAKES PART in causing the rotations.

The magnets have a particularly low charge, but their charge is only a catalyst at the onset. It is during the SPIN charging that this blend of alnico elements draws neutral magnetism from the atmosphere that then manifests with the proper magnet strength for continuous running. This 2.2 peak energy product is the power needed that becomes a point of INCOMING and OUTGOING magnetic transference. Too much charge would solidify polarities that would then negate the needed VARIETIES of DIFFERENT magnetic fields.

This mini-Romag unit cannot run horizontally. The magnetism of the earth system FEEDS this unit from the top. Gravity is compressed magnetism. The spinning rotor CAPTURES this compressed magnetism.

Without the copper coated steel wire around the magnets no activity would take place and here is why. As the rotor is spun, an action that MUST happen is that the fields around the magnets need to stay with the magnets. These fields do not manifest as individual flux lines if the magnets are not wrapped as disclosed. The copper-coated steel wire becomes a MAGNETIC CONTAINMENT FIELD as these wires take on THEIR OWN charge. These SETUP fields then serve as ISOLATOR fields which keep the magnets' flux lines in their place.

The reason these copper-coated steel wires need no insulation is because the COPPER COATING ITSELF builds into a magnetic flow, which insulates the primary flow that travels inside the steel portion. This action results in a magnetic flow circuit that is GUIDED by the activity of the copper coating. This action should serve as a TEACHING to show how magnetic current can be sent through conductors that are TOTALLY UNLIKE the standard electrical insulators. The primary USE of this field (set up by these wires) is that it serves as a RELEASE AGENT that breaks the elastic hold-back during the generating cycle.

The reason for the U-bent wires is that they serve as a CONDUIT that causes the magnets flux lines to take their travel path very close to the magnet. This circuit path is around the back surface and both side edges. This action can be likened to compressing a balloon. The result is that the field on the front or WORK SURFACE is greatly extended OUTWARD. This outward extension impacts the copper stator core, which then FEEDS captured magnetic current into the stator windings.

PARTS LIST AND CONSTRUCTION DETAILS

When building your first unit we suggest using the stated materials.

1) Aluminum Base Plate
2) Sleeve Bearing, 1" long, ½" inside diameter, oil impregnated brass.
3) 4" long by ½" diameter Brass Shaft
4) Brass 2" diameter Rotor, 1—3/4" long
5) Six rotor slots, each 1—3/4" long by .260 deep by 23/32" wide. These slots are spaced exactly 60 degrees apart.
6) One slot cut in center of Brass Rotor, 360 degrees around, ¼" wide by 5/16" deep. 7) 12 slots (formed from the six slots as the 360 degree cut is made). Each slot is lined with .010 thick mica insulation.
8) A total of 228 pieces of U—shaped .040 thick copper coated steel wires. Each slot (Part #7) has 19 pieces of these wires fitted into the Mica, thus these wires do not contact the Brass rotor. The lead edge of these wires (See Figure 7) is flush with th Rotor’s outer surface and the trail edge protrudes 1/8" above the Rotor’s outer diameter. 9) Eleven complete turns of .032 thick copper coated steel wire. These 11 turns or ‘wraps’ accumulate to 3/8" wide and the same pattern is placed around all 12 magnets. When placed into the bent wires #8, they are a snug fit making firm contact.
10) Are 12 pieces of .005" thick mylar insulation inserted into the cores of the wires #9.
11) 12 permanent magnets, insulated with the mylar, to not contact wires # 9. These magnets measure 3/4" long, 5/8" wide, 3/8" thick and are made of a special composition and strength. Alnico 4, M—60; 12 AL, 28 Ni, 5 Co, bal Fe, Isotropic permanent magnet material cooled in magnetic field, Cast 9100 TS. 450 Brin, 2.2 Peak energy product. When inserted in the rotor the outer faces of these 12 magnets are not to be machined to a radius. The center of these magnets pass the center of the coils with 3/32" clearance. The edges, where the wires are wrapped, pass 1/32" away from the coils. This ‘changing magnet spacing’ aids in not only the release cycle but also contributes to rotational movement. (Sharp magnet edges which are facing the coils are to be sanded to a small smooth radius.)
12) Magnet polarity placement into Rotor. (See Figure 5.)
13) Connection pattern for wires wrapped around magnets. (See Figure 6.) The 12 wire wraps are divided into two sections, upper and lower of six each. There are no connections between these sections. The magnetic flow direction between the upper 6 wraps and the lower 6 wraps is attained by the ‘flow direction’ as shown in Figure 5. Viewing Figure 6 shows the wires wrapped around the magnet starting at the top ‘north’ half and then after 11 complete turns the wire exits at the lower ‘south’ half. As this wire then goes to the next magnet it arrives at an attract wire which is its ‘north’ side. Thus all wires get interconnected from south to north magnet half or north to south magnet half. The actual connections should be crimped copper clips not solder with insulation tubing to prevent contact to the Rotor body.
14) A .030 thick copper tube (stiff material) 2" long by 2½" inside diameter.

15) Are six slots cut at the top of tube #14. These slots are 5/8" wide by 1/32" deep spaced at 60 degrees apart.

16) Are six slots cut at the bottom of tube #14. These slots are 5/8" wide by 5/16" deep and in line with the upper slots #15.

17) Six copper tube mounting points.

18) Acrylic ring to hold Part #14, measuring 3—3/4" O.D., 2¼" I.D., 3/8" thick bolted directly to

Part #1. This ring has a .030 wide groove cut ¼"deep to allow the six copper tube mounting points,

Part #17, to be inserted.

19) A .002" thick plastic insulation paper to be placed around the inside and outside of Part #14.

20) Are six coils of insulated copper wire, each coil having 72 turns of .014 thick wire. Each coil iswound with two layers, the bottom layer to completely fill the 5/8" wide slot with 45 turns and the top layer to span 5/16" wide with 27 turns. To be sure each coil has the exact wire length or 72 turns, a sample length wire is wrapped then unwound to serve as a template for six lengths. A suggested coil winding method is to fill a small spool with one length then by holding the copper tube at the lower extension, then start at the plus wire in Figure 2 and temporarily secure this wire to the outer surface of the tube. Next, place the pre—measured spool of wire inside the tube, wrapping down and around the outside advancing clockwise until the 5/8" slot is filled with 45 turns. Then, return this wire back across the top of the coil for 15/32" and winding in the same direction again advance clock—wise placing the second layer spanned for 5/16" with 27 turns. This method should have the second layer perfectly centered above the first layer. After winding this coil, repeat the process by again filling the small spool with another length of pre—measured wire. A very important magnetic response happens as all six coils have their second layers spaced as disclosed.

21) This number identifies the top view of the second layer.

22) Connection pattern for six coils shown in Figure 2. When the unit is driven at start—up (hand crank) for 42 seconds at 2100 RPM, all six jumper wires must be together which means the plus wire goes to the minus wire connected by the start switch. After 42 seconds the load is added to the circuit and the start switch is opened. To double check your connections between the coils, note that the finish wire of coil #1 goes to the finish wire of coil #2, which is top layer to top layer. This pattern then has start of coil 2 (bottom layer) going to start of coil 3 (also bottom layer). When the copper tube with the coils is placed around the rotor, the distance from any magnet to any coil must be identical. If it measures different, acrylic holding shapes can be bolted to the aluminum base, protruding upward, and thus push the copper tube in the direction needed to maintain the spacing as stated.

23) Wires to load.

24) Wires to start switch.

25) Rotational direction which is clock—wise when viewing from top down.

26) Acrylic dome for protection against elements.

27) Coating of clear acrylic to solidify rotor. Do not use standard motor varnish. Pre-heat the rotor and then dip it into heated liquid acrylic. After removal from dip tank, hand rotate until the acrylic hardens, then balance rotor. For balancing procedure, either add brass weights or remove brass as needed by drilling small holes into rotor on its heavy side.

28) Insulation tubing on all connections.
29) Shaft for start purposes and speed testing (if desired). This concludes the parts list for the Mini—Romag.

6.0.1.0. Pyramid molecular vibratory exchange unit.

- Includes an acrylic pyramid located between two large spinning magnets of specific composition
- Purpose is to show that magnetism holds molecules together and that magnetism is the property that unlocks the molecular lock
- Causes living matter to become unseen
- Suggested use is to explore the uses and properties of magnetic energy
- Requires the Romag generator to supply power

This magnetic device will show that magnetism is the property that unlocks the molecular lock. This unit provides evidence that altering the vibration of molecules can exchange matter into a pure energy form that the human eye cannot see. We use the word "exchange" because all matter has a template that exists at a higher vibration, and this unit exchanges matter with it's matching template that is free of environmentally caused changes. Molecules are held together by magnetic force; this force can be alleviated, allowing the molecules to separate, leaving the molecules that are naturally attracted to each other remaining in tact. For example, injury and disease caused by environmental influences are not part of an organisms matching template, therefore, after an organism is subjected to the energy field of this unit, injury and disease are no longer part of the organism.

This unit has an arrangement of pyramids which when magnetically activated, serve as test chambers where matter is exchanged. The magnets that rotate above and below the pyramids produce vortexing magnetic fields that encapsulate the pyramids. Two walls of wires on opposite sides of the pyramids, are charged with flowing magnetic current from the Romag Generator or the Particle Transmuter to produce a magnified SOUND OF VIBRATION that aids in creating the proper field for matter exchanging. The wires that line the pyramids aid in producing REFRACTORY LIGHT which becomes part of the process that makes the object under test APPEAR as though it is not there. The arrangement of hardware causes sound waves to influence the magnetic energy to manifest as pulses. Magnetic pulses produce powerful VIBRATORY CHANGES to the molecular structure of molecules that change the object into energy that human eyes cannot see. What changes is the VISIBLE matter.

PARTS LIST

. An outer aluminum 2" square tubing frame, 50" sq. at the inside measurement, 6 feet high welded construction.
2. Two non-metal support bars located at the top and bottom of frame #1 to hold non-metal sleeve bearings.
3. Two Delrin sleeve bearings, 2-1/2" ID by 4-1/2" OD by 4" long, secured to Parts #2.
4. Two 6" long non-metal shafts that rotate inside Parts #3.
5. Two Delrin 4 feet diameter plates, 3/4" thick that have shafts Part #4 bolted at the center point.

6. One top magnet 4" dia., 1-1/2" thick bonded to one of Plates #5. This magnet is made of 30% neodymium, 21% Boron, 7% nickel, 42% ferrite, charged to a peak energy product of 4.2.
7. A hand crank pulley drive method to rotate magnet #6 at a speed of 2,000 to 2,400 RPM for a charge time of 1-1/4 minutes.
8. One bottom magnet 4' Dia., 1-1/2" thick bonded to one of Plates #5. This magnet has the same exact composition of elements while being charged to twice the power, or 8.4 peak energy product.
9. Are four aluminum corner supports with scale indicators to support the large pyramid assembly, while detecting weight loss.
10. One acrylic base for large pyramid measures 4' square, 7/8" thick.
11. Four triangular acrylic shapes, 3/16" thick with three of them bonded to Part #10, (one removable). These shapes form a 2' high pyramid with the 4 plates at a 45 degree angle, 4' square.
12. A continuous length of flat clean copper coated steel wire 1/4" wide by 1/32" thick. This wire is bent as needed to allow a 1/8" overlap on all seams and corners.
13. A .032" thick copper coated steel wire secured to the top point of Part #11, connected to #12 and extending downward inside the large pyramid.
14. A 1-foot square acrylic base plate 1/2" thick to serve as a bottom for the small pyramid.
15. Are 4 triangular acrylic shapes, 1/8" thick to form a 6" high by 1" square pyramid. Three of these sides are bonded to Part #14, one side is hinged to swing open for placement of the test object.
16. A center point on the inner pyramid that connects to Wire #13 holding this pyramid 6" above base part #10.
17. A continuous length of clean copper coated steel wire .032" thick (#20 wire) to be secured to all seams of Parts #14 and #15. This wire is located on the OUTER surface.
18. One plate of Part #15 that is hinge mounted but not to interfere with wire #17.
19. Two brass support bars on the left side of Frame #1. These bars are 1" wide, 3/16" thick, 54" long, slid into slots cut in frame #1 that are spaced to hold these bars 2' apart.
20. Wire wrapped around Parts #19 total 1200 wraps of .020" thick clean copper coated steel wire spaced at 25 wraps per inch for the full 4 foot distance. The bottom of the wires is even with the bottom of Magnet #8.
21. Two brass threaded rods located at the centers of Part #19 to prevent the wound wire #20 from bending these bars.
22. Two coaxial cable wires circuited from the Romag generator that gets connected to the wound Wire #20.
23. Two brass support bars located at the right side of Frame #1. These bars are 1" wide, 3/16" thick, 54" long spaced apart by 2 feet.
24. Wire wrapped around Parts #23 total 1200 wraps of the same wire size as Part #20. The bottom of these wires is also even with the bottom of magnet #8.
25. Two threaded brass rods located at the center of Parts #23 to prevent the wound wire from bending these bars.
26. Two coaxial cable wires circuited from the Romag generator to go to the ends of Wires #24.
27. A dotted centerline to show that the center of the small pyramid is almost aligned with the center of the side wires.
28. Four corner scales to record the weight of the unit when testing.

29. The rotation is to be in the direction of the arrows as shown in Figure 1.

The unit functions as follows:
The test object, in this case, a live hamster, is placed inside the small pyramid and a little acrylic door, hinged on one side is closed. One panel of the large pyramid is not used but the flat wire remains in place. This open side allows a direct viewing of the small pyramid.

After the magnetic current is circuited into the walls of wires Parts #20 and #24, the top magnet is rotated using Part #7. When the speed is 2000 - 2400 rpm during the 1-1/4 minutes charge time, several magnetic charging actions happen.

A. The wires Part #12 get charged.

B. The wires Part #17 get charged. This charging of the wires causes the top magnet to follow these charges in route to attracting the bottom magnet, which now gets pulled around in the same direction.

C. This rotating of the bottom magnet completes another magnetic circuit between the bottom location of the wire walls Parts #20 and #24 and the 1-1/2" thick side section of this magnet. After the 1-1/4 minute charge time the bottom magnet, being influenced by the magnetic circuit to the walls of wire, continues to rotate serving as a rotating stabilizer that now pulls the TOP magnet around, at a somewhat slower speed. All of this magnetic activity creates sound that is turning into waves that then cause magnetism to come out as pulses.

The center point of this massive magnetic action is the small pyramid that starts a vibration likened to a salt shaker on a shaking table. The hamster has now been changed into a form of energy that the human eye cannot see. What has changed is the VISIBLE matter.

All of the magnetic activity was caused to happen as this newly formed energy was being setup in the wires around the pyramids. This is why the small pyramid is held from above with a length of the same wire, (part #17), a wire that also contacts the wires around the large pyramid. When it is stated that the hamster is subjected to VIBRATION, we are referring to an enhanced molecular vibration. ALL matter vibrates at the molecular level and enhancing this vibration is a natural process. This molecular shaking does not cause harm to the hamster.

Comments about the wire walls:

These wire walls are wound with .020" thick clean copper coated steel wire for a reason. This thinner wire, when pulled as snug as possible, responds with a desired LIVELY BOUNCE. This action produces the stated, 'sound of vibration.' If the wire used were thicker, or just copper, the response would be likened to a THUD without the needed vibration action.

Thus, in order to wind the wire wall tightly, the threaded brass rods are used to keep the brass bars, Parts #19 and #23 from bending.

Comments about the Magnet Mounting Method:

These magnets will constantly attract together with a south face from the top magnet attracting to a north face on the bottom magnet. Flange bearings are used to keep the magnets at their set space distance.

Of great importance is the requirement to use all non-metal shafts, bearings and bearing supports both above and below the magnets.

Another point--these magnets are NOT to be made from an assembly of smaller magnets but cast as one single 4-foot diameter magnet, 1-1/2" thick. This one-piece structure causes the magnets to respond with the required activity throughout the casting with 21% Boron doing a special work (when blended with the elements listed).

LOCATION FOR TESTING

The bottom magnet needs to have a clear DRAW-FACTOR to the Earth. Therefore, the best testing location is outdoors on regular soil and NOT on cement. This unit demonstrates that atoms can be changed without heat. Atoms are magnetic molecular structures that have unique RYTHMIC VIBRATIONS and are in a constant state of change. The bottom line for understanding ALL universal action and events is that there is NOTHING BUT energy, which is in a constant state of change. All energy is ALWAYS forming and reforming until what we call MATTER results.

All matter is made of various combinations of magnetic molecular structures which maintain a unified field of cohesion through a synchronistic vibration. The energy we call matter is constantly changing. Some energy is systemically changing faster than other energy. The molecules of an energy system, a rock for example, are held together by an attract force that is unique, harmonious, and synchronistic. Objects attract to each other o the degree they are similar. For every structure that is known (whatever name we have given it) there are equal structures being made, off shoots, if you will. Every component of energy (or matter) generates energy that is constantly vibrating and producing the pattern of its structure. All matter sings a unique song that can be slowed down and formulated into additional matter under the right conditions. For every energy structure combination that we perceive there is a structure combination outside of our perception, and these structures blend into an unending variety of combinations not unlike the vast array of color combinations available within the color spectrum.

A change in substance NEED NOT NECESSARILY BE a change in molecular structure. Molecular structures can (and do) maintain their OWN integrity while simply incorporating themselves into DIFFERENT structural formations.

If the PMVE unit is used as a tool to expand what has just been stated, it will be a great advance for science. The advancement will be in finding that an intertwining of magnetic circuitry produces the ability to MONITOR what is called a magnetic pulse-rate.

For example, when the hamster is under test inside the small pyramid the very STRUCTURE of this animal becomes the FOCAL POINT for the conductive activity within the total generating force. The hamster is made of elements with every single element emitting three different TESTABLE magnetic responses that are exclusive to each element. A) Each element has a given magnetic pulserate, B) Each element as a given magnetic intensity, C) Each element will respond with a GIVEN polarity depending on the conditions surrounding it. Thus, while the hamster is in this new PURE ENERGY state we might find that to exist as this particular animal, the creature must have certain essential properties uniquely specifiable for each part of each element. We might say the properties are essential in the sense that as the PMVE unit is shut down all of the elements must be conserved. Naturally, the proof of conservation is the fact that the hamster is unharmed.

The Universal Mind is offering this unit to us to expand our understanding of the Universe and to heal the ailments we have brought upon ourselves through environmental pollution. The human body is designed to live for countless years if it is free of disease and impurity. Some people who have mastered the ability to raise their vibrations are naturally performing a function very similar to this unit. These spiritual masters are known to heal their own bodies and those around them. This unit can assist people in learning to work with their energy systems to stay healthy and live free of physical problems. There is no flaw in the human design, it is the choices that we make that create the limitations we experience.

The applications of this unit are nearly endless. This basic model can be extrapolated from to produce a vast array of devices incorporating this unit's principles. One day GROUPS of these units just might be arranged to REPLICATE all kinds of elements from other elements. People will use these principles to explore other dimensions, to travel by teleportation, to create unimaginable works of art, to explore micro-cosmos and macro-cosmos, and perform countless other endeavors.

6.1.1.1. nTiAlCo-B Metal

The next following 3 items all require this metal to function properly:

1 - Particle Transmute
2 - Magnet Motor
3 - Heating Unit

This metal welcomes magnetism, yet is nonmagnetic (meaning a magnet will not adhere to it).

This metal does not get polarized into a given magnetic charge making it ideal for assisting in the attraction of neutral magnetism.

This metal is designed to work in free energy motors, generators, and other units

This metal can assist in reducing pollution, cleaning the environment, helping recycle energy and waste, providing transportation, generating energy.

This metal is light in weight, yet has the strength of steel.

This metal has a zero coefficient of thermal expansion when heated or cooled.

This metal has a CRYSTALLINE five-fold symmetry structure that would require extremely high heat to melt.

This material has been classified as "Quasi-Crystals", a new phase of solid matter that is neither crystalline nor amorphous.

This metal when under stress, will not exhibit disruptive seaming.

This metal can be used as a coating on other metals, making the coated metals considerably stronger.

The contents are as follows: Aluminum, Magnesium, Zinc, Manganese, Copper, Red Brass Cast (Copper, Zinc, Iron, Antimony, Nickel, Tin, Lead, Phosphorus, Sulfur) Chromium, Titanium Dioxide

SOME RESEARCH AND CALCULATIONS ON TiAlCo-B METAL:
TiAlCo-B HAS A DENSITY OF 5.63. TiAlCo-B HAS A MELTING POINT OF 12,000 DEGREES FARENHEIT IF PROPERLY POURED. THIS IS INDEED A LIGHTWEIGHT METAL WITH A VERY HIGH MELTING POINT. FOR COMPARISON, TITANIUM HAS A DENSITY OF 4.54 AND A MELTING POINT OF 3020 DEGREES FAHRENHEIT. NO OTHER STRUCTURAL ALLOY COMMONLY FOUND IN THE METALLURGICAL DATA COMES CLOSE TO TiAlCo-B. TITANIUM HAS A LINEAR COEFFICIENT OF 8.0 PER 1200 DEGREES F., COMPARED TO TiAlCo-B WHICH IS 0.

Blending the Metal

A vacuum chamber is not recommended to make this metal, as it will prevent the necessary molecular interactions.

This process requires four crucibles, with separate temperature controls, that will allow the metals to be poured from one crucible to another.

First, in crucible #1 melt 3.85 pounds (10.8%) Magnesium at 648.8 ^{0}C. Next, cool to 419.58□C. at which point 4.28 pounds (12.0%) of Zinc is added as chunks into the Magnesium.

(NOTE: all blending of elements requires mixing.) The temperature should not fall below 419.58□C.

The Zinc, considered the dispensable element is not dispensable in the sense of doing without, it contributes to the transformation process. The Magnesium ignites when it is heated because it is attempting to redistribute it’s energy in the easiest manner. When Magnesium is offered magnetic energy and a alternative redistribution path, it will utilize the energy and basically heat itself to the required temperature. The mini romag is ideal for providing this function to the Magnesium. Next, in crucible #2 heat 10.59 pounds of Aluminum (29.7%) melted at 660.37□C. This Aluminum is then (over a period of several minutes) poured into the Magnesium/Zinc mixture using continuous mixing. The Magnesium, Zinc, and Aluminum blend is then heated up to 1,000□C to prepare it for the next step. In crucible #3 melt 3.17 pounds of Manganese (8.9%). This Manganese is then cooled to the temperature of molten Copper. Then add 5.24 pounds (14.7%) of Copper powder. This adding of the Copper should be slow with the needed heating, so as not to drop the temperature. The temperature of these two elements is then adjusted to have 4.85 pounds (13.6%) of Red Brass Cast added. This Red Brass Cast must be made of

Copper - 84.15%, Tin - 4.40%, Lead - 5.42%, Zinc - 5.13%, Iron - 0.17%, Antimony - 0.12%, Nickel - 0.58%, Phosphorus - 0.007%, Sulfur - 0.019%. After this blending is completed, the Manganese/Copper/Red Brass Cast is slowly added to the Magnesium, Zinc, and Aluminum blend (which should be at 1000□C) The heat on this blend will next be raised up to 2,000□C. in readiness for the next process requirement. Next, 2.25 pounds (6.3%) of Chromium is melted. Next, added to the Chromium is 1.43 pounds (4.0%) of Titanium Dioxide.

VERY IMPORTANT: Before the Titanium Dioxide is added to the Chromium, the blended elements (all of which are in one crucible) must be up-heated to 2000□C.

The MOMENT they reach the 2,000-2,100□C., IT IS THEN that the Titanium Dioxide is added to the Chromium. The time lapse should be as short as possible between when the Titanium Dioxide is mixed with the Chromium and these two blended items are added to the other elements. Thus, after a minute of mixing these two elements, they are quickly poured into the crucible containing all the other elements. The mix MUST NOT go below 2,000□□C. The metals, when blended, should be at no less than 2,000□C. and no more than 2,100□□C.

Finally, all the metals are stirred for one minute and the mixture is quickly poured into a mold.

SILICON NITRIDE MOLD

A preheated mold of this material should be at 700□C. and the mold should be filled AS SOON AS POSSIBLE. The mold is then placed in a room set at 22□F. with air blowing above and below the mold to cool it quickly. After approximately 4 to 5 hours, it will be cooled and can be removed.

This process, if accomplished as instructed, will produce a METAL with the qualities herein stated.

6.1.1.2. Particel transmuter

- Unit produces vast amounts of neutral flowing magnetic current for numerous uses
- Requires special alloy
- Capable of powering 4-10 HP Magnet Motors
- Provides magnetic energy that can be transmitted through space
- Requires mechanical startup

The subject matter is a Particle Transmuter. This is a unit that works on the magnetic principle of attract—attract. The following explanation will summarize the working unit. Please review the drawings to clarify the text.

This unit uses a method for generating power from a source not commonly tapped. This unit works within a relationship between particles that exist on the outer rim of the earth’s surface (ionosphere) and particles in and on the earth itself. The function of this transmuter is to create a structure of varying particles to produce a source of energy. The magnetic structure within the unit attracts the necessary particles needed to generate the electrical impulses to produce an ongoing, continuous flow of energy. This unit is so fundamentally important in the field of magnetic energy that it can be likened to the invention of the wheel, it can lead to countless discoveries in the future. The drawing shows a brass chimney two and one-half feet high consisting of an outer chimney, nine inches diameter with a six inch diameter pipe firmly center—mounted inside the nine inch pipe.

These chimney openings lead into the main unit. There is a transference of particles which is the main purpose of the chimney structure. The chimney as viewed is attached to the generator itself which also has two housings.

The inner housing is twelve and five—eighths inches in diameter. It is completed with a dome lid which covers the inside and a plexiglass covering which seals the outer housing. On the following pages will be found all the necessary information for the assembly of this Transmuter.

Part # 1 is the inner housing that contains the mechanism of the generator. It is constructed of aluminum and is 12—5/8 inches outside diameter by 6—3/4 inches high with a 1/4-inch wall thickness. A slot is cut along the bottom measuring 1—3/4 inches high by 15 inches long which is used to accommodate the chimney structure. Holes are drilled into this wall to hold other parts located within.

Of paramount importance is the fact that this part #1 has its inner wall surface completely knurled from top to bottom. Particles that strike this inner knurled surface are caused to be defused by the angles of this knurled surface thus contributing to the needed bombastic particle action within the unit. As the magnetism takes a counterclockwise rotation the knurled housing holds and utilizes the needed molecules that would otherwise (if there were no knurling) simply penetrate the wall.

Part # 2 is an outer Aluminum housing 15-3/8 inches diameter, 8 inches high and .030 thickness. Both housings are secured at the base. There is a plexiglass ring 1/2 inches thick which goes between the outside of inner wall #1 and the inside surface of wall 2 which then serves as a sealing material to protect the unit against the elements. Part #2 has the same size slot at its lower portion to accommodate the chimney structure. The purpose of this outer housing is to balance out the structure of the attached chimney which equalizes the particle flow. This .030 aluminum outer wall is not adequate to do the necessary work without being coated on its outer surface with a special coating process. The function of the coating on the transmuter’s outer aluminum wall is to establish a magnetic barrier. The metal used for this coating process welcomes magnetism and completes the total magnetic pole needed for the Transmuter.

The material used for coating (TiAlCo—B) is of the greatest importance. The metals combined and used in this metal coating process are needed to insure the proper particle actions. The actual coating process calls for an exacting application movement within a certain time frame along with proper metal temperature, cooling and final baking. To finish unit, the top Plexiglas ring is snapped into this outer wall at the top. The inside diameter of the Plexiglas fits snugly around the brass spacer located under the dome. This then allows the dome to swing open and use the top of the Plexiglas ring as a safety support while the dome is open. The 8-inch height gives this outer wall a slight extension that protrudes beyond the bottom plate of the Transmuter. This gives a greater assurance of coverage for the outer set—up pole and protects the Transmuter from dust blowing up under the unit.

As the subject of this metal is further defined it will show how particles enter the space between these two walls, are circulated, transmitted and are then utilized by entering the main Transmuter for use. The outer wall then has a thermos—bottle effect preventing the escape of useful particles and at the same time affording exit points for unwanted particles which then return to the earth's particle balance.

Part # 3 is an aluminum base measuring 15-3/8 inches outside diameter. The two thicknesses of this base can be seen by viewing Figure 26. Notice the thicker section which measures 12—5/8 inches and is 3/4 inch thick. This diameter accommodates Part #1. The thinner portion of this plate goes under Part #1 to form the base mounting for Part #2.

Part # 4 is a dome shaped piece of nonmagnetic metal measuring 12—5/8 inches outside diameter, 7/16 inch thick with a 2-inch high rise in the center. This dome has an opening cut ½ inch by 2 inches starting 2 inches from the center point. This opening is covered with a seal of Plexiglas. This dome shaped part must be made by being poured into the proper mold material, using TiA1Co-B metal. The dome then becomes a conductor of the particle activity that is generated on the rotary magnets. It serves as an Incoming and outgoing point of transference which aids in the particle exchange thus contributing to the generated energy within the unit. The combination of the metals combined and used in this metal dome is needed to insure an accurate conduction contributing to the proper amount of particle activity.

The small opening in the dome does afford the operator a chance to view the brushes while the unit is running, however this opening serves a very important secondary purpose. As the particles travel around in a counter—clockwise direction, this opening helps to stimulate the particle flow which in turn affects the interchanges of the particles and this action is aided by an atmospheric stimulus. To gain a deeper understanding of just how important the dome is in relating to the function of this Transmuter we need to view the 7/16 inch thickness of the dome itself. This heaviness and thickness of the dome does not have to do with any air pressure because the chimney openings are a vent directly into the Transmuter. The thickness of this material simply aids and constructs a process of slowing and capturing particles. We see therefore why the material of the dome is of the greatest importance when viewed from the particle redistribution standpoint.

Looking at the window in part #4, we note the 1/2-inch by 2-inch window is covered by a Plexiglas plug. Air does not enter the Transmuter through this slot. When we speak of the atmospheric stimulus we are speaking of the atmosphere built within the unit and not an external. Part #5 These are mounting parts for the dome which include a hinge pin from which the dome swings and a latch to lock the dome tight.

Part # 6 This is a brass extension ring 12—5/8 inches outside diameter, 7/8 inches high with a 1/2-inch wall thickness. This part is secured to the top of the inner wall part #1 in such a manner as to not make magnetic contact with it. First a ring of .030 mica is glued to the top of Wall #1 and then counter—sunk nylon screws go into this brass ring holding it firmly to part #1. The particle activity generated between wall #1 and the dome is such that these parts must not make contact. An "O" ring groove is cut on the top of this brass extension which allows the dome to be sealed against the elements. The dome is mounted on a hinge pin because of the need to quickly swing the dome open. There is a radical change to the elements inside the

Transmuter which creates a bombastic effect thus building a pressure within the unit. This pressure is part of the process which changes the action from attract—attract to attract—release. By swinging the dome to one side the pressure is released and the unit stops. This also serves as a shut—down safety feature.

Part # 7 This is a brass 9-inch pipe, .025 thick, 30 inches high; and a 6-inch .025 thick, 30 inches high, center—mounted within the 9-inch pipe. Secured to the 9 inch chimney with brass braces is a 22-inch diameter rain cover, .025 thick held up about 4 inches. This cover protects the interior of the pipes against the elements and it also aids in the above ground amplification of particles. The brass base fittings and pipe seams are all continuous welded. This welding prevents wind from going into the unit and upsetting the particle flaw.

Part # 8 This is a 7/8-inch thick brass shaft driven into the ground approximately 5 feet and is coupled to the center post of the unit. This shaft becomes the point of contact for the particles that are drawn up out of the ground which is needed for the particle conductive process. This grounding also serves as a safety feature. The unit will not function without this shaft. See Figure 1.

Part # 9 Are mounting legs to support the unit and prevent damage from wind of vibration. See Figure 1.
Part # 10 Is a center post support bolted to base #3. Figure 3 shows this post support. Part #11 Is a center post which is the base of the central construction and is secured into Part #10. It is important to note that this shaft has three separate diameters with a threaded portion on the top. When parts are stacked on this shaft the parts having smaller bores do not contact parts having larger bores therefore the shaft sizes serve as spacer collars. The Center Post,

Part # 11 is made of a copper/brass metal combination that is 7—5/8 inches long. The bottom section is 1- inch diameter, 2—7/8 inches in length. The middle section is 7/8-inch diameter, 1—3/4 inches length. The upper section is 3/4-inch diameter, 2—3/8 inches length with a 5/8-inch thread, 5/8 inches long at the top.

Part # 12 Is a tube of Mica insulation that goes between the center post and the center post support. As particles are drawn up out of the ground they do not short—circuit into the base plate #3.

Part # 13 Is a .035 thick copper screen which covers the inside surface of part #3. This screen is secured to a .030 thick Mica insulation plate which is glued directly onto plate #3. Care is taken to prevent any part of the screen from contacting either the inside knurled wall or any parts. When particles transmit at this copper screen, magnetism is built up and this magnetism must not be drained off by contacting metal.

Part # 14 Is an oil impregnated bronze bushing. This bushing turns free on the center post and becomes the mounting frame for other parts. This part is shown in Figure 5.

Part # 15 Is an aluminum 2-inch spur gear bolted to the bottom side of bushing #14. See Figure 5.

Part # 16 Is an aluminum bowl pressed onto Bushing #14. This bowl has sixteen 1/8-inch holes bored into its outer rim. See Figure 6.

Part # 17 Is Graphite Rope Packing bonded into Part #16. See Figure 7.

Part # 18 Are sixteen 1/8-inch diameter copper stranded wire ropes. These are secured into Part #16. When Part #16 is driven these 16 copper wire ropes, which are flared on the ends, cause particles to be driven in the needed direction. This particle flow pattern serves very particular generating needs and therefore is reviewed later in exacting detail. The needed direction for the particles to flow is partially up toward the bottom of the coils located in the armature plate. To accomplish this, the flared ends of the wire ropes are flared vertically, having a slight fan angle to drive particles upward. Each wire rope is composed of 75 copper strands, .010 thick clean (non-— insulated) copper.

Part # 19 Is an aluminum metal that serves as a center Hub for the Main Armature Plate. This hub also carries other parts as it rotates on the center post. Figure 8 shows how this hub goes above Part #16 but does not make direct contact with it.

Part # 20 Is an oil impregnated Bronze Bushing that is pressed into Part #19. See Figure 8.

Part # 21 Is a 32 Bar Commutator that is pressed onto Part #20. These two parts turn as one around the center Post. See Figure 8.

Part # 22 Are 6 Copper Weights, secured to bottom of Part #19, Center Hub. See Figure 8 and 23.
Part # 23 Are 6 nonmagnetic Flat Springs secured to weights #22, shown in Figure 23
Part # 24 Are Swivel Pins to allow the weights to move up and down. When the Center Hub is not turning at a speed to lift weights, these weights are pressed into graphite Rope Packing #17 by two forces, first by gravity pulling down on weights and second by the 6 attached springs that act as a control factor that push the weights into the graphite packing. This is achieved by centrifugal force. See Figure 23

Part # 25 Shows 5 Mounting Posts for 5 Spur Gears. This is shown in Figure 9.

Part # 26 Are 5 Spur Gears that rotate on parts #25. See Figure 9.

Part # 27 Are 5 Posts that serve only as mounting points for 5 other parts which are shown in Figure 9.

Part # 28 Is a four-inch diameter Spur Gear that engages the two-inch spur gear #15 which turns on Center Post #11. See Figure 10.

Part # 29 Is a Shaft that has Gear #28 locked onto it. This shaft protrudes out of the bottom of the unit and is driven during the start—up phase. See Figure 16.

Part # 30 Is an oil impregnated Bushing that is pressed into Base Plate #3. Shaft #29 turns in this bushing. See Figure 16.

Part # 31 Is a twenty tooth Spur Gear also secured onto Shaft #29. See Figure 16.

Part # 32 Is a Transfer Gear with twenty teeth that engages Gear #31. This gear turns on a post supported by Plate #3 as shown in Figure 16.

Part # 33 Is a thirty tooth Spur Gear that engages Gear #32. See Figure 16.

Part # 34 Is a Shaft that has gear #33 secured to it and turns in a lower bronze bushing as shown in Figure 16.

Part #35 Is an oil-impregnated bronze Bushing pressed into Plate #3, that allows Shaft #34 to rotate. See Figure 16.

Part # 36 Is a twenty tooth Spur Gear that is also secured to Shaft #34. As Gear #33 is driven, it turns Shaft #34 which also turns Gear #36. See Figure 16.

Part #37 Is a twelve-inch diameter Internal Ring Gear made of Brass. See Figure 17 for a clear view. This gear is driven by gear #36. As this large gear goes around, it causes the five other gears #26 to rotate. There is a gear speed ratio of three-to-one between gear #15 and gear #36. As Shaft #29 is driven during the start—up phase, it turns two separate gears on different tracks. First, the lower gear #31 on shaft #29 drives the transfer gear #32. This turns gear #33. Gear #33 turns Shaft #34, which has gear #36 secured to it and it drives gear #37. The large four-inch gear #28 drives the center post gear #15, which turns Bowl #16. This gear assembly is shown in Figure 10 and a full view is shown in Figure 16.

Part # 38 Are five stationary Rotary Bar Housings. These parts snap onto five posts #27. See Figure 11.

Part # 39 These are five stationary Rotary Bars that have 3 brass wedges secured to each wheel, that turn free in Housings #38. There is a magnetic action in these brass wedges caused by copper stranded wire ropes #18 in the magnetic Dispenser #16 which has a relationship to the Armature speed. See Figure 11.

Part # 40 These are Brass Shafts that allow Bars #39 to rotate. See Figure 11.

Part # 41 These six plates are called Stop Gauges. They have three Brass .015 thick wedges secured to the top of each. These wedges are secured to the tops of the six twenty—tooth spur gears. These six plates of three wedges each rotate in the same direction and serve to redirect power as needed when they are driven. See Figure 11.

Part # 42 Is the chimney mounting location. Notice the center of the chimney opening is aligned in the area of the two stop gauges. This location gives these stop gauges the opportunity to maximize their use by being in the main particle stream. See Figure 11.

Part # 43 Is a set of forty-four magnets. See Figure 12. These magnets are glued into two brass rings which are machined to accept them in the proper magnet pattern. When assembled, this part is secured to the inside wall of part #1. When mounted, the bottom of this ring of magnets is spaced above the six stop gauges with one—half-inch clearance. Milled into the brass ring are five slots which allow the stationary rotary bars #38 to fit through and protrude out of the top. The magnets are each bonded into a jacket of metal wire before being secured into the brass rings. This fullsize view of the actual machined brass and wire connections are in Figure 19 and 20. These metal wire jackets serve a critically important function as connective distributors and will be explained in detail later in this disclosure.

Part # 44 Is the armature plate. This plate is made by pouring TiAlCo-B metal into the proper mold and finishing the surface with light machining. The finished plate size is 3/8 inches thick, 12 inches diameter. In order to assemble this plate it must be bolted to the armature hub which has the commutator connected to it, therefore the shim that gets bolted between armature hub 19 and the armature plate is given the following number.

Part # 45 A piece of non-magnetic shim stock. See Figure 16 (See Armature plating mounting.)

Part #4 6 Is a 1/16-inch thick graphite liner that goes into each of the 24 slots. See Figure 13

Part # 47 Are .010 thick mylar high voltage insulation, one piece per slot. Fig 13

Part # 48 Are a total of 24 coils of #18 insulated copper wire. Fig 13

Part #49 Are 24 holes drilled into Plate #44. Each hole 1/8 inch diameter. Fig 13

Part #50 Are 24 stacks of plastic magnets, one stack per coil. Fig 13

Part #51 Are 24 brass clips to hold the plastic magnets inside the coils. Fig 13

Part #52 Twenty—four pieces of mylar insulation, one piece under each clip. Fig 25

Part #53 One insulation ring to hold the coil connections. Fig 25

Part #54 Are eight jumper wires for the commutator connections. Fig 25

Part #55 Are 16 jumpers to change the 32 bar commutator to a 16 bar commutator. Fig 25

Part #56 Is insulation tubing for all connections.

Part #57 Is an upper magnet ring that is made identical to the lower magnet ring which also has wires wrapped around each of the 44 magnets. Since rotary bars are not mounted above the armature plate there would be no need to machine openings to accommodate them. This upper magnet ring is mounted to housing #1. The bottom of this ring goes above the Armature plate not more than 1/2 inch or less than 3/8-inch clearance. See Figure 14.

Part #58 Is a dome shaped brass particle distributor. This part remains stationary and is screwed directly onto the center post. Figure 14.

Part #59 Is a brass brush holder base that is secured to housing #1. Figure 15.

Part #60 Are six sets of carbon brush and brush holders spaced (30 degrees apart. These brushes transfer the generated power from the commutator to the six coaxial cables and out of the unit. Fig 15 Part #61 Is a cleaning brush with a coaxial cable attached to it.

The following review of Figure drawings #16 on through #26 is next explained before the scientific understanding of this unit begins. Figure #16 Is a side view of the Transmuter without the chimney structure. This view shows the parts as they are assembled inside the main Transmuter housing. Notice the base which extends to include the outer aluminum wall. This is the best view for showing the start—up splined hole under the unit. It is advisable to have this view layed out before you, as the pulse rate is being explained. The close proximity between the upper and lower magnet rings shows the tremendous magnetic field that the armature is utilizing for generating power.

Figure #17 This top view shows the base and the gear train. It shows the close proximity between the sixteen copper wire ropes and the six turning stop gauges. Notice the direction of rotation for the wire ropes is the same as the close edge of the stop gauges. A particle wind builds a given circulation that does not conflict between the stop gauges and the particle dispenser. Less than 1—1/2 inches away from the moving wire ropes arc the five stationary rotary bars. These wheels gain power from the wire ropes and continue to spin sending their built—up charge into the armature. It shall be noted that when the lower magnet ring is installed these five rotary bars will each be located in a magnetic area whereby the magnetic power from the magnets alone will cause the wheels to spin. The three brass wedges on each wheel respond to the magnetic power by giving rotation similar to a small motor.

Figure #18 Shows a top view of the parts inside the inner wall. This view shows the six copper weights located inside the graphite bowl. The lower magnet ring is now in place which shows how each of the five stationary rotary bars is locked on three sides by permanent magnets.

Figure #19 Is a magnet ring. This is a tracing of the actual .060 brass plate. This frame for holding the magnets is held apart on the outer rim by a brass spacer 5/8-inch high, 1/4-inch wall thickness. These plates are screwed into this spacer maintaining the outer size. The inner size is maintained by having 5/8 inch spacers hold the plates apart when the magnets are glued into the rings. All of the magnets face the same polarity or north on one side, south on the other.

Figure #20 This drawing shows the wire connections between magnets.

Figure #21 This drawing shows the placement of one magnet ring above the other. The magnets are not in line. The magnet rings face north to north.

Figure #22 This view shows the proper placement of the plastic magnets in the Armature. The top magnet ring will pull plastic magnet stack A as shown. The bottom magnet ring will pull stack A in the same direction and finalizes their pull when located as shown. All 24 stacks of plastic magnets must be facing this same direction to cause counterclockwise rotation.

Figure #23 Is a view of the armature hub and weight mounting method.

Figure #24 Is a drawing of the chimney structure with an isometric view.

Figure #25 Is a view of the armature complete with coils connected to the commutator.

Figure #26 Is a cut—out view of the Particle Transmuter.

BASIC THEORY AND REASONS FOR ATTRACT-ATTRACT

In order to observe the force of attract—attract to attract—release, it is necessary to first gain a knowledge of the total picture beforehand, otherwise the actual viewing of this attract movement will not be properly understood. A starting point would be to explain the statement that, "This power source is not predicated on a continuous flow of energy but predicated on the consistency of particle action within the earth’s pressure flow." This Transmuter does absorb magnetic power to run continuously, it is however a conduit through which the earth's particles flow and thus maintain their particle balance. It is the consistency of this particle action that needs a closer understanding.

Everything that happens within the earth’s pressure flow always returns to a particle balance. Because of limited ability to observe particles during their interchange process, people have determined that there must be an annihilation of particles because they seem to disappear, but this is wrong. They are never annihilated but always return to a particle balance. Understanding this particle balance within the present teaching on electricity which states that electricity is the flow of electrons through a conductor becomes extremely difficult when trying to grasp the balancing return needed.

A closer understanding would be to state that the conductor which has positive and negative particles simply exchanges them in such a manner as to create a new particle flow.

When this unit attracts particles from the ground and attracts particles from the earth’s rim, they join inside the Transmuter to form a new structure that manifests itself as magnetism inside the Transmuter. This magnetism then creates a process that produces a new form of flowing magnetic current. However, when this energy is used, it produces particles which then return to the earth’s pressure flow, thus maintaining a continuous flow in this system. The teaching on the conservation of energy, which is that we never get something for nothing is the teaching accepted at the present time. This teaching stems from a statement by Albert Einstein, where he held to the view that the relative relationship of one particle to another did not matter, which would then suggest that redistribution of particles was not possible. He was in error and time has proven this to be so. You see there has never been a problem of redistribution. The problem has always been the manner in which the redistribution takes place.

Our current technology produces energy that is not redistributed without negative consequences to the environment. When a molecular structure breaks down, there is a transfer of energy to the greatest part which is the attracting force. When this attracting force can be harnessed, vast amounts of energy become available. Therefore we see that all parts are not equal in producing a generating force; the proper attract fields must be established using the proper elements. The conductive materials that go into the construction of this Transmuter are of the greatest importance and need to be observed closely. It will be shown as this review unfolds that the attract—attract happens in many ways which therefore commands a closer study. Unfortunately the principle of attract—attract has always been rejected because attract—repel has always been considered a sound principle. When, in fact, it does not properly utilize the magnetic field to its greatest advantage. Inventors have also tried to build continuous motion devices by using the power of repel/repel by allowing the magnets to come together by blocking out magnetism and then pulling the blocking material free to capitalize on the repel power between the magnets. The structural polarities of this earth negate this kind of power from being used here because there is an unequal balance in repel-repel and it does not line up with the universal system.

Thus we have limited ourselves as we refused to receive greater knowledge from the Source of its origin. That being stated, let us continue. When this unit is driven at the start—up phase it generates a magnetic pulse within, that comes from a parallel source outside the earth's atmosphere which is the beginning of attract—attract. Now as these particles come into the Transmuter from above, they interchange with particles from the ground, forming a new molecular structure that is manifest inside the unit, thus becoming the driving force. The Transmuter is therefore as stated only a conduit to what already exists. The radical change to these elements as they converge, with the excesses held in the copper screen inside the unit, produce a captivity of particles that when released add to the existing power, and so the drawing power in the unit that attracts these particles is the result of eighty—eight permanent magnets pulsed in a timed sequence which then allows neutrons to exchange at a tremendous rate, drawing on an inexhaustible source. Neutrons of themselves are not pulsed individually in a one, two, three fashion but are joined into groups of neutrons which are then called magnetrons and as these groups form they are then pulsed as individual groups. There is also, we might note, concentrated in this pulsing a resonance of frequency made up of sound waves.

When these sound waves are sent out into the ionosphere they attract particles within the same frequency thus forming not only new but extended groups of magnetrons. The rotating armature inside this unit sets up the necessary attract pulse rate. By the pulse rate we speak of that magnetic field on the earth's rim which is now utilized and formed into energy. As this energy is flowed through rows of permanent magnets located inside the Transmuter, this energy travels at the speed of 182 pulses per every 4.8 to 5.0 seconds. This pulse action then causes the Transmuter to function at a pulse figure of 873.6 to 910.0 which is the range of pulse that equals the revolving speed of the armature at the high and the low points. In order to activate this armature speed, the magnetic circuit of 182 is completed through a precise arrangement of magnetic material located inside the armature. Therefore, the pulse rate is in fact pulsed by a ratio as needed and supplied from above and from below, equaling 182 pulses as stated. As this pulse is further defined, it will be understood how in fact each magnet pulses twice during one complete pulsing circuit. The precise arrangement of magnetic material located inside the armature, which was mentioned as being needed to attain the magnetic circuit of 182 pulses, is the thickness and number of plastic magnets. (Plastic magnets composed of 24 pieces in each coil— 3/8 inch by 1 inch — .030 thick.) A magnetic pulse time—factor happens as the magnetic pulse travels from one plastic magnet to the next until all plastic magnets are pulsed. This happens in each slot respectively. Thicker plastic magnets would result in using less magnets and the timing would be wrong. This timing directly effects the speed of the magnetic pulse as it travels through all 88 magnets.

The strength or charge of the plastic magnets is not a great concern because the pulse does not leave the Transmuter due to the pulse strength. The pulse releases itself to the attract force of the atmosphere after the pulse reaches a given accumulative speed. This release condition is a result of the momentum built—up and accelerated by being pulled on attract through 88 magnets which is the number needed to arrive at the needed accumulative speed. The purchasing of these 88 rare earth permanent magnets were at the time the best available for purchase. Today however, neodymium magnets are available for purchase which could lead to error, in purchasing based on power. These more powerful new magnets should not be used because this entire magnetic assembly was designed for standard rare earth magnets. That is not to say a unit will not be designed for neodymium magnets because as this unit is understood the door of understanding will be opened to more powerful usage. And so we conclude on this thought. Let us look at the Armature Construction for rotation. The direction of rotation for this Transmuter isn't determined by where this unit is located as to area because the earth's gravitational pull does not control the magnetic sequence in the Armature, nor is the pulse rate predicated on gravity and its principle, in that we have come to understand that gravity is simply compressed magnetism. We repeat, gravity is simply compressed magnetism. Therefore, all things working together achieve a balanced unit. However the magnets in the Armature do determine in which direction the attract—attract will be manifested. With a new understanding of gravity we now have an explanation as to how a pulse leaves the Transmuter and how it is guided back to the Transmuter after being formed into particles. This can be understood only if science is willing to free itself from the confinements of set theories that they have attributed to the speed of light. This mental boundary must be broken and expanded. In order to understand how we see light waves we must consider that the particles that become light travel from the sun in the form of pulses at a rate four times faster than recorded light waves. As these particles contact other molecular structures (in this case the Earth's rim) they take on an elongated form and in so doing have a slowing action which is viewed in a waveform and then observed.

When a magnetic pulse is sent into compressed magnetism (gravity), the pulse moves at speeds not unlike the speed of light pulses. One might ask, "Why don't the light waves in our atmosphere become a speed limiting factor to these magnetic pulses?" The reason the light waves are not a speed-limiting factor is because although these magnetic pulses exist in the same space as the light waves, they do not vie for each other's attention. They are separate energy forces. Magnetic particles and light particles simply go around each other.

We see therefore the magnetic pulse traveling upward moves at so great a speed that it in fact creates a magnetic track which becomes a guide for the pulse returning to the Transmuter. This assessment shows that the speed of light, although constant, is not limited to a given speed rate.

To be a constant and maintain a specific speed rate are two entirely different thoughts. Light goes through an acceleration process as the pulsed particles leave the sun and are slowed, depending on the nature of the other structures in their path. It is important to broaden our understanding — and learn that light in the universe is traveling at different speeds. Drawing 21 shows one ring of magnets above the Armature and one below the Armature. The actual distance between the upper and lower magnets is one and one—eighth inches.

Figure 21 shows these two rings of magnets, one colored in blue and one colored in brown.

Notice that the magnets are placed between each other as opposed to being directly in line. With the upper magnet ring facing like polarity to the lower magnet ring which is north to north, one would think that this magnet placement would still have a total repel manifest between the upper and the lower magnet ring. When holding one magnet ring above the other in the position where it will be mounted, no repel can be felt. This condition is partly caused by the method for containing each magnet's power closer to its source. The magnets' lengths are 3/4 inch deep or high, which allows for a metal wire jacket to be completely encased around each magnet. This creates a distance that separates the one side of the magnet further away from the other side which contributes to the time lag between magnet pulses as will be shown later.

The benefit to viewing gravity as compressed magnetism is that we can then properly evaluate the energy being transmitted through this force field. All objects moving toward the earth do so because of two distinctly different forces, one pushing the object and one pulling the object.

Of greatest importance is that there cannot be one of these forces without the other. This understanding of the force keeping objects to the earth will lead to a new freedom of air and space travel. It will be a simple matter to exit the earth's environment by now using a "lift principle", and a spherically shaped, magnetically charged space ship can travel at speeds that are not hindered by light particles because they simply accommodate another flow.

The method for containing the magnetic power of each magnet is to wrap a .032 metal wire completely around each magnet, taking care not to let the metal wire actually touch the magnet. A .010 mylar insulation is first wrapped around the magnet before the metal is secured.

When the Transmuter begins to function, these wires serve a critically important function as Connective Distributors. They distribute an energy flow by properly containing the magnetic power of each magnet, and at the proper pulse point release a harnessed energy.

Prior to the success of any new discovery or invention, science has always insisted that unless it fits a known theory, it doesn't work, even if it does! Given the condition of our planet, it's time for change.

The full size brass magnet rings shown in Figure 19 have slots which are curved on four corners. This is the shape of the magnet when wrapped around with .032 metal wire. It is advisable not to curve the wire around the magnet in too tight a wire wrapping pattern. The size of each slot as shown will accommodate the wire wrapping and fit a layer of .015 mica. The wire should be layered to fit flush with the ends of the permanent magnets.

This wire wrapping of the magnet helped to dictate a method for assembly of the magnet rings, which is to bond the top and bottom of each magnet into slots machined to accept them in an upper and lower brass ring.

Here we will observe the Connections for the Connective Distributors. In order for the wire coils to perform their tasks of assisting in the release of the plastic magnets they need to be interconnected. The connection used is to allow like poles to attract by connecting the north side of one coil to the north side of the other and the south side of one coil to the south side of the other.

Viewing Figure 20 shows magnet #1 which has a continuous wrap of #20 clean metal wire and a total of twenty-one turns going from the bottom of the magnet to where it is flush with the top of the magnet. The end of the wire wrap on the top of #1 goes to the top wire of magnet #44. The bottom of this wire wrap has the wire going to the bottom wire of magnet #2. These wires are twisted together but do not contact the brass holding plate because shrink insulation tubing is slid over the connection preventing grounding of the wire circuit. And this is the procedure. This connection pattern is repeated, which shows the top of wire wrap #2 going to the top of #3 and so forth and so on. All forty-four wire coils are connected in the same pattern. The upper and lower magnet rings are also both connected in this manner. It is very important that the wires do not discharge their magnetic pulse into the brass holding frame, therefore, .015 Mica insulation is bonded around each wire wrap before it is bonded into the brass holding ring. Around each magnet is an insulation jacket of .010 thick Mylar bonded to the magnet before it is inserted into the wire coil. Using this insulation and connection method there are no breaks in the magnetic circuit of the wire.

Now viewing Figure 21, looking down from the top, we see that there are no magnets directly in line with each other and no magnetic activity in the form of a pulse is yet taking place. Notice the 24 dotted rectangular shapes. These are stacks of plastic magnets that are caused to come between the upper and lower magnets. Because there are only 22 magnets in each row, and 24 stacks of plastic magnets, all of the plastic magnets do not arrive directly between an upper and lower magnet at the same time.

When a stack of plastic magnets does get properly located between an upper and lower magnet, the stack becomes a conduit that completes a magnetic pulse between this upper and lower magnet. One must observe and take note that the 182 pulses are achieved with 88 magnets as they interact in two different directions in a simultaneous manner and so without the plastic magnet material no magnetic action would take place. The stack of plastic magnets located in each coil join their power to form one attract magnet to both permanent magnets, thus creating a pulling effect to this moveable magnet of turning the Armature. The intensity of the pull is not the result of the strength of the plastic magnets but results from an attract field set—up between and by the permanent magnets that are impregnating the plastic. Since this new field is set—up by the permanent magnets, this same field is also transferred after the plastic magnets move to a location just past the original attract zone. Here is where the polarity of magnetism is reversed as it stabilizes and two like poles rather than like and opposite poles create reverse magnetism, which is simply reversed magnetic energy.

One must consider a discovery that has not been explored, that magnetism is a constant, we repeat, magnetism is a constant and so molecular changes as they are created are being utilized from what has been thought to be annihilated within the earth’s atmosphere. Now let us observe the Armature. As the Armature turns between these two rings of magnets, the arrangement of magnetic forces manifest themselves, which then cause continuous armature rotation. No direct confrontation takes place between these two sets of magnets without the armature material, which is the vital source that completes the magnetic circuit.

At the present time, scientists have limited the state of the art of harnessing magnetism because they believe and teach that magnetism cannot be insulated and therefore its use is limited to their form of magnetic embodiment. Their teaching then would contradict what is next being explained. That is not to say that what is being explained is not factual.

Difficulty in viewing magnetism as a constant exists because magnetism has at times been harnessed in a confined manner (one that shuts off the flow), which then dissipates it. If magnetism is harnessed so as to allow an unobstructed flow, as for example in this Transmuter, it retains its constancy. The flow of the magnetic field, in order to contact the magnets, must be in relationship to the atmosphere. In that magnetism is a constant, it also has a draw factor. In other words the magnetic field makes contact with the magnets through that particular molecular structure that is magnetized in the atmosphere. It is important to note therefore that while everything is made of molecular structures, not all of them are magnetized. There are many conditions that influence this draw factor, and when they are all recorded and given proper consideration, scientists will understand why they had wrongfully supposed magnetism is not constant in its energy flow. The pulse that is being described which travels from one magnet to another in the existing field is not an electromagnetic pulse but a magnetic pulse, and there is a difference. An analogy that would be helpful is the color spectrum whereby we see basic colors combined to form new colors, and so it is with magnetism, as new magnetic structures form to create varying magnetic fields.

However, there are basic differences between all magnetism: A) the particular composition, B) their magnetic intensity, and C) their pulse rate. If all or only one change takes place, the polarity is affected. For example, there are magnetisms in the atmosphere only minutely touched which will show that structural polarities exist in all things and in all differing measures. Two simple tests that arc useful in understanding these magnetisms are: 1) If a permanent magnet had a steel ball attached to it, the ball can be pulled free of the magnet by first contacting the ball with an unmagnetized piece of iron and then by pulling on the iron, the ball leaves the magnet, sticking to the iron. For a very short space of time the ball can be viewed as still sticking to the metal, after the metal magnet is removed even a goodly distance from the permanent magnet. Where did the magnetic power come from? We know the magnet transferred its power to the iron through the ball. Is the magnet now possessing a weaker strength?

Another example. If a mechanical device repeated this motion several million times would the magnet be drained in a day or so? No, because magnetism is a constant. The transference of magnetism from the magnet to the metal does not mean a loss of magnetism in the magnet. It has to do with the molecular structure of all elements. The reason the ball stays with the iron is that there is an additional structure in the iron that is also in the ball, producing an attracting force of likes. The reason it does not maintain the hold system is that their magnetic structure, that is the ball and the iron, are incomplete without the additional molecular structures in the magnet which is the strength needed to complete the field.

The second example we need to take a closer look at is the magnetic conduit. Hold a permanent magnet in the left hand facing the north face to the right hand. In the right hand have a .030 thick plastic magnet measuring the same height as the permanent magnet. If the opposite polarity of the plastic magnet is offered to the permanent magnet, they understandably attract together. If the like face is offered, repel happens. If an edge of this .030 thick plastic magnet is offered, it will not attract to the center of the permanent magnet. It will always attract to one side of the north face or the other depending on the polarities' edge of the plastic magnet and which way it is facing. After establishing to which side this thin magnet moves on attract, move this same edge of the plastic magnet to the other side of the same north face.

Notice that the permanent magnet simply attracts this thin magnet back to the other edge and then stops there on attract. If this north face of the permanent magnet simply attracted it to the center of its face, this entire generating principle would not work. As more plastic magnets are added to the stack, the total thickness of all the stacks move past the north face and stop at the same attract edge as if only one .030 plastic magnet was used. The reason this attract edge of the permanent magnet does not simply attract to the center of the plastic magnet stack, which would be a logical assumption, is that the magnet attract pulse starts at the closest plastic magnet but then travels through the first plastic magnet, then attracts the second plastic magnet, moving at light speed and then on and through the third plastic magnet and so on until it arrives at the final magnet.

When the circuit of all the plastic magnets is completed, the total attract power is focused into the very last plastic magnet. This same magnetic circuit increasing attract from layer to layer will one day possibly be accomplished with a diamond crystal magnet. However, for the time being this Transmuter will attain the necessary magnetic response by using stacked plastic magnets. This movement then of 3/8 inch, which is the total thickness of the amount of the plastic magnets used represents five degrees of travel to the Armature. Please note, it represents five degrees of travel to the Armature. Notice that the magnets used also have a 3/8-inch face. Since there are 22 magnets around each ring, the Armature has 110 degrees of pulling movement from one magnet ring. Also notice that the placement of the opposite magnet ring is located as centered as shown in Figure 21.

This then allows the opposite ring to pull another 110 degrees for a total travel distance of 220 degrees.

Explaining the driving attract force in this manner is helpful because it addresses the next problem as we bring it to mind. The obvious problem is how did the plastic magnet stacks get free of the attract after the movement took place.

Before stating how it got free, it is important to note just what was being attracted that needed release action. The attract pull to the plastic magnets was a pull to a south pole set—up by the two north magnets. The strength of this south pole is not a built in part of the plastic magnet structure, but is the power of the permanent magnets relocating inside the plastic magnets. Now if you will remember the test where the power from the permanent magnets transferred to the piece of iron you will understand it more. This same condition happens to this Armature only in a circular motion. Do you have it! Assuming you are clear on this point, let's go on, and if you're not, then retrace what it is you need to know, so you can have a clear understanding of what is going to be said next.

Notice in Figure 21 that the dotted line which represents the plastic magnets, which are at a certain point on the inner magnet row. Here these plastic magnets are under attract influence from the next set of permanent magnets before the actual hold—back can manifest itself. This holdback is prevented because a generating force moves into a position of release before the holding occurs.

The magnets that have pulled the plastic magnets for their five degrees of travel simply turn it free because arriving from the same direction is another plastic magnet and this power of attract switches to the new arriving stack. The switching of attract from one stack of plastic magnets to the next is an extremely important action, therefore some reasons for this polarity switching are explained. Within the framework of an ordinary magnet attracting any object, an amount of energy would be required that is equal to the attract pull in order to pull the material free. A strong focus must be put on what is actually being attracted. The charged particles relocated and stored within the plastic magnets possess a high potential for being moved out by virtue of the fact that they do not belong there. For this reason a charge of like strength is not necessary to affect a plastic magnet polarity change which causes the attract—release action. The generating force which moves into the position of release is partially supplied by the metal wires wrapped around each permanent magnet. These wires serve as connective distributors which distribute a charge that momentarily takes over the attract pull for the permanent magnet as the plastic magnets go on past. The permanent magnet then instantly redirects its attract to the next arriving plastic magnet stack. We therefore see an equal amount of strength is not necessary to break free of the initial attract pull.

Viewing this action in Figure 21 therefore shows the importance of the relationship between the permanent magnet’s size and the plastic magnet’s size as they are mounted. The only way north to north magnets could be used on attract is to have them be mounted side by side as shown. Each magnet has its section of plastic magnets to impregnate, located inside each coil where it can transfer its power in an opposite polarity for attracting.

Before explaining the magnetic pulse sequence it is worthwhile to identify some of the varying degrees of magnetism that are manifest inside this Transmuter. There are unending variations that are being manifest, all of which serve a useful function. For example, the plastic magnets actually accept a different kind of magnetic charge than the permanent magnet, which is one kind of polarity. The air space around each permanent magnet is as important as the magnet itself. Therefore, the invasion of this space by the metal wire jacket causes another variation of magnetism that is manifesting as a conductive/distributor. Also the particles formed inside the Transmuter form still another variation of magnetism. As this form of magnetism joins the pulsed sequence of the permanent magnets, the power joins with other magnetisms.

As current is drawn out of the coils, another variation of magnetism manifests itself around the copper wires. And the list goes on. The word magnetism therefore has a limited meaning, because the word needed should be descriptive of a total variety of like energies not heretofore identified.

The actual power removed from this Transmuter can be compared in strength to 7,200 watts of power at 900 volts. This power however is not the same kind of electron flow as happens when a generator is driven. This power is magnetic energy and when it is fed into new magnetically driven appliances, working on its own principles, it will seem to do the same electrical work. Therefore persons will view it as being the same, when in fact it is different.

Explaining the pulse sequence. There is much to say concerning the magnetic pulse sequence, so let us begin here. The magnetic pulse sequence that occurs within the framework of the coils has a very definite purpose. It has to do with the amount of driving power achieved and it is therefore important to review how this magnetic pulse sequence takes place. In Figure 21 we see magnet #1 located on the upper magnet ring impregnating plastic magnet stack A, also impregnating stack A is magnet #45 located in the lower magnet ring. The polarity of he plastic magnets is such that these two permanent magnets are both attracting plastic magnet stack A causing the Armature to move in the direction of the arrow. This attract movement will not stop until the total amount of the plastic magnets in stack A has moved past as shown in Figure 22. This attract did not begin when stack A arrived as shown. It began when a lesser percentage of the stack was moved into this position. For explanation purposes, let’s assume that the magnetic pulse happened when this perfect alignment transpired.

Pulsing then started at magnet #1 on the top level and pulsed through stack A to magnet #45 on the bottom level inside. This pulse now being located under the bottom ring on the inside row is looking for the next pulse point. The next pulse happens by the magnetic circuit jumping four magnets counter-clockwise or the direction of rotation to magnet #15 on the bottom outside row.

Since the pulses are slower than the Armature speed, plastic magnet stack U will be in position before the pulse gets there. Note there are 182 pulses per every five seconds and it is only slightly more than two pulses per revolution. To explain, 900 revolutions per minute are fifteen turns around per second or seventy-five turns around during the five seconds, the pulse time of 182 pulses.

In attempting to explain this magnetic pulse in terms of similar electric motor technology the obvious thought would be to relate this action to cycles per second, as for example, sixty cycles per second is power feeding the normal household. This however is completely wrong, because magnetisms travel at the speed of light and these pulses are simply the difference of light speeds to each other. Magnet #50 on the bottom pulses to magnet #6 on the top through stack B.

This pulse sequence continues until all eighty-eight magnets have pulsed before magnet #1 is again repulsed. We see therefore how the pulsed speed is controlled by the revolutions of the Armature. Each time this magnetic pulse happens through these plastic magnets, a charge of particles sends a heavy attract force that intensifies the attract pull which becomes the main driving force that turns the Transmuter Armature. The copper coils however are accomplishing several important tasks while the plastic magnets drive the Armature. The coil connections which group the
twenty—four coils into eight groups serve as rotating magnet poles which are being self-induced, thereby resisting acceleration beyond the 900 r.p.m. allowed speed. As the magnetic attract happens between the permanent magnets and the plastic magnets, and this magnetic field is released, the coils of copper wire build up a charge which in turn give a slight rise and fall action to the armature plate.

This movement then generates particles which are gathered and removed as magnetic current by the brushes. Plastic magnets that are not used during the heavy pulsing are still attracting but they are discharging and picking up slower. As the pulse goes around it gets stronger because the accumulated magnetic power of all eighty-eight magnets is added to the pulse volume.

During the start—up phase this pulse happens only by the power of these permanent magnets located inside the unit, and the pulse is transmitted through particles by the chimney structure that is a channel that amplifies the above ground particles. The pulse also is transmitted into the ground through the shaft which generates a particle flow which in turn sends particles back into the Transmuter that interact with existing particles and thus produces a flowing magnetic current drawn from the magnetic field.

This then magnifies the pulse leaving the Transmuter and a speed—up of particle intensity begins to happen. This acceleration of the nuclear subatomic parts has a bombastic effect and creates a structure of mobility for other structures forming a molecular breakdown from structure to structure whereby they are contained and utilized once this harnessing takes place. It would serve you well to review the last statement made in order to assess what is happening in the correct manner.

The nuclear energy released through this method of acceleration is therefore accomplished within the confines of the structural balance, and this radical change to these elements produces a captivity of power which is a constant flow of ions through the conductive use of neutrons. A reserve build—up of magnetism is needed at the copper screen inside the unit because the particles drawn in that are changed to magnetism only desire to join the magnetic pulse flow to which they are attracted. In order to control the volume of particles which should be allowed in the stream, flow control parts called stop gauges are used. These items shown in Figure 17 are driven when the flow of magnetism in the pulse circuit needs to be cut back. When the stop gauges rotate they redirect the magnetic flow by sending the particles into other locations inside the unit. The three brass .015 metal wedges on each stop gauge also catch and store particles similar to capacitor build—up. M Magnetic particles are then discharged into the stream when the stop gauges slow down.

Stop gauges stop the particles from joining the magnetic current flow in a quantity beyond the needed amount. However, they for the most part only redirect the particles and do not stop them or change their speed. When the unit is completely charged up, the armature is then driven at full speed because of a charge build-up in the magnets which are a central location for the magnetic pull.

Without drawing magnetic current out of the unit the only condition that could cause a slowdown of the armature is if the pulse rate were to slightly diminish. This does not happen because the stationary rotary bars continuously feed the magnetic field in the armature preventing a slowdown of the pulse rate which then maintains the full armature speed. When current is drawn out of the coils many actions take place that help to maintain armature speed. Putting a load on the armature coils does cause it to slow down to its allowed slower speed. However this slowing starts up the lower magnetic dispenser. This dispenser then turns sixteen 1/8 inch thick copper stranded wires which create a particle movement that saturates the magnetic pulse circuit thereby recharging it and adding more power to the plastic magnets.

Comparing the construction between the stationary rotary bars and the sixteen copper wire ropes, one would think that the function of each is completely different. The magnetic dispenser however, is equal to the rotary bars in performance in that they both do the same basic job of pushing particles in the needed direction. It also fans particles toward the stationary bars causing them to speed up. Another action it does is to pump unwanted particles out of the six-inch chimney. The stop gauges also start-up again and interfere with the load being drawn by the pulsed generating force which is entering the coils, thereby momentarily removing the load from the armature.

All this action then allows the Armature to again speed—up. The increased armature speed raises the weights which disconnects the lower drive units and again allows the magnetic build—up to enter the pulsed magnetic stream to build—up again, slows the armature and the weights lower, starting up the stop gauges which again reduces the load. This process continues and therefore we see that the normal running unit is a build-up and a slow—down. This causes the unit to have the sound of a skipping rope, so to speak, during the normal running operation.

Because of this continuous speed flow adjustment it can therefore be stated that the ratio of the revolutions to the speed of the generating force needs to continuously compensate to attain a smooth generated flow of power. We repeat, because of this continuous speed flow adjustment it can therefore be stated that the ratio of revolutions to the speed of the generating force needs to continuously compensate to attain a smooth generated flow of power.

This continuous compensation becomes possible because of the speed selection. When the unit's speed is geared down as disclosed, there are less capacitors needed. North to north creates this effect. Therefore polarity is affected and the desired effect is achieved. As differing Transmuter designs are contemplated, we need to review the impact that speed will have as we think on capacitation and its effect on not only the individual parts but the whole Transmuter action. The volume of this newly produced generated power is directly related to two factors. First, the total power of magnetic power released when all the magnets are pulsed in sequence is multiplied times the exchange of particles entering and leaving the Transmuter, and secondly since there is an unlimited supply of particles to draw on, the volume of energy produced is only limited to whatever strength people can increase the power of the same pulse sequence and of course increase the hardware as needed.

We will now begin an explanation concerning the Armature Construction.

The conductive materials that comprise the armature housing is of the greatest importance when analyzing the volume of magnetic energy produced by this Transmuter. This material is custom made from a blend of known metals and has a molecular structure ideally suited for particle absorption. Particles drawn up out of the ground enter into the center post, travel through this metal enroute to the generating coils. This metal therefore, while being nonmagnetic, which means a permanent magnet will not adhere to it, is most certainly magnetic when viewed from a power generating standpoint. Whenever any metal is caused to be moved through magnetic fields, the normal response it produces is that it sets up magnetic currents that are unwanted, for example, eddy currents, which happen in standard generating housings.

These problems are somewhat alleviated in standard generators by using a laminated iron core to dissipate the eddy currents.

In this unit however these magnetic currents are not only helpful but necessary because of the particle activity they produce to help generate a magnetic flow of power. This all becomes possible because of the molecular structure of the metal used which has a trade name of TiAlCo-B. In a normal generating armature, the same metal that surrounds the coil also is used as the core of the coil. In this unit, the core as stated previously becomes the driving force to turn the armature, and this material is made up of plastic magnets.

ARMATURE ASSEMBLY

Viewing Figure 25 we see Part #44 Armature Plate Assembly of TiAlCo—B. This metal plate is 3/8 inch thick and twelve inches in diameter. The armature is then assembled using this base frame.
Viewing Figure 25 shows Part #44 with twenty-four slots milled in the armature plate. The reason for selecting twenty-four slots is that the needed speed is 900 r.p.m. An eight-pole magnetic field must be connected to accomplish this speed. Therefore a coil number divisible by eight was desired. The size of the slot was made as large as possible without running a risk of cutting the web between the coils too thin. This web now measures .135 at its thinnest point.

Part #46 is inserted first, which is a graphite liner for each slot. This liner is only 1/16 inch thick and secured by bonding into the slot with nonmagnetic glue. It extends from the top to the bottom of the plate. This material serves a two-fold purpose. First, it screens out air particles that would attempt to get into the coil by passing through the metal and insulation. Second, it serves as a monitoring filter to collect and store particles, slowing them down, then allowing them to flow evenly into the cell.

Part #47 are insulated slot liners made of .010 thick mylar high voltage insulation. This high quality liner is needed to prevent sparking to ground because of the 900 volts being generated. The insulation material is extended 1/8 inch beyond the plate on both top and bottom of the plate.

Part #48 are twenty—four coils of copper wire with plastic coat insulation. The coils consist of twenty-two turns of #18 wire in three layers. The first layer having eight turns, the second layer — seven turns, and the third layer having seven turns. Care must be taken to not wind the coils too tightly or it will affect the tension of the generating parts, and this point is very important. One coil wire exits at the top of the plate and one at the bottom of the plate in order to connect the coils in a smooth flat connection pattern. The wires have insulating tubing over them before leaving the slot.

Since these coils are not wound around a center laminated iron frame which would become a natural holding method, the coils need special attention when being secured into the slot. The core size of the coils must be preserved in full dimension when pushing the coils into the cavity for bonding. A teflon tool that is the same size as the coil orifice or 3/8 inch by 2 inches is first inserted into the coil. Next the coil of wire is completely coated with a five-minute epoxy glue of a nonmetallic nature and the coil gently forced into the insulated slot. Care is taken to center the coil between the mylar 1/8-inch extensions on each side which is for the prevention of grounding the coil. After the coil is firmly bonded into the slot, the teflon tool is removed and the cavity for the plastic magnets are ready for magnet insertion. Pre—marked stacks of plastic magnets should be ready for insertion to prevent inserting the magnets improperly. To make one stack of plastic magnets. first purchase plastic magnet sheets polarized north on one side and south on the other, .030 thick of the best grade possible. Cut twenty-four pieces, each measuring 3/8 inch by 1 inch precisely. Make two separate stacks of 3/8 inch by 1 inch noting that the individual magnets are not to be glued together when inserting into the coil orifice which is 3/8 inch thick by 2 inches long.

Prior to inserting the magnets #50 into the coil, place the brass clip #51 which is 1/4 inch wide, 1—1/2 inches long by .012 thick across the coil, making sure to center it. Now, secure it by bending 3/4 inch across the coil and 3/8 inch on either side in a downward position. I repeat, now, secure it by bending 3/4 inch across the coil and 3/8 inch on either side in a downward position.

Insert and glue between graphite and mylar insulation. Make sure the mylar insulation is also under the clip which prevents grounding the coil. All this must be done before inserting the coils in the plate. After the coils with clips are securely inserted into the plate, turn the plate upside down and insert magnets by gluing directly to copper coils.

Part #49 represents twenty-four 1/8-inch holes needed to bring each coil wire from the bottom of the plate to the top of the plate. This wire spacing results in an orderly method for arranging the coil connections. After the wires are soldered to the commutator using care not to use magnetic solder, insulation plate #53 is secured to the armature top to firmly hold the winding connections and to prevent vibration of the wires.

Let us now concern ourselves with the Armature Connection. The particular connections used between the armature coils and the coils to the commutator are such that the necessary random charging of the coils takes place without any interference. Viewing Figure #25 we see the twenty four coils grouped into eight groups of three coils per group. Notice coil #1 is a center coil of the group. This coil is aligned as the coil centered to the mica insulation that is between commutator bar #1 and commutator bar #32.

Notice the S—1 wire from the coil goes to the S—24 wire of the coil located on the right and the F—l wire goes to the F—2 wire of the coil to the left. The F—24 wire
goes to the commutator bar #1 and the F—2 wire goes to the commutator bar #32.

When these wires cross as shown they are insulated and do not make contact. Notice bar #1 has a jumper wire to bar #2 and bar #32 has a jumper wire to bar #31. It would be wisdom to review what has just been said so that you might retain as we go on with further explanation. These jumper wires are 102 simply to use a standard 32-bar commutator instead of the needed sixteen-bar commutator which is not a standard purchased item. The jumpers therefore change the 32 bars into a sixteen bar commutator. As this group of coils turns counter—clockwise the first brush removal location will be two and one—half bars counter—clockwise shown as a dotted rectangle. When the armature turns counter—clockwise, commutator bar #31 contacts this brush.

Notice bar #30 will also be under the same brush when the contact takes place. If the coil group of #1, 2 and 24 has a random charge heavier than coil group 21, 22 and 23, the power will transfer at this brush contact to not only flow out of the unit at the brush but somewhat balance into the group having the lesser charge thus preventing the random charging from being a flow control problem. This wire crossing connection serves two important needs. First, it brings the proper polarities under the brush preventing sparking, and secondly, it assists in switching coil polarities. When commutator bars 32 and 1 come under this same brush the brush will momentarily
cause a closed circuit to take place, because the brush will serve as a contact short circuit for just the travel distance of one—half the width of the brush.

This action then causes an induction charge to momentarily build-up in this group which is similar to a bar wound rotor, thus momentarily giving a driving kick to the armature plate. As soon as bar 32 advances past this brush and only bar 1 is under the brush, this coil group again becomes a source of generated power by having current flow out of the coils through the brush. There are eight separate locations where the current flow is reversed. If eight brush stations were used, the speed would be for an eight pole or less than 900 r.p.m., and that is important to note. There are however only six brush stations and the pulse of eight polarity reversals happening simultaneously are impossible since the brushes trigger the pulse. The r.p.m. therefore is controlled by the six allowed pulses per revolution or somewhat the speed of a six pole and an eight pole unit combined which is slightly over 900 r.p.m.

A comment about the statement of random energy charge should be made. The even flow of energy leaving the Transmuter would tend to show the energy being produced is flowing evenly and therefore this unit does not produce random bursts of power. The energy here is called random energy only because the coils' charging sequence is not a one—two—three confined pattern, but a selection of coil charges that pulse in a pattern as needed while repeating in a random sequence.

We will now take a look at the commutator jumpers that balance a random charge. The jumper wires previously mentioned, which convert a thirty—two bar commutator to sixteen bars will not be needed when sixteen bar units are ordered. However, jumper wires are needed to complete circuits between groups of coils which will allow the generated power to be removed from the six brushes without any single brush at any given time carrying more than any other brush no mater what coil groups are generating at any given time. There are eight jumper wires required and they all connect to only the finish point wires from all eight groups. The first jumper wires go from bar #2 to bar #10. Notice the connection skips three sets of bars. The bar selection of #2 and #10 is made because these bars already have one wire secured to each which allows the jumper wires to fit the commutator slot without the need to compact four wires into one slot. This condition would have been the case if bars #1 and #9 were selected which would accomplish the same jumpering results. The next jumpered bars are bar #10 to #18 and then #18 to #26 and then #26 back to the start bar #2. This completes a set of four groups. The next set of groups are #30 to #6, #6 to #14, #14 to #22, then #22 back to start #30. Notice these two sets of four groups each are not joined by jumpers. If they were, then the pulse would always be an eight pole. Using this jumper arrangement, the brushes trigger six poles, then the connection arrangement slows the speed increase by pulsing the induction of eight coils per group to prevent the acceleration to a six pole speed. The constant speed adjustment results causing the needed 910 r.p.m.

ARMATURE PLATE MOUNTING

Earlier in this disclosure a statement was made that the magnetic charge is built up in the armature coils and gives a slight rise and fall movement to the armature plate. This magnetic action is caused in part by the continuous speed adjustment between the six and eight pole speed changing as was outlined during the armature connection disclosure. This up and down movement of the armature plate is magnified by the manner in which the armature plate is secured to the armature hub.

Located on the top of the armature hub, on one side only, is a piece of nonmetallic shim stock #45. When installed, this shim stock will cause the outer rim of the armature plate to measure .110 higher angle than is normal. As the armature rotates, this higher side goes around with the corresponding low side, 180 degrees away, thus giving the impression of a thicker armature plate when rotating at 900 r.p.m. This vibrating movement to the Armature plate serves several important functions. It assists in the attract/release magnetic activity between the plastic and permanent magnets. It also helps the armature coils to retain and release the needed magnetism. There is also a needed movement that takes place which helps the unit maintain the ratio of revolutions to the speed of the generating force by causing the weights to respond quickly to the centrifugal force. As the armature plate takes its course of action, note that it is firm]y bolted to the armature hub which carries the weights around. A sleeve bearing in this hub gives it some lateral free movement of as it rotates. This course of action of the armature plate is somewhat transferred to the hub and weight assembly which necessitates a strong focus when reading the disclosure on the lower drive
connector assembly which follows.

CONSTRUCTION OF THE CENTRIFUGAL FORCE CONNECTOR ASSEMBLY

As we have seen there is a need for the ratio of the revolution to continuously compensate to the speed of the generating force. Let us review the mechanical device which accomplishes this.

Notice in Figure 23 that weights raise and lower by centrifugal force which starts and stops the lower drive assembly. Standard electric motors use centrifugal force to connect and disconnect the start windings by raising and lowering weights which gently make and break electrical contacts. There is a vast difference between the workings of a standard motor and this Transmuter and so there is also a vast difference between this gentle touching of contacts and the sharp power push which is needed to drive the weights into the graphite packing to turn the lower gear structure.

Also this power push has to be accomplished within a diminished amount of speed change because of the close proximity between the high and low speed requirements to the armature.

This connector design is now explained in greater detail. Weights have weight and to attain the necessary contact which would cause this lower graphite bowl to turn by using heavier weights

would merely serve to add an unwanted load to the Armature. The object is to attain a maximum amount of a sharp downward action with a minimum amount of ounces to each weight. This action is accomplished first of all by allowing the weights free travel before being constricted by a flat spring attached to each weight. The up and down vibration to the armature hub caused by a specific
mounting procedure produces a balance in the weight so as to modulate the action. The governing factor then becomes an increase or decrease of r.p.m. within the allowed speed limits of the armature. Notice the mounting procedure holding the flat springs. See Figure 23.

Each spring is bolted to the lead edge of each weight. The spring has its tail section free to slide approximately 1/8 inch up and down in a slot out in the bottom of the armature hub. Because of the mounting position of the spring, when centrifugal force causes weights to raise up, the upward travel of the weight is not restricted to a need of immediately bending the flat spring. The back of the spring moves backwards allowing the weight to rise. This free movement then gives the weight a mechanical advantage of weight in movement before it needs to bend the spring. When the spring bends, the pin secured to the spring contacts the weight. This causes a downward push that will be manifest the instant centrifugal force is lessened by a drop in r.p.m.'s. This method of storing downward power capitalizes on free travel of the weight which bent the spring and transferred the spring's energy into a leverage contact point on the weight as shown in Figure #23. It is important to note that the downward push to weight will cause weight to hit graphite with some force. Note that as speed increases a bending of springs occurs. This spring bending action is controlled not just by allowed r.p.m., but according to tension of springs. The contact between the weight and the graphite does not produce and has no need of a firm holding action.

When the Transmuter is operating under full load, the lower unit never completely stops and the sharp downward contact to graphite gives all the driving power needed to keep proper turning speed for the lower wire ropes and stop gauges. There are 6 weights, each weighing 1—5/8 ounces.

This total weight when added to the six springs which have a bending force of approximately 14 ounces each, accumulates to the necessary force for contacting the graphite which then drives the lower unit.

OUTER ALUMINUM WALL

The outer Aluminum Wall, Part #2, as disclosed previously is an outer housing, 8 inches high and 15 and 3/8 inches in diameter. This part is made of .030 thick aluminum and is rolled and fitted as shown. This part however is not totally adequate at this point to change the particle activity which takes place within the Transmuter wall.

It is necessary to coat the outside of this part with TiAlCo—B metal in order to achieve this. Let's discuss the purpose of the coating. The bombastic activity that takes place within the main Transmuter housing does not complete the magnetic activity being generated. A second area where particle exchange takes place is within the wall area between the inner wall and the outer wall. The outer wall #2 is coated on the outside surface with TiAlCo—B metal, which absorbs and utilizes the particles to create a thermos bottle effect to the inner Transmuter preventing any unwanted particle escape.

TiAlCo—B metal used welcomes magnetism, thus this wall begins to absorb particles and utilizes them as a magnetic force field. Particles enter the air space between the inner and outer wall from a slot cut in the nine inch chimney frame and travel in a counter clockwise direction (looking at it from the top), and then enter the main Transmuter body through a similar slot cut approximately 180 degrees away on the opposite side of the same nine inch chimney frame. The particles enter the
nine-inch chimney, are then siphoned into this slot, and circulate between the walls.

They are exchanged with particles already in this area, that entered this same space by coming through the inner wall and from the top in that the plexiglass ring does not hinder the entrance of particles.

When these particles enter the Transmuter through the opposite slot, as they join in the magnetic pulse stream, they serve to produce a stronger magnetic pulse. The outer wall builds an attract field which completes a magnetic pole. Without coating this outer wall the magnetic pale circuit would be incomplete and the Transmuter would not function.

BRASS PARTICLE DISTRIBUTOR

The pressure that is built—up inside the Transmuter is a necessary one, and is controlled by a brass fitting that is called a particle equalizer which is mounted inside on the center post.

This fitting Part #58 is located not closer than two inches from the under side of the TiAlCo—B dome. This distance allows the particles to maintain a flow without the hazard of an over production of particles which would then create an unwanted heat factor.

FINAL ITEMS NEEDING COMMENTS BEFORE START-UP

The 22-inch brass rain cover above the chimney should be finished to a dull brush finish and not be reflective. The dome on the Transmuter should also have a dull brush finish. The brass extension ring Part #6 should be knurled on the inside surface with the same knurling finish as Part #1.

CLEANING BRUSH

There is a carbon brush mounted to where it contacts the outer rim of the armature plate and constantly removes particles that are then put to good use. These particles travel from this brush through a coaxial cable and are fed into the magnetic current driven motors. This cleaning brush has an insulated jacket to prevent the charge from going into wall #1 which holds the brush.

The cleaning brush (Part #61) has a coaxial cable attached to it and this brush must be connected with a coaxial cable to a brush that is in contact with the TiAlCo—B rotor that is magnetically driven. The coaxial cable’s metal must be connected with a flexible metal line directly into the brush itself. The unit is now ready for start-up.

TRANSMUTER START-UP PROCEDURE

Reviewing Figure 16 which shows a full size side view of the unit, notice that part #29 is a short shaft with a bored splined hole slightly protruding out the bottom of the Transmuter. A mating splined tool is inserted into this hole for driving purposes. After start—up this tool is pulled free allowing the unit to run on its own power. The starting procedure is as follows: The unit is geared to 300 r.p.m. and allowed to build-up the needed molecules for approximately 10 to 20 minutes. The determined time will be established by a sound change that occurs as the molecules begin to line up. After turning the unit for approximately 10 to 20 minutes, the build—up of the molecules has a contact point in a copper screen, .040 thick, 12 inches in diameter, which is insulated from the bottom plate with .030 Mica insulation, which prevents the built—up magnetism from being dissipated. The speed is now slowly increased to 600 r.p.m. and is maintained for approximately 12 to 20 minutes. The molecule build-up is now beginning to flow toward the inner wall but not lost because of the TiAlCo-B coating on the outer wall.

Finally, the unit is driven to its final speed increment of 910 r.p.m. Running at this speed the stop gauges are not driven because the weights are moved upward. This achieves the full pulse rate of 182 pulses per 4.8 to 5.0 seconds. The particles arc now being drawn in at a full rate which introduces a bombastic effect which in turn creates another, and another and so on. The Transmuter will now run with the power of its own magnetic energy allowing the start—up tool to be removed.

When the unit is running, the generated power will leave the Transmuter through six coaxial cables, one from each brush station, which is the way the power is transmuted for use. The reason for the use of coaxial cables as opposed to standard motor lead wire is because the energy being removed is magnetic energy and it therefore will not grab a standard motor insulated wire.

Because we are limited by statements and phraseology that have always been applied to electrical generators, we use the same here as an expedient. This limitation has stopped knowledge of the full potential of magnetic current. For example, the armature was insulated for 900 volts. The insulation used should be measured as though it were going to be insulated for what we know as 900 volts. This is the ideal spacing, but no volts will be registered. Because no volts will be evident at the brushes there is no line pressure to force the magnetic energy out of the Transmuter. The energy being generated is neutral magnetic energy and the only way it leaves the Transmuter is by being offered a set polarity. The stronger the attract force being offered the greater will be the flow of neutral magnetic current leaving the Transmuter.

We see therefore that there is no reverse flow as in a standard generator and the switching of polarities must be accomplished within the magnetic motor itself. The neutral flowing magnetic current does not manifest as a magnetic force field until it is forced to jump an air gap en route to the attract field. An important benefit to this method of energy removal is that the earth or ground is not an attract field, and the motors using this new energy do not need insulation to prevent grounding. Under full load, this unit as disclosed will produce the equivalent of 7200 watts of continuous power. Motors being driven by this magnetic flowing current need no copper coils to build-up electromagnetic fields because this flowing current turns into varying magnetic fields by simply giving this energy a place to manifest as a giant magnet. The metal TiAlCo—

B, is ideal for this purpose because it welcomes magnetism. The main principle therefore of new motors using magnetic current is to capitalize on magnetic energy directly.

The working process of the machine is based upon a nuclear reaction taking place between differing molecules. When arranged and rearranged they produce a system that works in a compatible formula with the design of magnetic energy of the earth's atmosphere which extends to and including the rim that encompasses the earth. All things working together create a harmonious flow of magnetism heretofore untapped. The acceleration of the nuclear subatomic parts creates a structure of mobility for other structures whereby they can be contained and utilized once they are harnessed in a proper manner. Thereby we see that nuclear energy has a structural balance. The magnetic field is not unlike this same structure. For years scientists have thought that to harness magnetism, magnetic embodiment in a particular element was necessary, but time will soon show that there are magnetisms in the atmosphere that have only been minutely touched. It is not the creative force of the universe that is lacking, but our limited knowledge that has yet to further this science. So it is that structural polarities exist in all things and in all differing measures. Concerning metals, this is one of the reasons why when they melt, some adhere and others escape but still add to the final product which thus creates varying degrees of tensil strength. It is not so much the purity level that strengthens but the manner in which things are melted in order of chemical importance and degrees.

TiAlCo-B metal utilizes these principles and more as you'll see when you learn more about it.

The Particle Transmuter will lead to discoveries and developments that even science fiction has yet to explore.

6.1.1.3. Magnetic Motor

- Unit produces 10 HP
- Runs on magnetic current provided by the Particle Transmuter
- Capable of being constructed in various sizes for greater output
- Suggested use: household and industrial, example - this motor can drive the fan
- required for the Magnetic Heating Unit
- requires special alloy
- Requires mechanical startup

This motor is a magnetic device that incorporates the use of rotors to generate physical power, which is another form of magnetic energy. This unit requires an energy supply from its mother unit, the Particle Transmuter. When combined, these two will be used to produce an energy for other mechanisms, such as mechanical appliances.

PRINCIPLE BEHIND THIS NEW ENERGY SOURCE

This motor attracts the flowing magnetic energy from the Transmuter (coming from the coaxial cable) into it's rotor and sets up a response from wing to wing which completes a circuit between two stationary copper rings. In turn this completed circuit becomes the driving force to turn the structure. It is an important fact worth noting that the principle here is to show there relationship between magnetic energy as opposed to electrical current, when captivated in aparticular structure. This energy form will produce the same driving force as electrical current when applied to the proper structure. This opens unlimited possibilities for the manner in which this structure can be used.

This unit does not have the problems typically associated with electrical current, such as overheating, motor weight due to the use of iron, the cost of electricity, the danger of motor fires, etc.
To capitalize on this untapped power source - a motor design is herein used that departs from standard electric motor designs.

LIST OF MOTOR PARTS
#1 - Aluminum Outer Housing
#2 - Hardened Aluminum Front Motor Housing
#3 - Back Motor Housing - hardened aluminum
#4 - Oil Cap and oil saturated cloth
#5 - Brass Motor Shaft
#6 - Collar secured to Shaft #5. This Collar is made with a bolted section on one side to form a groove on the outside rim that supports a cam.
#7 - Disc Brake Material - 1½" O.D., 1" I.D., 3/32 thick, secured to the side of Collar #6.
#8 - Six Trip Cams measuring 13/16" long spaced equally for 360 degrees in two rows, 3/8" apart, center to center, secured onto Shaft #5.
#9 - A stationary 12 position Holding Ring secured to Housing #3 with 12 Holding Grooves consisting of ¼" half circles.108
#10- A Trip Arm activated by each of the six Trip Cams #8
#11 - A Pin that is the pivot point for Trip Arm #10 - nonmetallic
#12 - A Fork Section of Trip Arm #10
#13 - A Frame to support Pin #11 - This frame is supported by Shaft #5 with a flange bearing that allows the shaft to turn inside it. When Trip Arm #10 is forced up, pressure is put on Pin #11 which applies a backward force to a snap ring secured to Shaft #5. Frame #13 is a nonmetallic material.
#14 - Snap Ring mounted in a groove in Shaft #5.
#15 - Outside Cam with six lobes - This Cam has a slot machined through it that allows Arm #10 to pass through it.
#16- Three 3/8" Shafts secured to outside Cam #15. These shafts are equally spaced around 360 degrees.
#17- Three small 3/8" I.D. Compression Springs slid onto Shafts #16
#18 - Cam located on the inside of the Hub having the same pattern of lobes as the outside Cam. This cam is held away from Cam #15 by Compression Springs #17. Shafts #16 have adjusting nuts on the ends to prevent the inside Cam #18 from moving more than .018" away from the Brake Material #7.
#19 - These are four Grooved Slots machined in Cam #18. Three of these slots are 3/8" wide and long enough to allow Cam #18 to advance 30 degrees on Shaft #16 before the Shaft contacts the back of these slots. The larger slot allows cam movement without Arm #10 causing interference.
#20 - Three compression Springs that are mounted inside the trail section of the grooved slots in Cam #18. Before this Cam advances the allowed 30 degrees of forward travel, these three Compression Springs contact the three Shafts #16 and get compressed and then cause the Shafts to also rotate in the same direction and carry Cam #15 with them.

#21 - These are Braces to slideably hold the Cross Bars that carry the moving electrodes. These braces have grooves machined to accommodate two leaf springs, one on each side. These Springs are on the ends of the Cross Bars to constantly force the Cross Bars toward the Shaft #5.
#22 - Top Cross Bar
#23 - Top Cross Bar magnetic storing Material
#24 - Electrode secured to storing Material #23
#25 - Brush to feed power into Material #23
#26 - Line to feed power into Brush #25
#27 - Magnetic Storing Material secured into Top Cross Bar #22
#28 - Electrode secured to Material #27
#29 - Brush to feed power into Storing Material #27
#30 - Line to feed power into Brush #29
#31 - Arm secured to Top Cross Bar #22 which reaches over the top of Cam #15 but does not contact it.
#32 - Cam Follower Bearing that carries Top Cross Bar #22 up and down by contacting Cam #18.
#33 - Bottom Cross Bar
#34 - Magnetic Storing Material secured onto Bottom Cross Bar #33
#36 - Brush to feed power into Material #34
#37 - Power Line to feed Brush #36
#38 - Material to hold magnetic charge
#39 - Electrode secured to Material #38
#40 - Brush to feed power into Material #38
#41 - Line to feed Brush #40
#42 - Cam Follower Bearing to move Bar #33 which is moved up and down by Back Cam #15
#43 - Two Leaf Springs - half circle shapes that go from the top of Cross Bar 22 on each end to the bottom of Cross Bar #33 on each end thus forcing the Cross Bars to spring toward each other.
#44 - Hub secured to Shaft #5 having 8 Wings (each Wing numbered separately)
#45 - Brush and Brush Holder to carry the ground Wire from the Transmuter to the Hub #44
#46- 61 - Sixteen Electrodes equally spaced around Hub #45
#62 - Wing secured to Rotor
#63 - Wire secured to front of Wing #62 and connected to Electrode #47
#64 - Wire secured to rear of Wing #62 and connected to Electrode #50
#65 - Wing secured to Hub
#66 - Wire secured to front of Wing #65 and connected to Electrode #49
#67 - Wire on rear of Wing #65 connected to Electrode #52
#68 - Wing secured to Hub
#69 - Wire on front of Wing #68 secured to Electrode #51
#70 - Wire on rear of Wing #68 connected to Electrode #54
#71 - Wing secured to Hub
#72 - Wire on front of Wing #71 secured to Electrode #53
#73 - Wire on rear of Wing #71 secured to Electrode #56
#74 - Wing secured to Hub
#75 - Wire on front of Wing #74 secured to Electrode #55
#76 - Wire on rear of Wing #74 secured to Electrode #58

#77 - Wing on Hub
#78 - Wire on front of Wing #77 secured to Electrode #57
#79 - Wire on rear of Wing #77 secured to Electrode #60
#80 - Wing secured to Hub
#81 - Wire on front of Wing #80 secured to Electrode #59
#82 - Wire on rear of Wing #80 secured to Electrode #46
#83 - Wing secured to Hub
#84 - Wire on front of Wing #83 secured to Electrode #61
#85 - Wire on rear of Wing #83 secured to Electrode #48
#86 - Eight sets of five half-lapped .030 metal Magnets measuring 15/16" long by 3/8" wide
#87 - Mylar insulation between Magnets
#88 - Front Copper Ring measuring 12" I.D. - 13" O.D., .100 thick
#89 - Front Copper Ring Support Fixture
#90 - Spacers and Bolts to hold #89 Copper Ring to front Motor Cover
#91 - Back Copper Ring measuring 12" I.D. - 13" O.D., .100 thick
#92 - Back Copper Ring Support Fixture
#93 - Spacers and Bolts to hold #92 Copper Ring to Back Motor Frame

THE MOTOR WORKS AS FOLLOWS:
The best starting point for becoming familiarized with the mechanical working parts is by viewing Figure 1. This view shows a brass shaft turning in two aluminum housings. Secured to this 110 shaft is a Hub #44, Collar #6, Snap Ring #14 and six Trip Shafts - 1/8" thick extending 13/16" away from the Shaft. These pins are located on the Shaft as shown, in order to lift Arm #10 differing amounts. The Shafts closer to Pin #11 will lift the end of Arm #10 slightly higher than the Shafts further away because of the changing leverage distance. As this movement is further defined, the reason for this variable lifting to Arm #10 will become evident. The electrodes #46-61 on the rotor need to be fed magnetic power in a very specific manner which can only be accomplished by camming Power-electrodes toward the 16 Rotor Electrodes and then quickly pulling the Powerelectrode away.

As a result, a pulse spans an air gap between the vertical Power-electrodes and the Rotary Electrodes. It is important to view Figure 1 closely in order to grasp the close proximity between the two Copper Rings #91 and #88. The focal point for the driving power of this rotor is the Magnets located in the Rotor Wings. These are centered between the Copper Rings. This view is very helpful in gaining an understanding of the magnetic activity that takes place.

As we review the Trip Pins we first see that the 6 Pins #8 are secured to Shaft #5 in two separate circular planes of three Pins each, 120 degrees apart. Using an imaginary center line we see the pins in one row are 3/8" in distance from the others. As the Pins turn, they arrive at Arm #10 at
60 degrees apart. The single camming sequence is as follows: Arm #10, which has its tripping portion on the high point of Part #9 is being lifted by a Camming Pin at the closer point to Pivot Shaft #11. This action lifts the 1/4" brass shaft out of its 1/8" deep half-round holding slot and causes Arm #10 to pivot on Shaft #11. Shaft #11 is supported by Part #13 which is being held from moving backwards by Snap Ring #14, therefore Arm #10 moves downward on the opposite end which has a Fork Extension #12. The Fork Extension pushes against a tapered portion of Cam #18 and causes the Cam to move back toward Housing #3 at a .018 distance. During

this backward movement Cam #18 compresses 3 Compression Springs #17. After this backward movement, Cam #18 contacts brake material #7 which is secured to Collar #6. Since this Collar is secured to the Shaft, Cam #18 is immediately driven in the direction of the shaft rotation for 30 degrees. As this Cam moves, Cam-follower-bearing #32 which was at a low point of the Cam becomes raised 3/8" carrying Arm #31 away from Shaft #5. Arm #31 which is firmly secured to Cross Bar #22 then moves this Cross Bar 3/8" away from Shaft #5. This action closed the gap between the electrodes on Bar #22 and the Rotor Electrodes, thus a charge of magnetic current is transferred across the remaining .015 air gap. When Cam #18 advanced 30 degrees, the 2 Rotor Electrodes were charged.

By being allowed the travel amount of 30 degrees which was governed by machined slots within the Cam, the cam was allowed to swing on three 3/8" shafts protruding from Cam #15. Before the Cam actually moved the full 30 degrees, it compressed three Compression Springs that are carried inside it which are located at the end of the slots. Before the actual 30 degree movement can be manifest a slowing of the cams' forward movement happened by compressing the springs against Shaft #16. Now Cam #18 is against Shaft #16 and the forward driving power of #18 is ready to advance Cam #15. At this point note that Cam #18 has activated one stroke of the Cross Bar charging the two Rotor Electrodes. Next, Shafts #16 are pushed forward and they cause Cam #15 to move in the direction of a 30 degree rotation. During this electrode lifting action for Cam #15 which is now traveling in the direction of the rotating shaft, Cam #18 remains extended in its forward slot position because it is still contacting the Brake Material #7.

Now another electrode lifting cycle is completed during the forward travel time of Cam #15 which is a 30 degree forward movement. Note at this particular time, the instant the Arm #10 is stopped in the next slot which is 30 degrees away, Cam #18 already has done twice as much electrode lifting work as Cam #15. To maintain this forward driving action for Cam #18, Arm #10 must be held in the 'up position which then maintains pressure against Springs #17. This is done by having the arm slide on the high section of Stationary Ring #9. The moment Arm #10 goes down into the next slot and pressure is released between Cam #18 and Brake Material #7, Cam #18 instantly goes backwards 15 degrees. This is due to Compression Springs #20 between Shafts #16 and the trail end of Slots #19 which are compressed and free to push Cam #18 backwards. The backward movement is limited to 15 degrees because this is the distance the Compression Springs are allowed to push, which is determined by their length and tension.

Since the forward travel of Cam #18 stopped 15 degrees over the top of a Cam Lobe, this 15 degrees of backward movement sends its Cam-follower-bearing to the top of a lobe and again Cam #18 pulses a set of electrodes. As a result, the inside Cam does 3 electrode movements to one movement of outside Cam #15.

Note then that a total of 4 electrode strokes happen in only 30 degrees of travel of Arm #10.As the following cam tripping movement is revealed it shows that the pulsing is controlled and eliminates the possibility of supplying more pulses than needed.

PULSES FOR SPEED CONTROL

The camming system just described is a mechanism that produces the necessary requirements which achieve the end result so when in action it has a stop gauge effect on the productive magnetic system. The rotor design has a configuration which counteracts the air speed during the sequenced joining together of the electrodes as they are held in a positional attract state. This prevents the motor from going faster than the estimated 1600 r.p.m.'s. When a load is applied to the shaft and the rotor speed is reduced, the air load in turn is reduced, thus allowing the inflowing magnetic power to be utilized with less restriction. The camming system increases its strokes as the load increases.

The following camming explanation will show how the volume of flowing magnetic current to the unit is constantly being adjusted in accordance with the speed. The action is now explained-with the motor in a stop position and power on the four electrodes which are waiting to charge therotor. The shaft is now positioned where Pin A is under Arm #10. Pin A is holding Arm #10 slightly above Part #9 and a push of the Shaft begins a pulse that causes the unit to begin rotating. Pin A located on the closer row to the Pivot Shaft #11 lifts Arm #10 and passes on by. This action causes 4 cam actions or 8 pulses to happen as explained. Next, Pin B located in the row closer to Part #9 which arrives at Arm #10 just as it goes into the next slot 30 degrees away and again 4 cam actions happen or 8 magnetic pulses take place. The Shaft has now turned 60 degrees and 16 pulses have already happened.

At this point, a quick acceleration of the motor speed occurs and an overflow of pulsing no longer takes place. The pulsing will now adjust to the needed amount per turn depending on the load. When the unit is running at full speed the 6 Trip Pins are no longer utilized in a 1,2,3 pattern but are skipped as needed, depending on the speed of the shaft. Now when Pin A lifts Arm #10 above Part #9, it lifts the Arm not only free of Part #9 but actually higher than the needed distance for allowing the advance. This higher amount is caused by the arm extension which telescopes approximately 3/4" from the point of contact between Arm #10 and Pin A. This brief moment of lifting allows Pin B to pass under Arm #10, not contacting it. Arm #10 then remains stopped without electrode lifting because the Cross Bars are spring held together keeping the Cam Bearing on the low points of the cams. When Trip Pin B passed under, the main shaft advanced 60 degrees.

The next Trip Pin C passes under with no contact to Arm #10. Next Trip Pin D will again raise up Arm #10 which is a Pin located 180 degrees away from starting Pin A. When pins speed on past, there is a lessening of the pulses which happens until finally at high speed a maximum of 3 stoppings to the Arm results per revolution of the Shaft which is 4 more strokes than needed. When the unit pulses, these 4 extra strokes are then used. We must take into consideration the air build-up that is lost during acceleration. This pulsing, when operating at a minimal speed has the potential of 12 stopping stations per revolution of the Cam. This potential attains the proper one pulse per wire per 360 degree turning of the Shaft which then utilizes the 4 additional pulses before a full momentum is generated.

Arm #10 is lifted higher when Pin A is the contacting pin and the Arm has less lift when the contacting Pin is Pin B. Whichever pin should happen to do the lifting there is a dependency on the speed of the Shaft. When the speed is increased, a Pin that would normally be used slips on by. If a load attempts to slow the speed of the Shaft, the magnetic power is instantly increased allowing more magnetism which converts into magnetic energy which completes the work. As the Pin A lifts Arm #10, not only does the magnetic current adjust to the load but the action also supplies the needed accommodation for a pulse pattern existing between each individual pulse stroke. In the mechanical action there is a time sequence that produces the needed magnetic pulsing. As the first pulse is manifested by Cam #18 which advanced forward independently, a given time period elapses before the next pulse happens. The increment of time that is produced results in a longer span than between the next 2 pulses. When Cam #18 pulls Cam #15 forward, both move their electrodes upward with a little time differential between them.

Next, the reverse action of Cam #18 produces only a minute difference in the increment of time than the first pulse in order to reverse mass in motion. This cycle is now finalized by the cam being returned. We now have a time variation as to when this cam sequence will again occur which is dependent on the speed of the motor. This pattern of irregular timing intervals repeats. We see in all of this that this mechanical action provides the necessary movement which in turn produces the magnetic pulsing needed to drive the rotor.

ROTOR CONFIGURATION

The rotor configuration being disclosed serves distinctly different purposes. The primary reason for this particular rotor shape is that it affords a push-pull magnetic driving action in relationship to the stationary copper rings. A further reason for this particular shape is to provide a back-up air pressure to the driving magnetic power which then helps the pulsing circuit to maintain an estimated 1600 r.p.m.s. The design of the wings causes the magnetic energy to complete a circuit by using a wing to wing response which in turn incorporates the stationary copper rings. This wing to wing response is aided by a series of magnets that are embedded and circuited in the individual wings. The magnetic activity generated in the wing magnets becomes a determining factor in how the inflowing magnetic energy will be used.

Let us closely examine the magnets and their mounting procedure. In order to clarify our thinking, a comparison is being made between magnets in a standard DC motor and this unit. Permanent magnets in the stator of a DC motor are constantly manifesting their magnetic power and the response is always between them and a set-up magnetic field in the rotating part or armature. If the armature also had permanent magnets a problem of stopping their magnetic power would be quickly evident because of the attract locking hold that would take place. However, this motor requires a set-up of a magnetic field which is then dissipated in an on-off format which sets up a continuing magnetic pole response. The need to dissipate the magnetic field thus eliminates the use of permanent magnets because of the magnetic resistance that would occur. In considering the magnetic material needed it is important that the material be one that can sustain a magnetic field and yet yield it at the proper time. This release timing is of utmost importance because without the proper sustaining and release, the whole pulsing system would be uncontrolled.

Pulsing determines the amount of input of the magnetic energy which then establishes the outlay of the magnetic current or flow coming from the Mother Unit. This release timing element goes on to affect all facets of the operation.

The following list includes parts and facts pertaining to them which all contribute to the timing sequence.

#1 - size of each Magnet
#2 - number of Magnets in each Wing
#3 - particular placement of each Magnet Set
#4 - molecular structure of the Metal Magnet Material

#5 - amount of magnetic charge initially put into each Magnet
#6 - coating of the surface of each Magnet
#7 - insulation between each Magnet
#8- material holding the Magnets
#9 - mounting direction of each Magnet Stack
#10 - size of the wire secured to each side of the Magnet Stack
#11 - air space around each Magnet
#12 - distance apart one Magnet Set is from the other
#13 - number of Rotor Wings
#14 - pulsing sequence for the Metal Magnets charge
#15 - volume of magnetic energy pulsed into the Metal Magnets during each pulse
#16 - pulsed sequence between all eight Wings
#17 - placement of stationary Rings
#19 - composition of Stationary Rings
#20 - wing angle when mounted to the Hub
#21 - Wing Thickness
#22 - Wing configuration
#23 - molecular structure of the Rotor Assembly
#24 - placement of the 16 Electrodes in the Rotor
#25 - wiring procedure for connecting the Wing Wires to the Electrodes
#26 - bonding procedure for securing the Wires to the Wings
#27 - method for bringing the power into the Unit
#28 - method for building up a magnetic charge
#29 - method for camming four power Electrodes in their proper timing sequence to activate the rotating Rotor Electrodes.

ROTOR CONSTRUCTION

This rotor is made by pouring a blend of known metals into a suitable mold which then forms a one piece cast Rotor Hub with eight Rotor Wings. This particular blend of known metals is used in this casting because of the molecular structures within the metal which is not achieved in other metal blends. This metal is known as TiAlCO—B, which has the fortitude of steel without the weight and can sustain high heat without disruptive seaming. We therefore have no concern that the wing structure is only a thickness of 1/8 inch. This blend of metals also has the unique quality of becoming a magnetic field when a magnet is located in it, and is conducive to receiving and distributing magnetic energy or responding to it. A simplified statement could be that this metal welcomes magnetism.

Viewing Figure 2 shows eight Rotor Wings, each with a set of five metal Magnets located in them. The metal composition used to construct these Magnets is a strong aircraft type aluminum called Alminal W16, (Alminal W16 — M—1273, M—2174; 3 Cu, 4 Mg, 0.6 Si, 0.6 Fe, 1 Mn, 0.2 It, 4.0—8.5 Zn, Bal Al. WP—temper: 78,000 — 85,000 TS; 67,000 - 74,000 YS; 5-4 E1. For structural members; age—hardened, high strength). One important reason for the use of this metal Alminal W16 is it is compatible to the blend of metals being used in the wing structure. The Alminal W16 metal needs to be magnetically charged in a particular manner to attain the needed response. This metal is first anodized on one side before the metal is charged with DC current which then turns it into a magnet. This new magnet will manifest only a modest amount of flux power because the percentage of the ferrite metal is only 0.6 percent. The flux power strength must be minimal to get the necessary response so as to eliminate magnetic resistance. In this particular application magnetic strength is not a major factor.

It is simply a catalytic action at the outset. The anodized side of the Alminal W16 is chargednorth and the opposite side is charged south. Since the magnets are cut from an anodized sheet the edges of these metal magnets remain unanodized. This is very important because when the magnets are half-lapped as shown in Figure 3 the magnetic flow takes a different path circuit on the north anodized side than on the south unanodized side. Viewing Figure 4 which is an isometric view of the rotor, it can clearly be shown how the north magnets of all eight wings face the south magnets of the eight wings. In other words, an unanodized side faces an anodized side. By having the one surface anodized it causes a magnetic path between rotor blades to build up in a powerful attract force. This same magnetic path would not be manifest if the metal were not anodized. A secondary reason for anodizing is that the structural polarities having to do with the anodized side cannot be depleted because the anodizing process penetrates a portion of the metal. The result is that you have an ongoing closed circuit.

WIRE SIZE USED BETWEEN ROTOR ELECTRODES AND THE WING MAGNETS

Figure 3 shows a cut-away view of a wing with the magnet mounting procedure. The center of this magnet stack is 6½ inches from the center of the rotor shaft #5. Point A is a lip of a wing .007½ thick, milled inward to .040 to contain the magnets and wires. The window frame construction completely surrounds the anodized magnets. Location B is a milled wing slot at the exit point of the window which secures the window wires leading to the electrodes. These wires are secured on the front as well as the rear of the wing.

Looking at the rectangular shape of the window, it is important to note that the surrounding wire before entering slot B should not complete a closed design but should retain an end opening of 1/16 inch. This wire exiting position is important because it puts the proper amount space between the wires that are mounted on of the front and rear of the wing. As stated previously the release timing in magnets vary according to the strength of the set-up magnetic field. When the .015 thick magnet wire is bonded on the front and rear of each rotor wing the amount of power that flows is
determined by the receptivity of the particular wire toward magnetism and the thickness of this wire will vary according to each application (such as another type of mechanism).

MAGNETIC POWER AND ITS TRAVEL

Looking at the subject of magnetic travel we see that it has a neutral charge but the 16 electrodes in the rotor all have a set charge of north and south. As we look at the 8 wires wrapped around the north side which is anodized, we see a charge that travels from the magnets through the wire back to the electrodes. Spaced between these north electrodes are 8 south electrodes, which continue a pattern of magnetic feedback to their respective electrode. The inflowing neutral magnetic current is offered to any of these electrodes by means of the 4 camming power lines. The current is then attracted to the electrodes in their turn and the incoming magnetic current takes on an established polarity. The instant it crosses over to the rotor electrode, it becomes like the electrode it contacts, and then the power flow is reversed. This reversal occurs when the incoming magnetic power travels from the electrodes through the wire manifesting itself as it travels along its length and moves on attract into the wing. The finalization of this travel circuit is completed as it circles the Alminal magnets.

At the completion of this process the magnetic power manifests briefly as if it were a powerful giant magnet, and responds to the copper ring pulling the rotor for rotation. It is at this point that a critically important magnetic action takes place. After the magnetic material sustains its field, it must dissipate at the proper time, which then allows the magnetic energy to respond in a reverse action as it travels along the same wire back to the electrode where it originally started. When it first started the strength of the electrode charge was only equal to that power which the magnet was sustaining at that time. But now with a build-up of additional power, the beginning charge has been greatly increased.

This reversal of magnetism needs a time span to properly attain its function of full power to achieve its full power load which is why the power electrodes are quickly pulled away from the rotor electrodes after the charge transfers. With this quick returning action there also comes a time delay before the next pulse is needed to trigger to this same electrode. The cam-follower-bearings are quickly pulled to the low point of the cam which then limits the dwell time at the high point. Cross Bars 22 and 33 have leaf springs mounted on the ends which cause these two bars to always move toward each other after stroke movement takes place. The charge volume is also controlled by the air gap distance of .015 which actually helps to enhance the magnetic polarities.

The arrangement of the metal magnets in the wings is of the greatest importance for proper pulse action and it is for this reason that every mounting detail is next carefully itemized.

METAL MAGNET ARRANGEMENT

Looking at position D we see the five .030 thick Alminal magnets half-lapped, having four pieces of .010 thick Mylar measuring 3/16 inches wide by 7/8 inches long, sandwiched between the magnets. The magnet polarity is north-face up on the front, and south-face on the rear and the same process of lapping is used both front and rear.

Five individual north faces comprise the front attract polarity and the rear has the reversepolarity facing downward. The reason for the separation of the five magnets is that it allows each one to individually pull and discharge the magnetic power which enhances the smoothness of the flow between the magnet and ring.

Explanation of slot size: The wing is .125 thick. The needed outer window size on the wing is 7/8" by 1 inch. Top-to-bottom spacing is as follows: .060 of room is required at the center of the slot to accommodate the thickness of two Alminal magnets, plus .010 for the mylar which is between the magnets. A .015 thick wire fits above the magnets on the top and .015 thick wire fits below the magnets on the bottom. This total distance then is .100. This leaves a remaining .025 wing material equally sharing a ledge of .012 1/2 above and .012 1/2 below equaling .125. The magnets are cut 3/8" wide by 15/16" long, therefore the inner width dimension of the window frame needs to be 15/16 inches. The magnets are glued together half-lap, forming a stack 1-1/8" total length, with the inner window frame size being 1-1/8 inches. Using these dimensions when the magnets are installed in the wings one will see a magnet size of 7/8" by 1 inch, with the remaining magnet portion hidden under the holding ledge.

Notice that the angle of the magnet stack is such that the lead edge in the direction of rotation, (see arrow), is centered on the stationary copper rings 88 and 91. See Figure 2. One reason for the mounting of the magnets at this particular angle is because the five individual metal magnets can be mounted in the curved window frame without the need to bend the individual magnets. The mounting of the magnets at this angle is also important because the built-up charge in the wing can then travel along the wing to the wing tip which generates the needed magnetic flow.

THE CIRCUIT FOR THE INCOMING MAGNETIC POWER

Viewing Figure 2 shows electrode #24 in an alignment with one of the 16 electrodes mounted in the Hub which is Electrode #48. Power is now being attracted into Electrode #48 by jumping across an air gap of .015 from power electrode #24. This electrode is now giving up the magnetic charge that was stored in material #23 because the silver electrode #24 is screwed directly into this material. The power came into this material from coaxial cable #26 which is secured to Brush #25. This brush is spring held in a standard brush holder keeping light contact between #25 and #23. As this charge of magnetic energy goes into Electrode #48 it travels 90 degrees back against the rotation to the rear of wing #83 as shown, because a wire .015 thick is secured to Electrode #48 and is held to the Hub with insulation tubing until it arrives at wing #83. The wire is then stripped of insulation and secured directly to the rear of the wing. A very light scoring of the wing is done to form a holding slot which then prevents the wire from vibrating free during normal running. This wire then goes around the five half-lapped magnets making direct contact with them.
The rectangular loop that is formed by the wire is not a completed loop contacting the original incoming wire. The result then of this circuit is that a magnetic charge is now on the rear side of wing #83. At the same moment electrode #28 is feeding magnetic power into moving electrode #52. This power is coming in on Coaxial Cable #30. Electrode #52 has a wire connected to it that travels 90 degrees back against the direction of rotation and goes to the rear of wing #65. We see therefore that 2 wings, 65 and 83 are now charged. The next wings to be charged will be charged in a very particular wing charging sequence. The wings getting charged will always be 90 degrees apart and the charging happening only in groups of two.

A start sequence for example could be as follows. Wire 66 on the front of wing 65 will get charged on its front wire. The mating wire that gets charged will be on wing 71, front wire 72. For ease of seeing the pulsed sequence, the wire charging sequence is marked alphabetically. Therefore these two wires are both called A when viewing Figure 2. The charge will then go to wing 77, rear wire 79 and wing 83, rear wire 85, both marked B. Next the charge goes to wing 62, rear wire 64 and wing 68, rear wire 70, both marked C. The charge next goes to wing 74, front wire 75 and wing 80, front wire 81, both marked D. The charge next goes to wing 65, rear wire 67 and wing 71, rear wire 73, both marked E. The charge next goes to wing 77, front wire 78 and wing 83, front wire 84, both marked F. Charge next goes to wing 62, front wire 63 and wing 68, front wire 69, both marked G. And finally charge goes to wing 74, rear wire 76 and wing 80, rear wire 82, both marked H.

This arrangement of back and forth charging in different wing combinations is not always accomplished by having either the top set of electrodes on Bar #22 or the bottom set of electrodes on 33 charging the rotors. These electrodes are used together but are also used in combinations.

When a time lapse happens, as for example, after the forward movement of cam #18, the cross bar #33 will use its two electrodes to charge the wings. However, when the next two strokes happen almost simultaneously being caused by both cams moving forward, the four electrodes are pushed together to the rotor electrodes which then discharge their magnetic power at exactly 90 degrees apart. It is at this point that combination charging happens between electrodes located on one bar with electrodes from the opposite bar.

For example when the start sequence happens at wire 66 on the top of wing 65 and its mating wire 72 on wing 71, they might not align with two electrodes on one or the other cross bars but rather they might align with an electrode on one bar with an electrode on the other bar. We can accept this because it is not necessary for a completed wire circuit between the two grouped wings. Each wing has its own completed circuit. The timing between the two wings is merely a needed magnetic timing response. Miniscule time shortages should they occur would have no effect as the pulsing would not be affected because it does not work on the principle of wire to wire feeding as in the case of a standard motor.

GROUND WIRE

There are five coaxial cables coming to the motor from the mother unit, which are needed to supply the power. Ground Wire #45 is connected to the cleaning brush on the Transmuter and goes directly to a brush that contacts the hub of the rotor. Particles flow from the Transmuter Armature to the rotor hub which maximizes the use of the flowing magnetic energy. This brush is insulated from the motor housing.

MOTOR WEIGHT AND BENEFITS

This magnetic motor has unmatched horsepower to weight ratio. This light weight feature is possible because of the elimination of iron and/or steel which is the primary weight source of standard electric motors. The objectives of this motor are many and one of them is to provide a magnetic powered motor which prevents the danger of explosion or fire, a common problem when standard electric motors burn out. Magnetism when used does not manifest itself as spark thus eliminating the hazard of fire. Since there are no motor coil windings, there is no need for special training to build the unit. This is a relatively inexpensive motor to produce and maintain once the TiAlCo-B metal is obtained. This unit can also be constructed in various sizes.

6.1.1.4. Heating Unit

- Heats average home
- Requires special alloy
- Requires Particle Transmuter to supply power
- Requires blower
- Produces heat without spark
- Can boil water
- Demonstrates nuclear fission without harmful radiation

This unit is related to the transformation of magnetic energy and certain gases directly into heat energy without the use of ignition, as we know it. This demonstration of nuclear fission without intense hear or harmful radiation will redirect our course in the exploration of nuclear energy. It is a heat-producing device that will greatly reduce atmospheric pollution and conserve energy.

This device includes two spherical hollow pressure chambers that are joined together at a mixing junction at which point heat exits the device.

SUMMARY OF THE UNIT

This heater utilizes the blending of a light gas with a heavy gas activated by flowing magnetic current to create heat. This newly formed heat energy is created through a very particular blending of magnetized magnetic molecular structures, that when combined and mixed with air manifest as heat without ignition or spark.

CONSTRUCTION DETAILS TO PRODUCE A MAGNETIC HEATER

Viewing Figure 1 shows two eight inch dia. spheres with one located two inches above the other. These spheres are made of 1/8 inch thick TiAlCo-B metal; a metal that welcomes magnetism yet is NON-magnetic (meaning a magnet will not adhere to it). Each sphere is made in two halves which when assembled into an 8 inch ball, become a chamber able to hold an interior pressure. Thus the two halves are joined by compressing an 'O' ring seal.

To set a required magnetic polarity to the upper sphere, this sphere is completely covered on he outside surface with one layer of 92 thousandths thick powerful plastic magnet material. This magnet material is all of the same polarity on the side contacting this upper sphere. Just for identification purposes we will say the polarity is all of a NORTH charge.

Located in the center of this sphere is a 3 inch dia. copper ball, polished on the outer surface, and held in place by non-metal support rods. Through the use of a coaxial cable, a magnetic current generator sends neutral magnetic current directly to this copper ball. This cable, when passing through the 1/8 inch thick TiAlCo-B sphere, is insulated and sealed to allow the sphere to hold an interior pressure. The proper coaxial cable to use is one that has a copper coated steel wire in the center. Magnetic current will not flow properly into a solid copper wire. We need to think of the copper coating (on the steel wire) as serving the purposes of allowing the magnetic current to flow in both directions simultaneously.

This upper sphere is then pressurized with about 15 pounds per square inch of a light gas which fills the sphere from the top location (see Fig. 1). This gas supply is a standard bottled gas unit.

While there are several light gases one might use, one suggestion is to use a pale pink gas to charge this upper sphere. We need not be concerned that this is a gas type heater in that the gas only serves the purpose of a catalyst. The actual amount of gas being used is very minute with the magnetic current being the primary heating source of energy.

When the light gas has charged this upper sphere, it is at this point that magnetic current is fed to the center copper ball. The neutral magnetic current's very nature is to seek a polarity. The gasthen serves the purpose of allowing the neutral magnetic current to cross the 2-1/2 inch space distance and grab a north polarity from the 92 thousandths (.092) thick plastic magnets. The polished surface of the copper ball and the inside polished surface of the TiAlCo-B sphere cause am back and forth bouncing action for this magnetic energy flow. This activity builds into a pressure which will be released when the pressure control valve is opened (see valve on Figure 1). These newly formed combinations of particles have a NORTH charge and the light gases interior pressure is amplified by the gas susceptibility to the incoming magnetic current.

The TiAlCo-B sphere is a material, which has a high magnetic permeability, which also enhances the NEEDED particle interchange process.

At the same moment in time, the bottom sphere is also charged with a gaseous and magnetic current. The bottom sphere is charged with a heavy gas formed by combining two different gases. The bottom heavy gas combination needs to balance with the upper light gas, thus ultimately one must use 2/3 less heavy gas then the light gas IN VOLUME. This heavy gas might be a combination of hydrogen and a gas, which will cause the mixture to be LESS combustible.

As this heavy gas combination is caused to enter this bottom sphere a bleed-off valve located at the upper part of this lower sphere, allows air to be pushed out until only heavy gas is inside this lower sphere. After gas is inside this lower sphere, the flowing magnetic current is sent into the lower 3" copper ball. The lower sphere has the same plastic magnet covering; however, the charge facing the sphere is all a SOUTH charge. Because of this opposite polarity charge, the mixture of energy from the upper sphere, becomes a massive ATTRACT charge to the lower sphere's energy charge.

To start the heating process, the valve under the upper sphere is opened, as well as the valve at the top of the bottom sphere. These magnetic molecular structures instantly join on attract inside a short mixing chamber. At this moment, NO heating has taken place. Next, an air blower is activated which pulls these blended particles out of the mixing chamber and causes them to be mixed with air. The instant air is added it causes a nuclear chain-reaction, which spreads through these blended magnetic molecular structures causing a release of energy in the form of heat. The amount of air is controlled so as to become a temperature adjustment tool. For example, to send the flow into a home heating duct system a certain air volume is required; however, to send the heat under a container to boil water, a different amount of air is needed. While the heating is adjustable, there is never ignition into spark as is common with BURNING heating systems.

Both spheres are fed a continuous but MINIMAL amount of bottled gas because, as stated, the gas serves the purpose of being a catalyst for the incoming neutral magnetic current. One might wonder why one bowl is located directly above the other. The reason is that the upper bowl can maintain a full charge of gas because this light gas will only exit the upper sphere when the sphere is full. Also, the bottom sphere, having a heavy gas combination, fills the sphere up to the top. With this arrangement, the incoming neutral magnetic current always has a conduit of gas to then get attracted to its given polarity.

This action of forming heat is the result of a nuclear chain reaction whereby each fission initiates further fission's resulting in the release of energy that is manifest as RADIANT heat. There is NO substantial heating until the mixture is blended with air.

The location for this unit to heat a home would be in the standard position, which considers that heat rises, thus requiring the needed heating duct system.

PARTS LIST:

1. Is an outer non-metal frame to hold spheres and an air blower.

2. Upper sphere 8" inside dia., 1/8 inch thick made of TiAlCo-B metal (polished on inner surface).
3. One 'O' ring seal to join two halves which form a sphere.
4. An outer layer of 92 thousandths (.092) thick plastic magnet material having all one NORTH polarity facing inward.
5. Is a 3" copper ball, polished, firmly held in the center of the sphere with non-metal rods.
6. A coaxial cable wire insulated from Part #2 and firmly secured to Ball #5.
7. An exit pipe having a pressure type needle valve, which controls the energy flow out of Part #2.
8. A bottle of light gas which is pale pink in color connected to flow into Part #2.
9. Support braces to hold sphere #2 to frame #1.
10. Is a bottom sphere 8 inch inside diameter, 1/8 inch thick made of TiAlCo-B metal, also polished on the inner surface.
11. An 'O' ring seal to allow pressure inside Part #10.
12. An outer layer of .092 (92 thousandths) thick plastic magnet material having the SOUTH face inward toward the TiAlCo-B metal.
13. A 3 inch copper ball, polished, held in the center of part 10 with non-metal rods.
14. A coaxial cable wire insulated from Part 10 and firmly secured to Part #13.
15. An exit pipe on the top of Part #10 having a pressure controlled needle valve to regulate the flow of energy out of part #10.
16. A bottle of a combination heavy gas to flow into #10.
17. A mixing chamber to allow the NORTH charged gas from part 2 to blend with the SOUTH charged gas from part #10.
18. Are vent holes to allow air volume to be adjusted as needed.
19. A standard heater type air blower used to pull the blended energy mixture out of chamber 17, cause it to be mixed with air, then drive the heat to areas requiring heating.

IV.) Teil Mechanisches OVER Unity System

oder doch nicht?

Veljko Milkovic

The following information is adapted from V. Milkovic's website: http://www.veljkomilkovic.com and shows us a simple mechanical system that produces 9:1 over-unity and antigravity

BIOGRAPHY

Veljko Milkovic was born in 1949 in Subotica (Serbia), and since 1952 he has been living in Novi Sad (Serbia), where he finished secondary school and studied History. Apart from being interested in past events, he is also a researcher, an inventor, an innovator and a writer. Furthermore, he works on futuristic projects. So far he has got around 110 inventions and has designed 36 approved patents, some of which have been in use for years. Moreover, he has received many domestic and international awards for his work spanning over many decades.

He invented a self-heating eco-house and a number of ecological innovations, which also have been in use for a long time. According to his drawings, many such eco-houses have been built in Novi Sad, Sombor, Zajecar, Ljig (Serbia)... He has taken part in about 30 scientific gatherings in the field of energetics and ecology as well as many projects concerning scientific research.

He is the president of the Department for ecological innovations and the organiser of the Exhibition of ecological innovations with VRELO Society from Novi Sad. He is also a member of the Association for the popularisation of science - Novi Sad.

Among various domestic and international awards, he has received November charter of the city of Novi Sad in 2002 for the remarkable contribution in the field of ecology and energetic as well as in 2002 a gold medal of Novi Sad fair for the invention hand water pump with pendulum.

He is very familiar with Petrovaradin fortress (city of Novi Sad, Serbia); he has been exploring it since 1960. In 1965 he managed to decipher orientation marks at the crossroads and establish the logic of subterranean labyrinth with "^", "Y" and "T" crossroads. This approach helps him to examine the 20km deep undergrounds of the fortress in a faster and safer manner.

His engineering and ecological projects inspired by Petrovaradin fortress are in practice: "Self-heating ecological house", "Mushroom garden and greenhouse with reflecting surfaces" (mushroom gardens for growing bukovace near Cenej and Petrovaradin, Serbia, were built), Project "Forests for food production" (in use on several locations in the province of Vojvodina, Serbia and Montenegro) and "Autonomous battery charger".

In 1975, librarian Srenko Drk hired him as a guide for less known parts of the fortress especially subterranean military galleries.

Novi Sad museum awarded him with the letter of thanks for the "ardent contribution in research of the Petrovaradin fortress".

In the late 70's, as a member of scientific and technical editorial board of the Cultural Center in Novi Sad, he organized and lectured at panels about Petrovaradin fortress. Some of the participants were an academician and a professor Bogdan Brukner and a professor Milan Vranic.

An idea of a modern sod house as a new way of living gave him élan to continue with researching subterranean galleries.

In 1983, Veljko Milkovic and Mr. Srenko Drk founded "The club of friends of Petrovaradin fortress" within "Vladimir Nazor" library in Petrovaradin (Serbia).
In 1997 he announced the book entitled "Mysteries of Petrovaradin fortress", which was published as a feuilleton, a script and a book. That was the first time that the gap in the literature about Petrovaradin fortress and its underground has been filled. It is interesting that many journalists and authors like Mr. Živko Markovic, a historian, claimed that subterranean military galleries represent the largest attraction in Petrovaradin.

In his numerous lectures and during short excursions he talked about dangers, but also about great tourist potential of Petrovaradin, Fruška Gora, Srem (Serbia) and the central part of the (river) Danube-basin.

During public appearances in previous years, Veljko Milkovic announced major archaeological discoveries from Palaeolithic age at the location of Petrovaradin fortress and in the central Danube basin. Experienced archaeologists stated that "it is beyond dreams" and that it was "absolutely unexpected"...

But it happened and it was confirmed by the latest archaeological discoveries from Palaeolithic age. In his numerous public appearances, Milkovic claimed that the central Danube basin is a cradle of prehistoric period, which was confirmed by the recent discoveries by European scientists. He is also in possession of a unique and unusual archaeological collection. He also gathered numerous minerals and fossils, from the Danube-basin, as well as remains of previous civilisations.

In his research study he worked hard on gravitation phenomenon and also on the improvement of anti-gravitational experiments and, connected to that, anti-gravitational operating systems.

In the last few years he has been working in the field of single and double mechanical oscillations, which represent a new source of widely, used energy, based on which he has 22 approved patents. His present aim is to explore and use practically the potentials of double oscillations and, in connection to that, a new source of energy based on inertial forces and gravitational potential.

Among other things in his experiments, he managed to get 12 times more output energy than input energy. In last 10 years, no one argumentatively disputed research and measurings carried out by Milkovic. Through such achievements, Veljko Milkovic laid the path for new challenges in physics in the 21st century, which could be the forerunner of the new great scientific revolution.

Milkovic is in possession of numerous prototypes and models (photo & video), as well as ideas for various machines and devices. Over the years, Milkovic received many positive comments and opinions relating to his research from domestic and foreign physicists, professors, academicians, engineers, researchers etc. It is more and more definite that Milkovic's inventions can be used for production of numerous practical devices, thus creating a range of new products which could help in improvement of overall economical situation and better the situation in society.

So far he has published the following books:

"Solarne zemunice - dom budunosti" ("Solar sod houses - the house of the future"), (1983),
"Ekološke kue" ("Ecological houses"), (1991 - printed in four unedited editions),
"Šume za proizvodnju hrane - zamena za njive" ("Forests for food production"), 1992 (translated into Esperanto the same year),
"Ka antigravitaciji - kompaktna vozila" ("Towards anti-gravitation compact vehicles"), (1994),
"Antigravitacioni motor" ("Anti-gravity motor"), (1996 - with translation into English),

"Perpetuum mobile" ("Perpetuum mobile"), (2001),
"Petrovaradin kroz legendu i stvarnost" ("Petrovaradin through legend and reality"), (2001),
"Petrovaradin i Srem - misterija prošlostit" ("Petrovaradin and Srem - mystery of the past"), (2003),
"Svet misterija - novi pogledi" ("The world of mysteries new views"), (2004),
"Petrovaradinska tvrava - podzemlje i nadzemlje" ("Petrovaradin fortress over and underground"), (2005) and
"Novi turistiki potencijali" ("New tourist potentials"), (2006).
Milkovic also published noticeable feuilletons and notes:
"Niskoenergetski život" ("Low-energy life"), 1996.
"Energetski potencijal re?nog zaliva" ("Energetic potential of the river bay") 1996.
"Prethodna civilizacija" ("Previous civilisation"), 1999.
"Msterije Petrovaradinske tvrave" ("Mysteries of Petrovaradin fortress"), 1999.
"Petrovaradinska tvrava izme?u legende i stvarnosti" ("Petrovaradin fortress between legend and reality"), 1999.
"Nestale civilizacije" ("Missing civilisations"), 2000.

His book have been accepted both in domestic and foreign prestigious libraries, such as the Library of Congress, Washington DC and his publications can be found in the British Library in London, Moscow Library and Library of Alexandria. His publication have also been quoted in many Internet encyclopaedias and other sources.

He also found the solution how to lessen the problem of the "endangered inventor" and needs to make his secret public. That is exactly what Veljko Milkovi? is doing by publishing his books and publications.

Books: http://www.veljkomilkovic.com/KnjigeEng.html#antigravitaciji

Contact:
Veljko Milkovic
Bulevar Cara Lazara 56 21000 Novi Sad Serbia Phone: +381 21 6366 487; +381 64 153 20 72
(*Contact for all questions, business proposals, cooperation suggestions and calls from abroad) E-Mail: milkovic@neobee.net Web: http://www.veljkomilkovic.com

HAND WATER PUMP WITH A PENDULUM (Patent - YU 49002 B)
CONTINUOUS PUMPING OF WATER WITH A LITTLE FINGER
ENORMOUS EFFICIENCY CONCERNING THE INPUT OF ENERGY - UP TO A 1000 LITRES OF WATER PER HOUR WITHOUT A MAJOR EFFORT
Picture 1 --- Public presentation of the hand water pump with a pendulum during the Agricultural Fair in Novi Sad (Serbia), 2003. The invention won a gold medal during the 2002 fair.

New and technically original idea - hand water pump with a pendulum - provides alleviation of work, because it is enough to move the pendulum occasionally with a little finger to pump the water, instead of large swings. Using the minimum of human strength in comparison to present classic hand water pumps enables efficient application in irrigation of smaller lots, for water-wells and extinguishing fires even by old people and children, which was proved by a large number of interested future consumers during the presentations.

Hand water pump with a pendulum is a realization of a new, original, and even unbelievable, by very simple solution for pumping water. Work is alleviated because easier, long-lasting and effortless use of the hand water pump has been enabled. Input energy for starting the process of pumping, in form of occasional pushing of the pendulum, is much less than with typical hand pumps.

Picture 2 ---Hand water pump with a pendulum for pumping water out from wells or reservoirs consists of a cylinder (1) with a piston (2), lever system (3), a seesaw (4), a pendulum (5), a reservoir (6) and output water pipe (7).

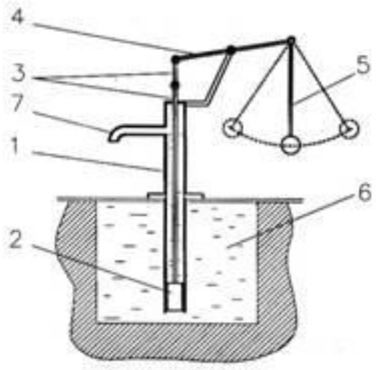

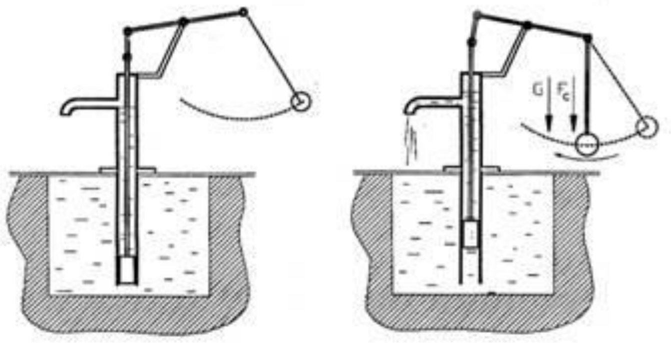

To get the water running out of the pump, the pendulum needs to be out of balance. After that, based on gravitational potential, the piston starts oscillating and the continuous stream of water is coming out of the output pipe. The pendulum should be occasionally pushed, to maintain the amplitude i.e. the stream of water.

The pump works well with all sizes of the pendulum, but mainly with the amplitude of 90°.
The advantage of this invention compared to present hand pump solutions are: less force to start the pump, less water consumption, both arms can be used to fetch the water.
The invention is applicable on other devices that use lever mechanisms, such as a hand press etc.

It is possible to pump out a 1000 liters of water per hour, without any fatigue and continue with the pumping. Both arms are free for fetching water, and both elderly and children can use it, since maintaining the oscillation of the pendulum does not request any special training or dexterity.

Picture 3 --- Side view of the pump and the position of the piston, lever and the pendulum during operation of the pump.

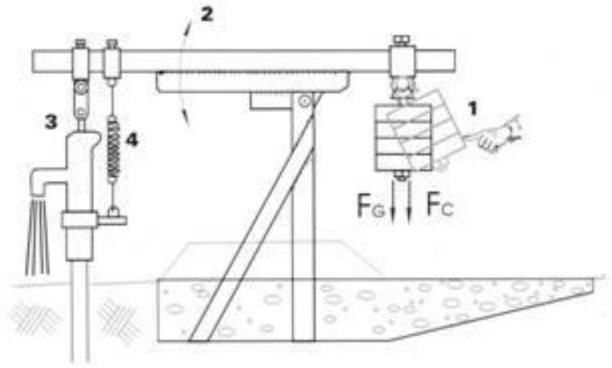

Whereas typical hand pumps require significant effort and an average person can use the pump continuously only for several minutes, the hand water pump needs the minimum of the effort, because it is only necessary to swing the pendulum and maintain the oscillation for several hours, without any fatigue.

All details on the hand water pump with a pendulum and the information can be provided by the author, Veljko Milkovic, who is willing for any form of cooperation with all potential strategic partners and customers for production and application. So far, there was a lot of interest for the application of the hand water pump with a pendulum both in domestic and foreign markets, as well as for further development of the product.

Experiments: 12:1 Over-Unity from 2-Stage Oscillators

During the last few years, Veljko Milkovic did several measuring, which showed the energetic excess, 12 times larger than the input. That means that two-stage oscillations (http://www.veljkomilkovic.com/OscilacijeEng.html) provide around 12 times more than the input.
Measuring's were various. Regarding the camshaft mechanism and forces made with piston mechanisms, etc.

Of course, mistakes are possible, whether smaller or bigger. This is not strange in physics. It is also possible to improve devices. The main thing is to determine the correct frequencies as well as relations.
Major improvements are possible, which would compensate possible mistakes during the measuring.

You can also see the description of the research of two-stage mechanical oscillations, as well the prototypes and models with which these measurements were conducted:

Veljko Milković

COEFFICIENT OF PERFORMANCE OF THE DOUBLE LEVEL OSCILLATOR - MECHANICAL HAMMER

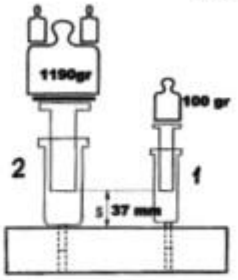

TIME OF SINKING (~2 min) IS EQUALIZED
FOR BOTH PISTONS 1 AND 2

1) $F = 1\,N$

2) $F = 11.9\,N$

$A = F \times s$

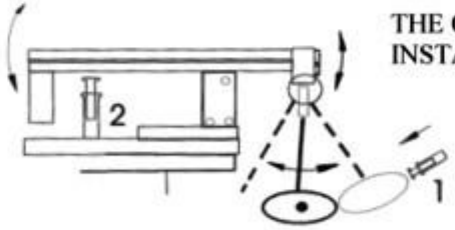

THE OSCILLATIONS (1) ARE ALMOST INSTANTANEOUSLY MAINTAINED

THE COVERED DISTANCE IS 37 mm FOR BOTH PISTONS

1) INVESTED ENERGY=0.037 J
2) GENERATED ENERGY=0.4403 J

IT CAN BE ESTIMATED THAT η=11.9 OR 1190%
MORE EFFICIENT THAN THE SIMPLE DOUBLE LEVER

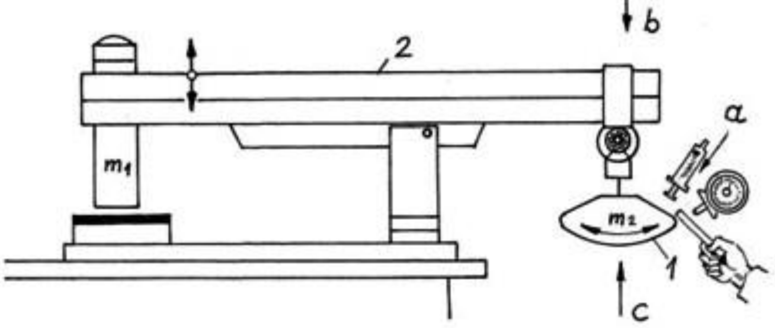

a) Minimal changes on the measuring tools (piston, force measuring instrument, spring-plate etc.) while maintaining the oscillations of the pendulum (1).

b i c) There is almost no movement of the double lever (2) even though the measuring tools are maximally loaded during the hits or pushes

MORE EFFICIENT THAN CAM MECHANISM

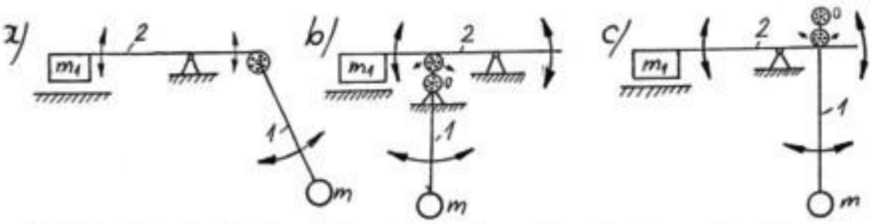

START : The physical pendulum (1) is elevated into horizontal position equally for all three version (staring amplitude ~180°)

Number of hits of the double lever with m1		Duration of the pendulum's energy		Deformation of the sponge	
		min	sec	min	sec
a	78	19 min	08 sec	19 min	22 sec
b	21	1 min	20 sec	–	40 sec
c	37	1 min	49 sec	–	51 sec

MEASUREMENT WITH SPONGE-PIPE

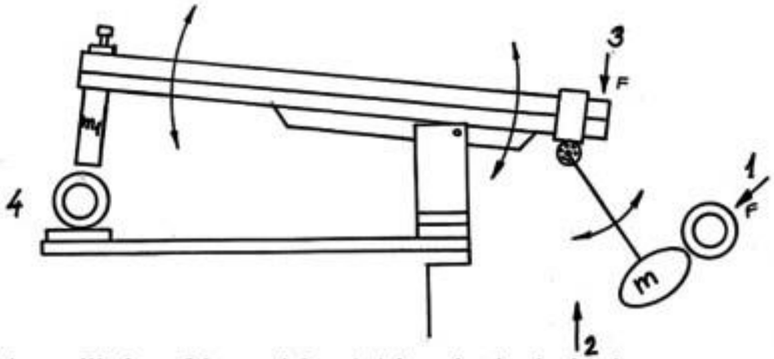

1/ When the oscillation of the pendulum (m) is maintained with the sponge-pipe (1) there it is not deformed significantly, but the sponge-pipe (4) on the left side of the double lever with m1 is maximally deformed

2 ; 3/ When the right side of the lever is pushed with the sponge-pipe from the bottom or top position while the double-lever is resting, then the deformation of sponge-pipe (4) is insignificant but the sponge-pipe (1) is maximally deformed

Measurements using an oscilloscope have been performed recently. Dynamo flashlights have also been used. One handheld dynamo flashlight was used to push a pendulum in peak position to maintain the oscillation of the pendulum and the other dynamo flashlight was positioned under the lever on the output part of the oscillator.

Measuring was performed and voltage values were acquired for the dynamo flashlight used for maintaining the oscillation of the pendulum and the one pressed by the lever during oscillations:

Dynamo flashlight analysis (200 KB; PDF --- in English): http://www.veljkomilkovic.com/Images/Analysis_of_the_dynamo_lamp.pdf

Measurement with an oscilloscope (514 KB; PDF):
http://www.veljkomilkovic.com/Images/Measurement_with_oscilloscope.pdf

An official measurement was also conducted in cooperation with the Institute for energetics, electronics and telecommunications in Novi Sad (University of Novi Sad, Serbia). The same dynamo flashlight were also used (one was used to push the pendulum in peak position to maintain the oscillation of the pendulum and the other one was positioned above the lever on the output part of the oscillator) and the following values were acquired: ...

http://www.veljkomilkovic.com/Images/Results_of_official_electric_measurement.pdf

RESEARCH OF TWO-STAGE MECHANICAL OSCILLATIONS TWO-STAGE MECHANICAL OSCILLATOR - UNUSUAL MACHINE

A simple mechanism (Figure 1.) with new mechanical effects, representing the source of energy. The machine has only two main parts: a massive lever and a pendulum. The interaction of the two-stage lever multiplies input energy convenient for useful work (mechanical hammer, press, pump, electric generator...).

Figure 1. Mechanical Hammer with a Pendulum 1 - anvil, 2 - massive lever, 3 - lever axel, 4 - physical pendulum

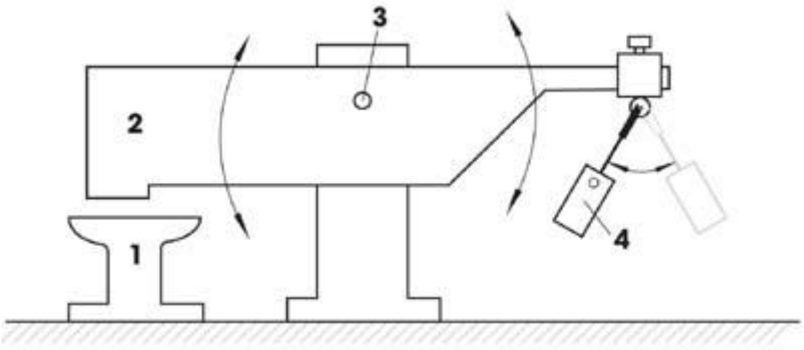

The best results were achieved with the lever axel and pendulum at the same height, and the base of the massive lever above the center of mass, as shown in Figure 1.
ORIGINS OF ENERGY BASED ON DIFFERENCE IN POTENTIAL

Energy is created due to the difference in existing devices. Consumers of energy use the difference in the potential between the plus and the minus (direct current) and zero and the phase (alternate current). All heat and thermal motors accomplish useful work due to the higher temperature and pressure. Mills and power plants use different levels of water...

However, difference in the potential of two-stage oscillator, "unusual machine" has not been considered so far.

Figure 2. Difference of the Potential during Oscillation of the Physical Pendulum1 - weightless state in the upper position 2 - culmination of force during the fall in the lower position

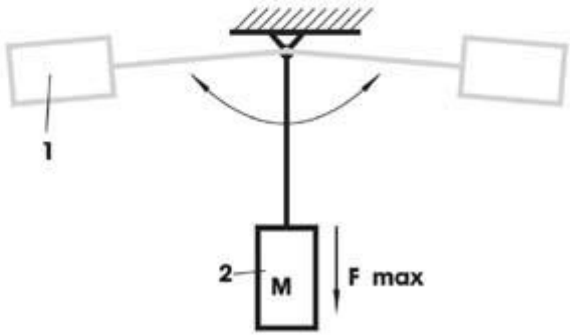

Since there is a difference in potential (Figure 2.) between the weightless state (1) and culmination of force (2) during oscillation of the pendulum, the same is true for centrifugal force, which is zero in upper position, and culminates in the lower position at maximum speed. Physical pendulum is used as a single-stage oscillator in the system with a lever.

After many years of trials, consultations and public appearances, it could be said that this occurrence is being researched and investigated all over the world (author is in possession of evidence). Simplicity enables construction of houses by owners themselves.

Efficiency of the model can be increased by mass, since the relationship between the volume of the lever weight and its surface increases the mass.

Figure 3. Experimental Models

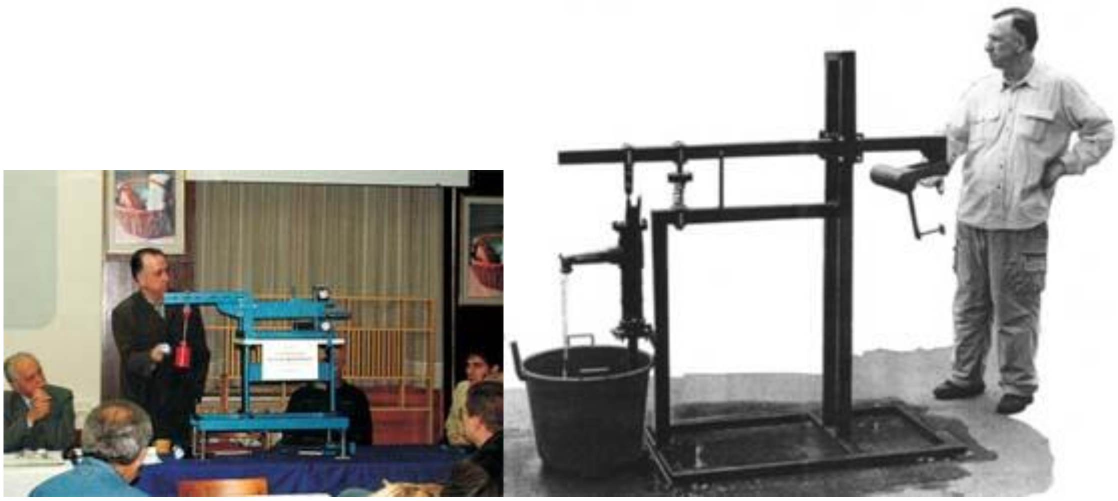

Extreme technical solutions can be tourist attractions even as prototypes.

Previous examples emphasize the importance of synchronized frequency with every model. Oscillations of the physical pendulum have to be maintained with certain speed, otherwise input energy is wasted.

Mechanical hammer (photo & video) and a pump with a pendulum (photo & video) work more efficiently with a shorter pendulum, but with air movement (educational toy - photo & video), longer pendulum works better.
According to the theory of oscillation, oscillatory movements in nature are the most frequent ones, and can be difficult to analyze.

POSTULATES AND DOGMAS

The easiest way is to proclaim something as impossible and refer to laws. However, are all laws of Physics perfect and eternal?
Luckily, and most probably, they are not. Therefore, exceptions of extremely efficient machines are possible (Fig. 1-3.).

In the same way, the speed of light can be deemed unreachable, according to Einstein's formula E=mc2, because the mass would be infinite. However, the mass does not change with speed, and the kinetic energy increases with the square speed. Therefore, the speed of light can be reached by future space crafts, if these ideas are considered.
PHOTO & VIDEO PRESENTATION of two-stage mechanical oscillations research (prototypes and models, the new mechanical effects, experiments...): http://www.veljkomilkovic.com/PrototipiEng.html

A LEVER WITH A PHYSICAL PENDULUM AS A SIMPLE MACHINE

Although the basic model, which Veljko Milkovic called "The mechanical hammer with a physical pendulum", showed in the first experiments that the output energy is larger than the input energy, Milkovic concentrated on the practical use of the model. This can be seen by the order of the patent requests. Later, it turned out that this model is also a perpetuum mobile, when usage of input energy is in question. However, the model is energetically open both at the entry and the exit part, so the exact measurement of efficiency would be complicated. The matter of the exact measurement was postponed, but the noticed fact was that the model represents a new type of a simple machine, and that is very interesting and useful, even without multiplying input energy.

The next part will cover the characteristics of the "basic model" which make it a simple machine, putting aside the matter of the efficiency percentage.

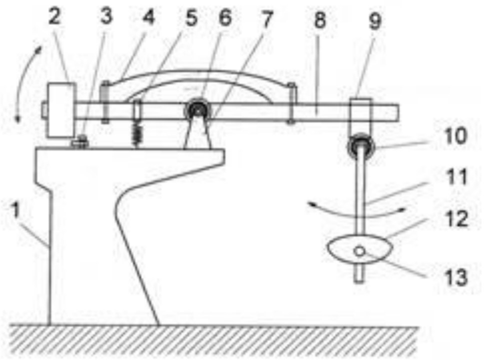

Mechanical hammer with a physical pendulum is an original device - a machine which is turning the oscillations of the physical pendulum, hanged on an arm of a two-armed lever, into the oscillations of the weight on the arm of the same lever. The axis of rotation, the axle of the physical pendulum is parallel to the axis of rotation, the axle of the lever. The axle bed of the lever is connected to the surface with girders. The axle of the physical pendulum is oscillating up and down, when the pendulum is out of balance. Thus, the weight on the other arm of the lever is oscillating as well. The arm on which the pendulum is positioned is lifted with every movement of the pendulum away from the balance, because the weight of the pendulum weight is decreasing, and the same lever arm is lowering when the pendulum is closer to the balance position and that happens in succession. The period of oscillation of the lever and the weight on it is twice shorter than the period of oscillation of the physical pendulum and the weight on it.

In Picture 1, the triangle represents the support for the two-armed lever. The small circles are the two axis. The lever rotates on one and the physical pendulum on the other. On the right arm of the lever is an angle on which the physical pendulum is oscillating, and on the left arm is the weight which oscillates together with the lever. As soon as the physical pendulum is out of balance and begins to oscillate, the lever starts to oscillate as well..

Picture1

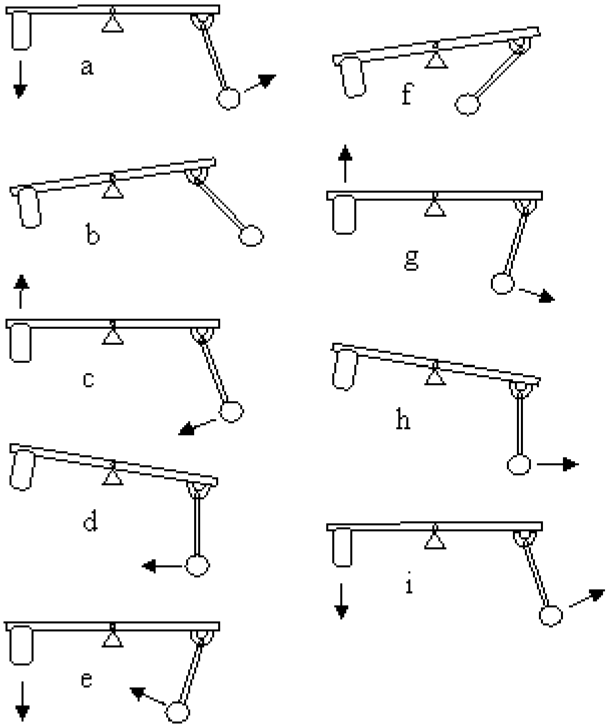

Forced oscillation of the weight on the lever can be of an impact type when the weight, at the end of every oscillation, hits the surface or an object on the surface like a hammer. At that moment, the force of the impact is greater than the force maintaining the oscillation of the pendulum, which still does not say anything about the balance of energy since the effect of these two forces is not simultaneous. It would be a completely different story if we were talking about strength and not force, but we would need a different approach in that case.

"EXCESS" ENERGY

Veljko Milkovic conducted a series of experiments on the basic model - mechanical hammer with a physical pendulum. All the experiments led to the conclusion that the input energy is smaller than the output energy. Since the law of energy sustainability could not help here, he did not spend too much time to explain the occurrence in a theoretical way.

One of the possible explanations was the effect of the forces involved in the work of the oscillators. Forces are more specific and simple physical entities than energy. However, there were many different forces present during the experiments, so it was hard to compare them.

Most of the experts and scientists familiar with experiments conducted by Milkovic did not go into more detailed analysis, with an exception of professor Bratislava Toši?. Unfortunately, his extensive mathematical analysis did not provide a clear result concerning the energy balance.

Experts usually followed their instinct. Some were "in favor", some were "against" perpetuum mobile. Among the first group, after some hesitation, was Nebojša Simin. Sceptical at the beginning, as many other physicists involved in this research, his resistance was defeated with a simple gesture. He put his hand on the lever which was oscillating. The pendulum continued to sway as if nothing happened, while the energy was transferred from the lever to his arm. The lever was working tirelessly, without a decrease in the oscillatory energy of the pendulum. It did not need a more convincing proof than this to convince him that this is the perpetuum mobile. It practically makes no difference whether the lever is doing something or not. That work does not reflect the oscillation of the pendulum, and the pendulum in return, as it oscillates, makes the lever to oscillate too. Simin was positive that the efficiency percentage of the lever with a physical pendulum larger than the one. At the same time, it meant that the law on energy sustainability cannot be applied for this model, which is only a step away from the autonomous perpetuum mobile. For the model to be autonomous, it was necessary to come up with an idea how to return a part of the energy from the lever to the pendulum, so that it would not stop because of friction and air resistance. Milkovi? solved this problem as well through his patents. Unlike Milkovic and his associates, Simin did not like the idea of giving the main role to the gravitational potential. If the friction is neglected, pendulum work force is equal to zero. On the other hand, no one doubted the meaning of the centrifugal force of the pendulum. It was clear from the beginning that they should follow that lead.

A lot of time was spent on the basic model and the matter of maintaining the oscillation of the pendulum, having in mind the friction and air resistance. Milkovic solved that problem with electromagnetic bumpers in the patent "The piston water pump with the pendulum and electromagnets" ,which he handed in for registration on 02/22/01. In that way, he completed his previous model: "Electric generator with the pendulum and magnetic bumpers" , from 06/14/00. Observed individually, neither of these two models are autonomous, but together, they are. The combination of these two models is the first model of perpetuum mobile.

Milkovic was also troubled with the problem of the relatively slow oscillation of the pendulum, which produced low-frequency current. He did not solve this problem fully so far. An attempt with the model: "The electric generator with an elastic pendulum handle" ,which offers faster oscillations, does not solve the problem, because that is a single-stage oscillator which has an efficiency coefficient lower than one. Among the first nine patents, this is the only one which has nothing in common with perpetuum mobile.

"Surplus" or "excess" energy was usually attributed to the gravitational potential. For sceptics, that was the "proof" that this could not be perpetuum mobile, because the gravitational field during oscillation of the pendulum is zero. In their opinion, that was enough to conclude that there could not be "excess" energy. The only thing everyone agreed on was the efficiency of the device.

Qualms about the efficiency coefficient could not be satisfied without a deeper analysis. The matter was the participation of the centrifugal force of the physical pendulum in the lever oscillations, as well as energetic consequences of that participation. That force does not influence oscillation of the pendulum, but is directly responsible for the oscillation of the lever. It is clear that the axis of the pendulum, if we neglect the rotation, does not have kinetic energy in the pendulum system, but it does in the lever system. However, potential energy of that point changes in the lever system. It was not clear whether the change of the potential energy, despite it is zero during one oscillation, has any effect on the phenomenon as a whole. As far as the work is concerned, the pendulum operates against friction and air resistance, and the lever operates, for example, through the hammer hitting the surface, or by producing the alternative current by means of induction. It was not clear which work force was bigger, the pendulum or the lever. The response could not be a direct one, because precise measuring was needed, but it could not have been conducted on the original model. This was also the case with the models Milkovic constructed in the meantime. One of them is the fan, which is a two-stage oscillator (Picture 2.). The fan is swaying for unusually long time after the pendulum has only once been put out of balance. But, the theoretical explanation in this case is even more complicated that the one of the original model.

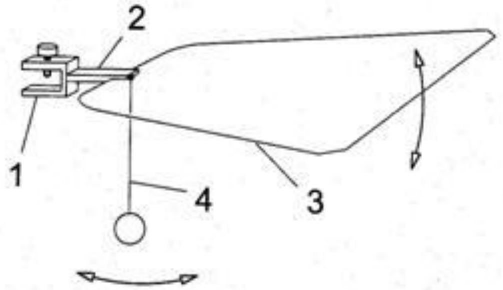

Picture 2

Let us get back to the basic model. Some things are obvious just when you look at the movements of the two-stage oscillator. There is a significant difference between the two conditioned oscillators. The lever is forced to oscillate, unlike the pendulum. The opposite is not possible because of the influence of gravity on the weight of the pendulum. If the pendulum is connected to an external energy consumer, the pendulum soon stops with oscillations, as well as the lever. However, if the lever is connected to an external energy consumer, the pendulum continues with oscillations. If the external consumer does not take all the energy from the lever, it will continue to oscillate with a smaller amplitude. If we suppose that the positive work force of the lever, and it's useful work force are greater than the work of the pendulum while it is overcoming friction and air resistance, we get "excess" energy. That "excess" can occur only due to the centrifugal force of the pendulum. However, is that really "excess" energy or does it just seems so?

ENERGY OF A PENDULUM AND A LEVER

By definition, energy is a capability of an object to perform work. Therefore, energy does not cause any consequences on anything, but it could and could not have consequences in regards of another object starting to move.

Even a basic model made by Milkovic established that a change of the lever energy does not change the pendulum energy. Mechanical energy of the lever, in the pendulum system, is equal to zero, so that the lever is not in position to affect the pendulum. In the surface system, the lever energy is different than zero, and it can perform work if something is on its way. The lever can perform work be hitting the surface, but it would still not affect the pendulum. What ever happens to the lever, the pendulum energy will not change.

Energy of the lever is at the disposal of an external energy consumer, which does not affect the energy of the pendulum, whether the lever is doing anything or not. If the external consumer takes over a part of this energy, the oscillating amplitude of the lever will decrease. Since the lever is the one oscillating forcibly and not the pendulum, it continues with oscillations even when partly dampened. Oscillation of the pendulum is uninterrupted even when the lever oscillation is completely dampened. As soon as the lever stops being a working body and stops providing energy to the external consumer, it starts oscillating again, with a same amplitude as before. This is a clear and unambiguous sign of "excess" energy.

Mechanical energy of the lever occurs without additional input of energy from the outside, due to the way in which the pendulum is moving. Work force of the lever does not mean that a pendulum must lose it's part of the energy. Pendulum just needs to be moving. On the other hand, the pendulum is not moving because it is getting the energy from somewhere outside, but because of inertia. In other words, the lever is capable to denounce a part of its energy for the external consumer, even though that process does not include any working body outside of the device. This is all under condition that the pendulum is oscillating without obstructions. It is understood that the pendulum has been previously thrown out of balance. After a short time, this energy in the total operational, energetical or power balance can be neglected.

Friction and air resistance were the stumbling block, in both theoretical and practical sense, especially on the pendulum. Milkovi? solved this problem in an indirect way, with the combination of two models.

In this way, interpretation of the device does not fall under the usual theory of energy sustainability. Classic mechanics either did not foresee objects such as multi-stage oscillators or it overlooked certain characteristics of these object. Or, maybe both.

GRAVITATIONAL POTENTIAL EVERYWHERE

Whether we like it or not, gravity exists and we can not influence it, since there is still no gravity isolator. However, physical pendulum is in weightless state in its upper position during oscillations.

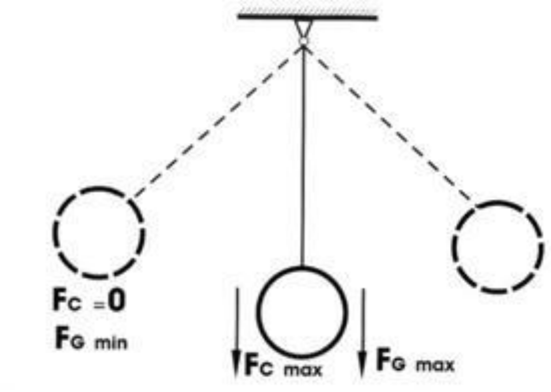

This works as a substitute for a gravity isolator, and the efficiency proved to be extremely high at two-stage oscillators shown above.
Experiments also confirmed supplemented formula for kinetic energy, which explains the surplus of energy.

Speeds are added together, originating from the impulse i.e. energy invested in maintaining the pendulum in oscillation, which happens in the upper position.
Additional acceleration of the pendulum is due to gravity. If the above mentioned formula is applied for calculation, the surplus of energy is clear, and it originates from gravitational potential.

$$E_k = \frac{M(v_1 + v_2)^2}{2}$$

In addition to results in earthly conditions, space probes had excellent results, so it is useful to mention that kinetic energy can be increased with the help of gravity.

VIDEOS
Videos of two-stage mechanical oscillations research with review of new mechanical effects, experiments, prototypes, models, measurements... and introduction of new source of energy on the basis of inertial forces and gravity:

1. Full presentation (36 minutes - 44 MB; English subtitles) --- http://www.veljkomilkovic.com/Video/Veljko_Milkovic_(video-1)_full_video_presentation.wmv
2. http://www.micropixel.biz/veljkomilkovic/videos/Veljko_Milkovic_(video-1)_full_video_presentation.wmv

2. Device for testing single-stage and two-stage oscillations (06:34 minutes - 7.28 MB) --- http://www.veljkomilkovic.com/Video/Veljko_Milkovic_(video-2)_Device_for_testing.wmv
http://www.micropixel.biz/veljkomilkovic/videos/Veljko_Milkovic_(video-2)_Device_for_testing.wmv

3. Fast model with an eccentric rotor (01:38 minutes - 1.82 MB) --- http://www.veljkomilkovic.com/Video/Veljko_Milkovic_(video-3)_Fast_model.wmv

http://www.micropixel.biz/veljkomilkovic/videos/Veljko_Milkovic_(video-3)_Fast_model.wmv

4. Mechanical hammer with a pendulum (04:46 minutes - 5.29 MB) ---

http://www.veljkomilkovic.com/Video/Veljko_Milkovic_(video-4)_Mechanical_hammer.wmv

http://www.micropixel.biz/veljkomilkovic/videos/Veljko_Milkovic_(video-4)_Mechanical_hammer.wmv

5. Laboratory pump with a pendulum (04:20 minutes - 4.82 MB) ---

http://www.veljkomilkovic.com/Video/Veljko_Milkovic_(video-5)_Laboratory_pump.wmv

http://www.micropixel.biz/veljkomilkovic/videos/Veljko_Milkovic_(video-5)_Laboratory_pump.wmv

6. The universal two-stage oscillator as mechanical hammer (the weight of hammer is approximately 25 kg) (0:48 sec. - 3MB) ---

http://www.veljkomilkovic.com/Video/Veljko_Milkovic_(video-6)_Universal_oscillator-hammer.wmv

http://www.micropixel.biz/veljkomilkovic/videos/Veljko_Milkovic_(video-6)_Universal_oscillator-hammer.wmv

7. The universal two-stage oscillator as electric generator (nine small generators --- dynamo flashlights as output work) (0:46 sec. - 6.5 MB) ---

http://www.veljkomilkovic.com/Video/Veljko_Milkovic_(video-7)_Universal_oscillator-generator.wmv

http://www.micropixel.biz/veljkomilkovic/videos/Veljko_Milkovic_(video-7)_Universal_oscillator-generator.wmv

YUGOSLAVIAN PATENTS

Veljko Milkovic has registered some 110 inventions with the former Federal institute for patents, now Federal Intellectual Property Office (www.yupat.sv.gov.yu) in Belgrade (Serbia). On the base of that, 36 patents have been issued.

Veljko Milkovic is presently in possession of 22 patents, with several new ones on the way.

Below you can see titles of patent documents, for the latest 22 that had been approved:
(1) P-577/99 --- Hand Water Pump with a Pendulum

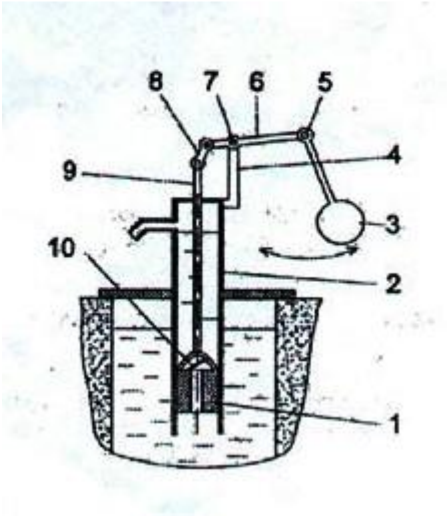

(2)

MP-32/00 --- Fan with a Pendulum

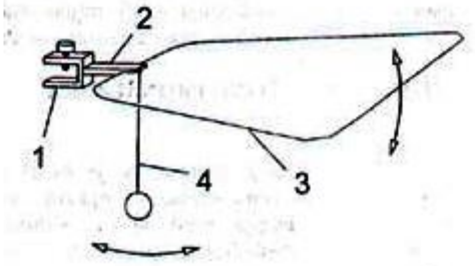

(3) MP-37/00 --- Electric Generator with a Pendulum and Magnetic Bumpers

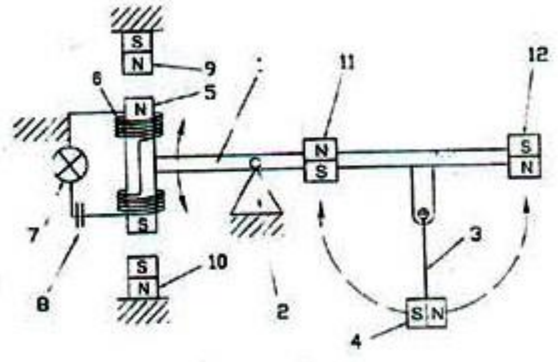

(4) MP-60/00 --- Mechanical Hammer with Adjustable Pendulum Weight

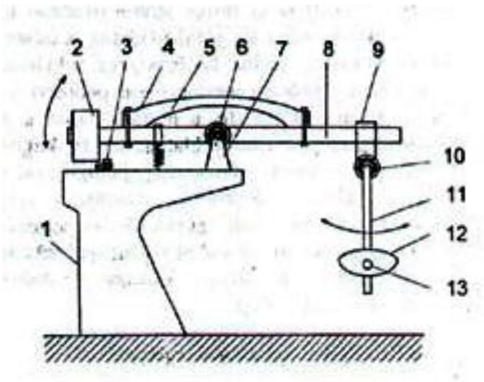

(5) MP-63/00 --- Electric Generator with Wind and Gravity Drive

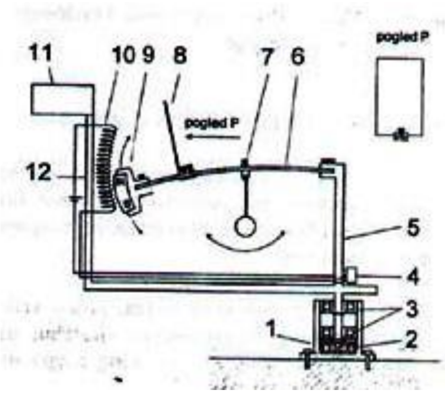

(6) MP-14/01 --- Press with a Pendulum and Magnets

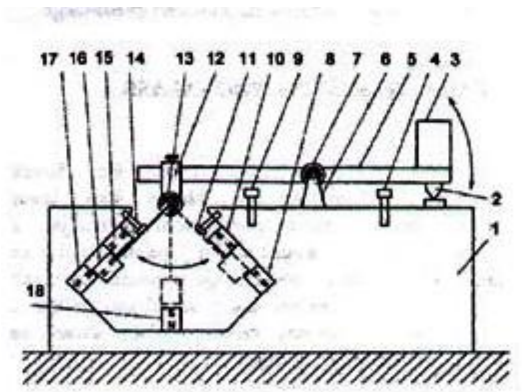

(7) MP-23/01 --- Piston Water Pump with a Pendulum and Electro Magnets

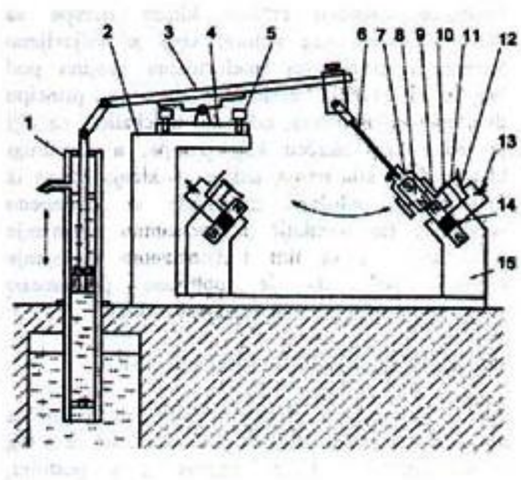

(8) MP-33/01 --- Electric Generator with an Elastic Pendulum Handle

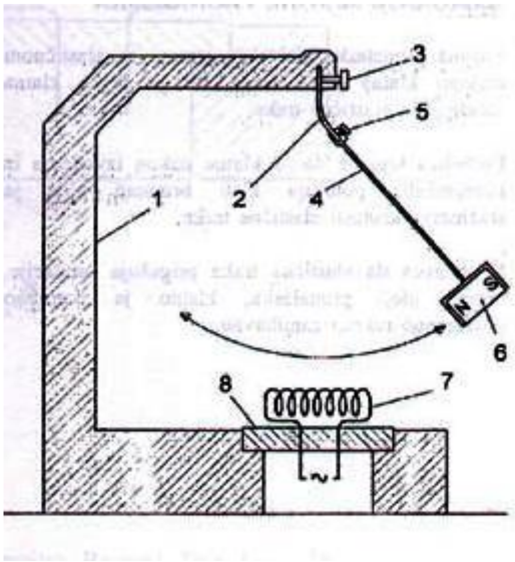

(9) MP-4/01 --- Wind Generator with a Two-Armed Lever and Wind Circle with an Eccentric Mass

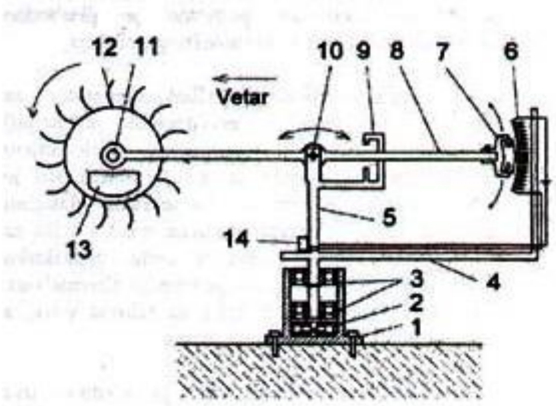

(10) MP-106/01 --- Instrument for Comparing the Amount of Work Created by a Pendulum.

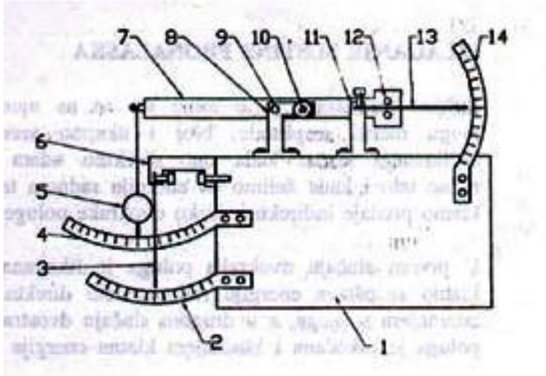

(11) MP-32/02 --- Device for the Production of Energy from Gravitational Potential and Centrifugal Force with Instruments for Efficiency Measurements

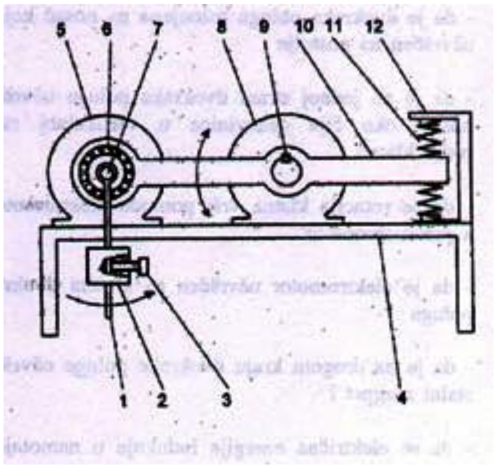

(12) MP-65/02 --- Piston Pump with an Electric Motor and an Excentre

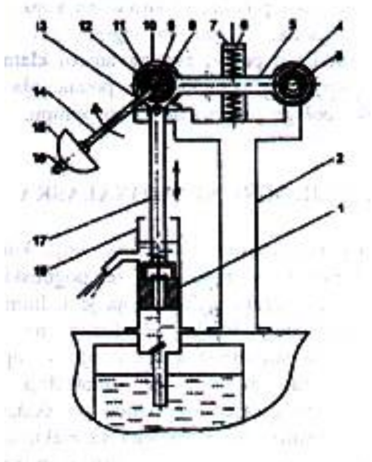

(13) MP-78/02 --- Sieve with a Two-Armed Lever and a Pendulum that Oscillates under Force

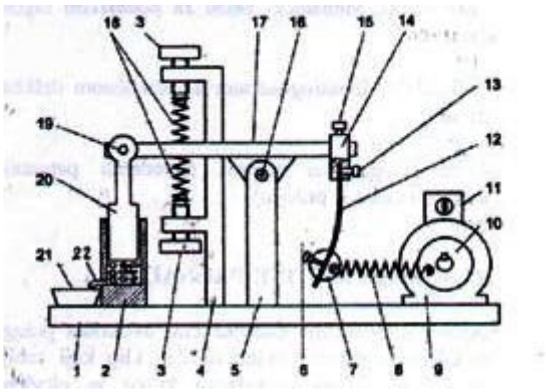

(14) MP-80/02 --- Device for Inspection of Oscillations Created by a Two-Armed Lever and a Pendulum Depending on the Place of an Impulse Force

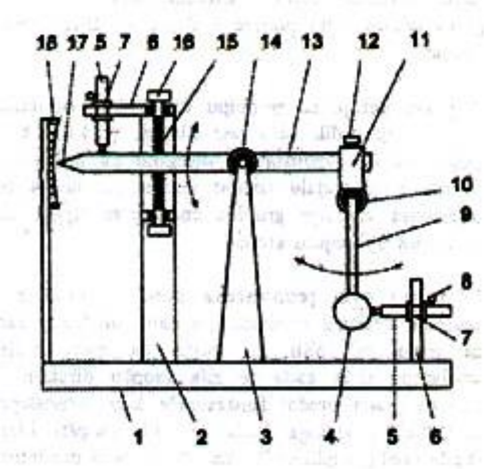

(15) MP-90/02 --- Hand Water Pump with a Pendulum

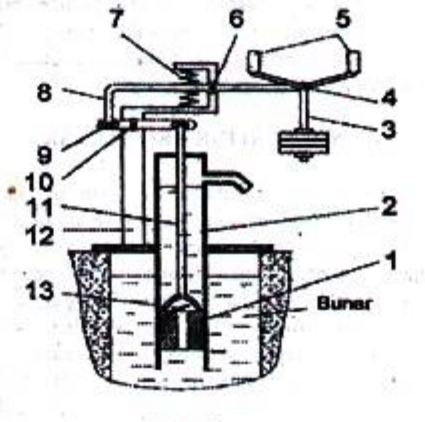

Slika 1.

(16) MP-94/02 --- Piston Water Pump with an Electric Motor and Cogwheels with an Eccentric Mass

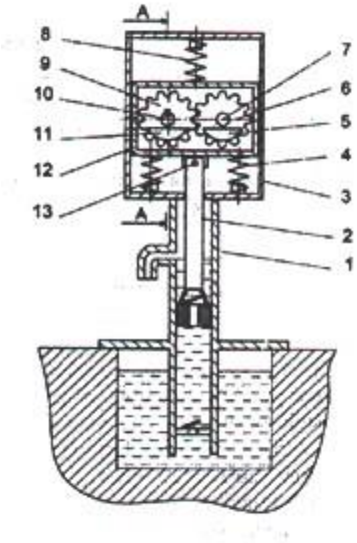

(17) MP-98/02 --- Mechanical Toy with a Pendulum and Three Oscillating Levers

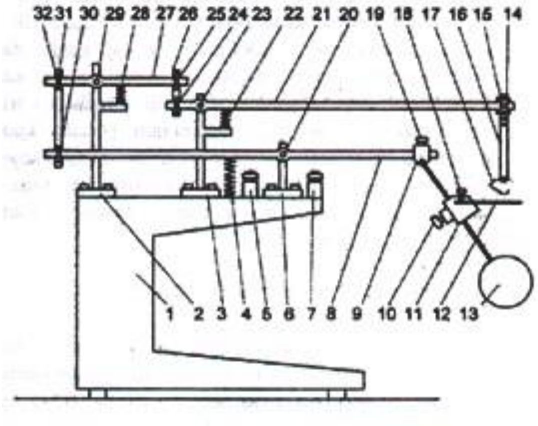

(18) MP-100/02 --- Generator of Electrical Energy Driven by an Electric Motor, Gravitational and Centrifugal Force

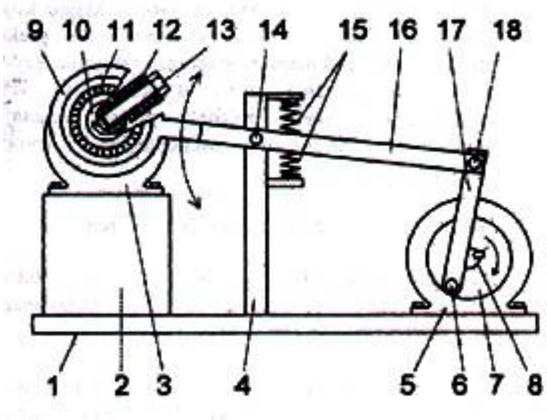

(19) MP-122/02 --- Hammer with an Electro Motor Drive and Rotating Eccentric Masses

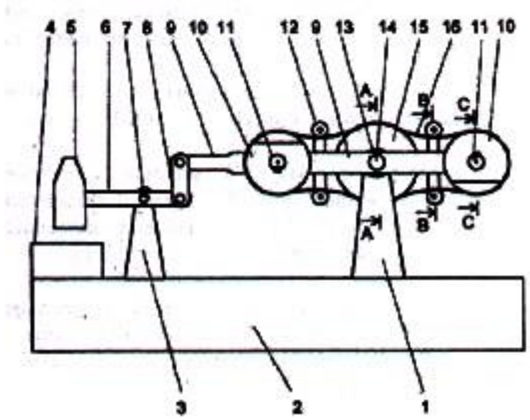

(20) MP-129/02 --- Horizontal Press for Briquette Production

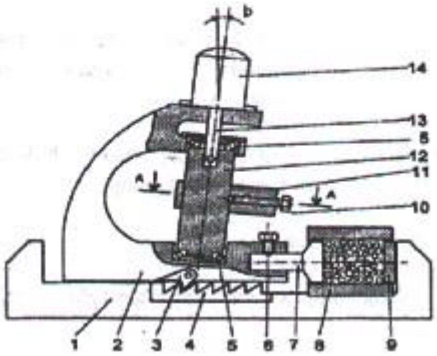

(21) MP-27/04 --- Instruments for Comparison of Single-Stage and Two-Stage Oscillations

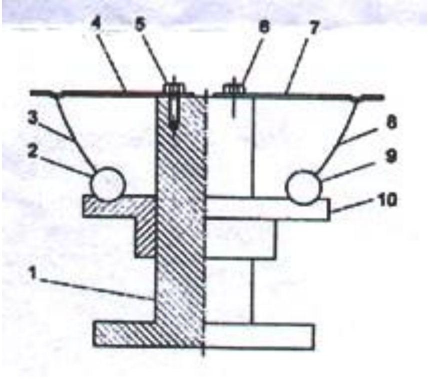

(22) 799/03 (49463 B) --- Machine for Producing Energy from Gravitational Force with Efficiency Measuring Instruments

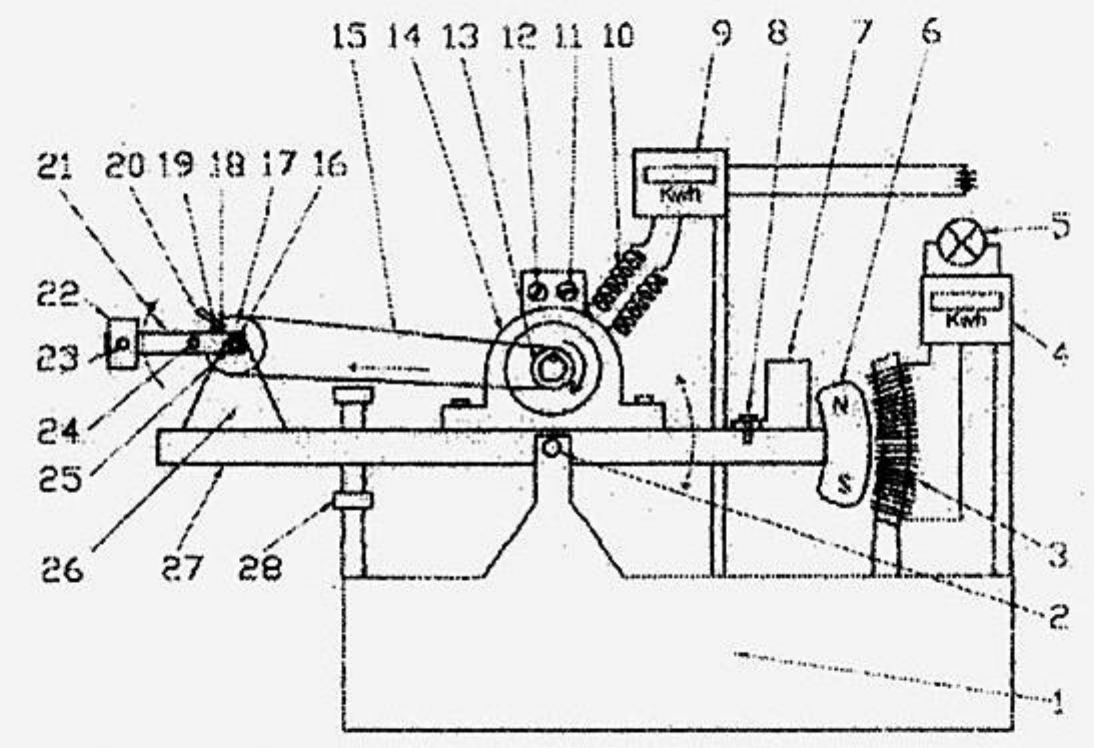

Abstract --- Machine for producing energy from gravitational force with efficiency measuring instruments comprises of a foundation (1) whereon over a spindle (2) is set a double arm lever (27), the oscillation amplitude of which is limited by a position arrester (28). On the double arm lever (27) is on one side hanging a pendulum (21) with a weight (22), and on the other side a permanent magnet (6) opposite to which on the foundation (1) is fixed an induction coil (3). Pendulum (21) is hung on one side of the double lever arm (27) over the bearings (25) that are drawn over the pine (16) that is firmly fixed near the top of the carrier (26). On the pendulum (21) laterally fixed is a roller (24), and on its loose end a weight (22) position of which in relation to pivot axis is adjustable by a screwed bolt (23). On the same spindle (16) over the bearing (29) is set a pulley (17). The distance from the loose top of lever (20) and roller 924) from the spindle axis (16) is equal. He pulley 917) over the belt (15) is coupled to a pulley 913) at an electric motor (14) that is fixed in the middle of the double arm axis (27) and to which an electric energy consumption measuring instrument (9), a regulator for continual change of number of revolutions (11) and a timer 912) of programmed time for the temporary switch on of the electric motor (14) are connected. On the opposite side of the double arm lover (27) is set the weight (7), position of which is adjustable by means of the screwed bolt (8) On the same side the permanent magnet (6) is set, opposite to which is on the foundation (1) fixed an induction coil (3) with consumer (5) and an instrument (4) for measuring the quantity of produced energy.

(23) P-390/04 -- Device for Studying Inertial Forces

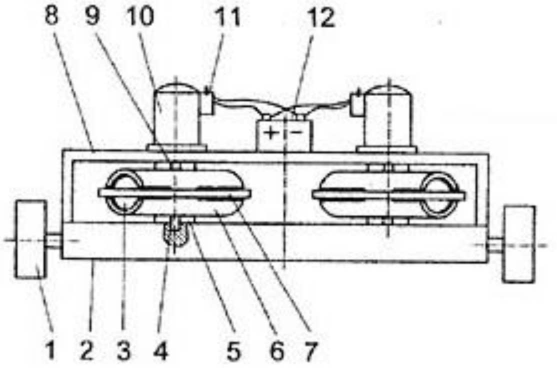

Abstract --- Device for studying inertial forces, consists of a platform (2) whereon are laterally set wheels (1). On the platform (2) from the top transversely and firmly set is a frame (8) onto which are from the top fixed a cell (12) and symmetrically two electric motors (10) with regulators (11) for adjusting number of revolvements. On the shafts (9) of the electric motor (10) are fixed the pipes (6) that are from the bottom side in the same axis by means of the pins (4) set in the platform (2). Thus the pipes (5) may revolve in horizontal plane. The pipes (6) are separated along the middle, and in them from both sides the globes (3) diameter of which is shorter than the internal diameter of the pipe (6). On the platform (2) by means of the screws (13) are fixed the holders (5) whereon are firmly fixed the rings (7) that go through horizontal cross-sections set on both sides of the pipe (6), where adjusting of the distance of the center among the rings (7) is allowed in relation to the axis of the electric motor 910), i.e., center of rotation of the pipe (6). Along with the idea of the invention, by means of a regulator 11, it is possible to changed the speed and directions of rotation of the pipe (6) and by the screw (13) to alter the size of rotation excentre of the globes (3) in relation to the center of rotation of the pipe (6), as the path of the globes (3) is defined by the internal circumference of the ring (7). As the size of the centrifugal force of the globes (6) depends on the radius of rotation and speed of angle, thus it is allowed to adjust the speed and direction of motion of the wheels.

http://www.veljkomilkovic.com/Images/Misljenje%205.JPG

Opinion of Prof. Dr. Velimir Abramovic
Subject: Double Oscillator Invented by Veljko Milkovic
Time Institute --- Foundation for the Science of Time Dordtselaan 137a; 3081 BL Rotterdam: Halandija
Belgrade (20 June 2002)

I happen to have visited inventor Veljko Milkovic in Novi Sad and gained insight into his original and useful work on double mechanical oscillator.

It is a lever with a pendulum at one end, a mechanical machine using a principle that no mechanic before Milkovic, including Archimedes, thought of.

In addition to obvious practical application, with the system output several times larger than the input force, double oscillator has important theoretical characteristics:
(1) When the pendulum is out of balance it becomes a system without inertia, which uses gravity to oscillate and turns it into rotation through the lever.

(2) Obstructions on the lever do not influence the pendulum, which means that the pendulum is independent from the lever, but the opposite is not the case. In other words, gravity is the reason for mechanics. It is a reversible gravitational-mechanical process which turns gravity into mechanical work and vice versa, an obvious process in nature. The sum of gravity forces is always larger than the sum of losses: which is the precondition for constant movement of heavenly bodies.

(3) The double oscillator is also the best mechanical analogy of the alternating current, even better than Tesla’s analogy.

A model has been set up in Mr. Milkovic’s apartment: a water pump that needs only a slight pressure with one finger to put the pendulum out of balance and add impulses with a minor force. The output is enormous compared to the input force of pumping. Practical advantages are obvious.

Anti-Gravity Motor

It is very strange, but it turned out that the same invention fulfils two ancient human dreams. One about a machine which works continuously, and the other about the flying device which moves according to the wish of the person on the device. Here, of course we do not mean airplanes and rockets, but a flying machine that does not use any kind of fuel. A vehicle with such a motor could move on the ground, in the air or anywhere in space, without fuel.

Anti-gravitational motor is machine that confronts so-called "laws of nature". This idea could not have been believed in, without being pronounced naive or demented. Anti-gravitational motor belong to the field of science-fiction, although contemporary physics knows the case where a law of action and reaction does not apply in one inertial system.

This is the magnetic force which is emanated by two particles as they move.

Picture 1 --- A cart with one pendulum askew

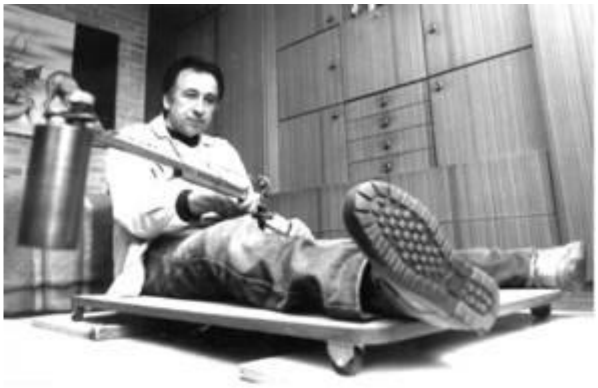

I

nconsistency is frequent in physics. Besides, mechanics is somehow outdated, and left to technicians and mathematicians. These three disciplines do not have the same basis, and they are more inconsistent than it is usually recognized. Physics explores occurrences and events in nature, independent of their meaning to humans, whilst technique deals with the possibility to join these occurrences in one whole. Mathematics precisely defines conditions under which these occurrences happen, but does not, and can not, consider the meaning of these occurrences, which is an integral part of physics. Mathematics also can not express practical purpose of an occurrence, which techniques can. Therefore, these three disciplines, in spite of having things in common, can not merge into one another. Physics basically abandoned the field of mechanics, as if it has nothing more to say.

Classical physics is, in large part, Newton's physics, and he was more of a mathematician than a physician. Maybe that is one of the reasons why there is a span of several centuries between the discoveries of Galilei and perpetuum mobile, and even an anti-gravitational motor. Physics is relying too much on quantification of physical constants that are part of a certain occurrence, while, at the same time, it ouches the qualification of these same occurrences to the side.

As far as technique is concerned, it prospered immensely, especially in the 20th century. On the other side, it is well known that new discoveries are usually technically very simple. For example, from a technical point of view, Milkovi?'s cart shown in Picture 2. looks more like a toy than an attempt to make an anti-gravitational motor. When you look at it from the physics point of view, it looks completely different.

Picture 2 --- Small cart with a pendulum askew

This cart contains everything an anti-gravitational motor needs. As with other models made by Milkovi?, there is an inertial force pushing them in one direction. The main part of the model is a physical pendulum which is askew and is moved by gravity. Gravitational field should be replaced with a magnetic field, to enhance the efficiency of the model. Milkovi? made a model with two askew pendulums, which oscillate with phases positioned towards one another in an angle of 180°.

Picture 3 --- A cart with two pendulums askew

Perpetuum mobile and an anti-gravitational motor have been hiding in the shadows of scientific thought for along time. That shadow certainly contains many similar "scraps", awaiting future exploration.

MATHEMATICAL ANALYSIS(Excerpt)
by Prof. Bratislav Tosic
(http://www.veljkomilikov.com/Images/Mislhenhe3.JPG)

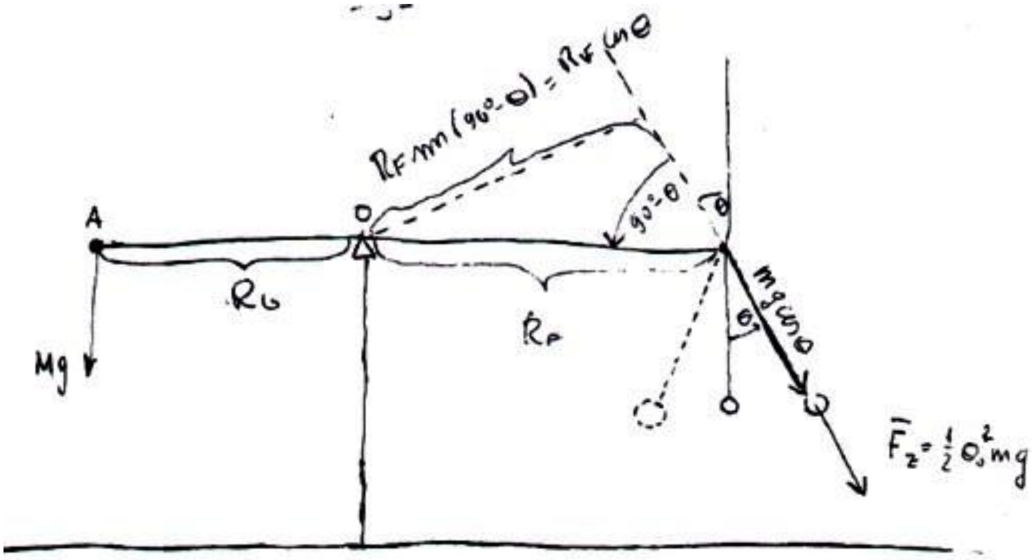

$$\ddot{\alpha} = -\frac{g}{R_F} + \frac{g}{R_F}\frac{M}{m}\frac{R_G}{R_F} - \frac{g}{R_F} - \frac{\Theta_0^2}{2}\frac{g}{R_F} + \frac{g}{R_F}\Theta^2 + \frac{1}{2}\Theta_0^2\frac{g}{R_F}\cdot\frac{1}{2}\Theta^2$$

$$\ddot{\alpha} = \frac{g}{R_F}\left(1 + \frac{1}{4}\Theta_0^2\right)\Theta^2 - \frac{g}{R_F}\left(2 + \frac{\Theta_0^2}{2} - \frac{M}{m}\frac{R_G}{R_F}\right) \quad \ldots\ldots (20)$$

Complete Mathematical Analysis of Biphase Oscillator (9 pages):
http://www.veljkomilikov.com/Images/Misljenje%204%20-%20Mathematicka%analiza%20-%20Tosic.pdf

Anders Heerfordt aus Rodovre/DK und Stefan Hartmann aus Berlin/De haben noch auf folgende nützliche Links zu Milkovic's Erfindungen hingewiesen:

http://en.wikipedia.org/wiki/Veljko_Milkovi%C4%87
http://www.overunity.com/index.php/topic,1763.0.html

Übrigens habe ich den Eindruck, daß die Resonanzeffekte, die der serbische Erfinder ausnutzt, auch bei anderen Phänomenen eine Rolle spielen. So hatte ich z.B. im Artikel "Motor-Generator-Kombinationen im Resonanzbetrieb", siehe http://www.borderlands.de/net_pdf/NET0904S31-33,

Die Don-Martin-Maschine hat dann am bestens - oder erst richtig - funktioniert, wenn Don Martin - der Musiker ist - die Anlage so "abgestimmt" hat, daß sie richtig schwingt. Er hat dabei den Pully des Generators in einer Art federnder Aufhängung so an den Reifen des Schwungrades angekoppelt, daß sich offenbar im laufenden Betrieb eine schwingende Ankopplung ergab.

Ähnliches scheint ja Milkovic in seiner Patentanmeldung:

18) MP-100/02 --- Generator of Electrical Energy Driven by an Electric Motor, Gravitational and Centrifugal Force

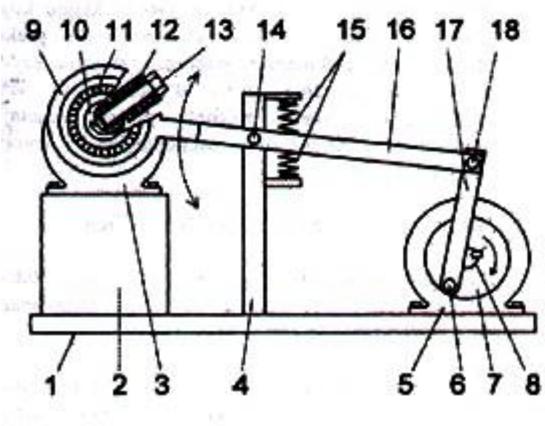

dargestellt zu haben.

Auch Prof. F.R. Popescu hatte ja einen Resonanzrotor mit parametrischer Zwangserregung konzipiert, wo sich in einem rotierenden Schwungrad radiale Kolben in bestimmter Synchronisation bewegten, so daß eine Leistungsziffer von über 100% erzielt werden konnte.

Der Inertialo-Elektro-Drehmotor funktionierte nach bestimmten Gesetzen der Nichtlinearen Mechanik und soll in der Lage sein, Energie aus der Umgebung zu absorbieren und in nutzbare kinetische Energie umzuwandeln. Prof. Popescu bezeichnete sein System als "offenes" System, wie dies vielleicht auch bei den Energiewandlern von Felix Würth der Fall ist, s. a. http://www.borderlands.de/net_pdf/NET0904S25-30. s.S. 28

Das über Schwungradsysteme - ähnlich wie bei gekoppelten Pendeln - Energie eingekoppelt werden kann, wurde beschrieben unter: http://www.borderlands.de/net_pdf/NET0105S12.

V.) Teil Druckluftanwendungen

Motorantrieb mit Druckluft

4,292,804; *Rogers,* Sr.; October 6, 1981;

Method and apparatus for operating an engine on compressed gas
Abstract

The present invention relates to a method and apparatus for operating an engine having a cylinder and a piston reciprocals therein on compressed gas. The apparatus comprises a source of compressed gas connected to a distributor which distributes the compressed gas to the cylinder. A valve is provided to selectively admit compressed gas to the cylinder when the piston is in an approximately top dead center position. In one embodiment of the present invention the timing of the opening of the valve is advanced such that the compressed gas is admitted to the cylinder progressively further before the top dead center position of the piston as the speed of the engine increases. In a further embodiment of the present invention a valve actuator is provided which increases the length of time over which the valve remains open to admit compressed gas to the cylinder as the speed of the engine increases. A still further embodiment of the present invention relates to an apparatus for adapting a conventional internal combustion engine for operation on compressed gas.

BACKGROUND AND SUMMARY OF THE PRESENT INVENTION

The present invention relates to a method and apparatus for operating an engine using a compressed gas as the motive fluid. More particularly, the present invention relates to a apparatus for adapting a pre-existing internal combustion engine for operation on a compressed gas.

Air pollution is one of the most serious problems facing the world today. One of the major contributors to air pollution is ordinary internal combustion engine which are used in most motor vehicles today. Various devices, including many items mandated by legislation, have been proposed in an attempt to limit the pollutants which an internal combustion engine exhausts to the air. However, most of these devices have met with limited success and are often both prohibitively expensive and complex. A clean alternative to the internal combustion engine is needed to power vehicles and other machinery.

A compressed gas, preferably air, would provide an ideal motive fluid for a engine since it would eliminate the usual pollutants exhausted from an internal combustion engine. An apparatus for converting an internal combustion engine for operation on compressed air is disclosed in U.S. Pat. No. 3,885,387 issued May 27, 1975 to Simington. The Simington patent discloses an apparatus including a source of compressed air and a rotating valve actuator which opens and closes a plurality of mechanical poppet valves. The valves deliver compressed air in timed sequence to the cylinders of an engine through adapters located in the spark plug holes. However, the output speed of an engine of this type is limited by the speed of the mechanical valves and the fact that the length of time over which each of the valves remains open cannot be varied as the speed of the engine increases.

Another apparatus for converting an internal combustion engine for operation on steam or compressed air is disclosed in U.S. Pat. No. 4,102,130 issued July 25, 1978 to Stricklin. The Stricklin patent discloses a device which changes the valve timing of a conventional four stroke engine such that the intake and exhaust valves open once for every revolution of the engine instead of once every other revolution of the engine. A reversing valve is provided which delivers live steam or compressed air to the intake valves and is subsequently reversed to allow the exhaust valves to deliver the expanded steam or air to the atmosphere. A reversing valve of this type however does not provide a reliable apparatus for varying the amount of motive fluid injected into the cylinders when it is desired to increase the speed of the engine. Further, a device of the type disclosed in the Stricklin patent requires the use of multiple reversing valves if the cylinders in a multi-cylinder engine were to be fired sequentially.

Therefore, it is an object of the present invention to provide a reliable method and apparatus for operating an engine or converting an engine for operation with a compressed gas.

A further object of the present invention is to provide a method and apparatus which is effective to deliver a constantly increasing amount of compressed gas to an engine as the speed of the engine increases. A still further object of the present invention is to provide a method and apparatus which will operate an engine using compressed gas at a speed sufficient to drive a conventional automobile at highway speeds.

It is still a further object of the present invention to provide a method and apparatus which is readily adaptable to a standard internal combustion engine to convert the internal combustion engine for operation with a compressed gas.

Another object of the invention is to provide a method and apparatus which utilizes cool expanded gas, exhausted from a compressed gas engine, to operate an air conditioning unit and/or an oil cooler.

These and other objects are realized by a method and apparatus according to the present invention for operating an engine having at least one cylinder and a reciprocating piston therein using compressed gas as a motive fluid. The apparatus includes a source of compressed gas and a distributor connected with the source of the compressed gas for distributing the compressed gas to the at least one cylinder. A valve is provided for admitting the compressed gas to the cylinder when the piston is in approximately a top dead center position within the cylinder. An exhaust is provided for exhausting the expanded gas from the cylinder as the piston returns to approximately the top dead center position.

In a preferred embodiment of the present invention a device is provided for varying the duration of each engine cycle over which the valve remains open to admit compressed gas to the cylinder dependent upon the speed of the engine. In a further preferred embodiment of the present invention, an apparatus for advancing the timing of the opening of the valve is arranged to admit the compressed gas to the cylinder progressively further before the top dead center position of the piston as the speed of the engine increases.

Further features of the present invention include a valve for controlling the amount of compressed gas admitted to the distributor. Also, a portion of the gas which has been expanded in the cylinder and exhausted through the exhaust valve is delivered to a compressor to be recompressed and returned to the source of compressed gas. A gear train is selectively engageable to drive the compressor at different operating speed depending upon the pressure maintained at the source of compressed air and/or the speed of the engine. Still further, a second portion of the exhaust gas is used to cool a lubricating fluid for the engine or to operate an air conditioning unit.

In a preferred embodiment of the present invention, the valve for admitting compressed gas to the cylinder is electrically actuated. The device for varying the duration of each engine cycle over which the intake valve remains open as the speed of the engine increase comprises a rotating element whose effective length increases as the speed of the engine increases such that a first contact on the rotating element is electrically connected to a second contact for a longer period of each engine cycle. The second contact actuates the valve whereby the valve remains in an open position for a longer period of each engine cycle as the speed of the engine increases.

Still further features of the present invention include an adaptor plate for supporting the distributor above an intake manifold of a conventional internal combustion engine after a carburetor has been removed to allow air to enter the cylinders of the engine through the intake manifold and conventional intake valves. Another adaptor plate is arranged over an exhaust passageway of the internal combustion engine to reduce the cross-sectional area of the exhaust passageway.

BRIEF DESCRIPTION OF THE DRAWINGS

Preferred embodiments of a method and apparatus for operating an engine according to the present invention will be described with reference to the accompanying drawings wherein like members bear like reference numerals and wherein:

FIG. 1 is a schematic representation of an apparatus according to the present invention arranged on an engine;

FIG. 2 is a side view of one embodiment of a valve actuator according to the present invention;

FIG. 3 is a cross-sectional view taken along the line 3--3 in FIG. 2;

FIG. 4 is a cross-sectional view of a second embodiment of a valve actuator according to the present invention;

FIG. 5 is a view taken along the line 5--5 in FIG. 4;

FIG. 6 is a cross-sectional view of a third embodiment of a valve actuator according to the present invention;

FIG. 7 is a view taken along the line 7--7 in FIG. 6;

FIG. 8 is a cross-sectional view of a gearing unit to drive a compressor according to the present invention.

DETAILED DESCRIPTION OF THE PREFERRED EMBODIMENTS

With reference to FIG. 1, an engine block 21 (shown in phantom) having two banks of cylinders with each bank including cylinders 20 having pistons 22 reciprocals therein (only one of which is shown in phantom) in a conventional manner. While the illustrated engine is a V-8 engine, it will be apparent that the present invention is applicable to an engine having any number of pistons and cylinders with the V-8 engine being utilized for illustration purposes only. A compressed gas tank 23 is provided to store a compressed gas at high pressure. It may also be desirable to include a small electric or gas compressor to provide compressed gas to supplement the compressed gas held in the tank 23. In a preferred embodiment, the compressed gas is air which can be obtained from any suitable source.

A line 25 transports the gas withdrawn from the tank 23 when a conventional shut off valve 27 is open. In addition, a solenoid valve 29 preferably operated by a suitable key operated switch (not shown) for the engine is also arranged in the line 25. In normal operation, the valve 27 is maintained open at all times with the solenoid valve 29 operating as a selective shut off valve to start and stop the engine 21 of the present invention.

A suitable regulating valve 31 is arranged downstream from the solenoid valve 29 and is connected by a linkage 33 to a throttle linkage 35 which is operator actuated by any suitable apparatus such as a foot pedal (not shown). The line 25 enters an end of a distributor 33 and is connected to an end of a pipe 35 which is closed at the other end. A plurality of holes, which are equal to the number of cylinders in the engine 21, are provided on either side of the pipe 35 along the length of the pipe 35.

When the present invention is used to adapt a conventional internal combustion engine for operation on compressed gas, an adaptor plate 36 is provided to support the distributor 33 in spaced relation from the usual intake opening in the intake manifold of the engine after a conventional carburetor has been removed. In this way, air is permitted to enter the internal combustion engine through the usual passageways and to be admitted to the cylinders through suitable intake valves (not shown). The adaptor plate 36 is secured to the engine block 21 and the distributor 33 by any suitable apparatus, e.g., bolts.

Each of the holes in the pipe 35 is connected in fluid-tight manner to a single line 37. Each line 37 carries the compressed gas to a single cylinder 20. In a preferred embodiment, each of the lines 37 is 1/2 inch high pressure plastic tubing attached through suitable connectors to the distributor 33 and the pipe 35. Each of the lines 37 is connected to a valve 39 which is secured in an opening provided near the top of each of the cylinders 20. In the case of a conversion of a standard internal combustion engine, the valves 39 can be conveniently screwed into a tapped hole in the cylinder 20 typically provided for a spark plug of the internal combustion engine. In a preferred embodiment, the valves 39 are solenoid actuated valves in order to provide a fast and reliable opening and closing of the valves 39.

Each of the valves 39 is energized by a valve actuator 41 through one of a plurality of wires 43. The valve actuator 41 is driven by a shaft of the engine similar to the drive for a conventional distributor of an internal combustion engine. That is, a shaft 55 of the valve actuator 41 is driven in synchronism with the engine 21 at one half the speed of the engine 21.

A first embodiment of the valve actuator 41 (FIGS. 2 and 3) receives electrical power through a wire 45 which is energized in a suitable manner by a battery, and a coil if necessary (not shown) as is conventional in an internal combustion engine. The wire 45 is attached to a central post 47 by a nut 49. The post 47 is connected to a conducting plate 51 arranged within a housing 53 for the valve actuator 41. Within the housing 53, the shaft 55 has an insulating element 57 secured to an end of the shaft 55 for co-rotation therewith when the shaft 55 is driven by the engine 21. A first end of a flexible contact 59 is continuously biased against the conducting plate 51 to receive electricity from the battery or another suitable source. A second end of the contact 59 is connected to a conducting sleeve 60 which is in constant contact with a spring biased contact 61 which is arranged within the sleeve 60. The contact 61 is biased by a spring 63 which urges the contact 61 towards a side wall of the housing 53.

With reference to FIG. 3, a plurality of contacts 65 are spaced from one another and are arranged around the periphery of the housing 53 at the same level as the spring biased contact 61. Each contact 65 is electrically connected to a post 67 which extends outside of the housing 53. The number of contacts 65 is equal to the number of cylinders in the engine 21. One of the wires 43, which actuate the valves 39, is secured to each of the posts 67.

In operation, as the shaft 55 rotates in synchronism with the engine 21, the insulating element 57 rotates and electricity is ultimately delivered to successive ones of the contacts 65 and wires 43 through the spring biased contact 61 and the flexible contact 59. In this way, each of the electrical valves 39 is actuated and opened in the proper timed sequence to admit compressed gas to each of the cylinders 20 to drive the pistons 22 therein on a downward stroke.

The embodiment illustrated in FIGS. 2 and 3 is effective to actuate each of the valves 39 to remain open for a long enough period of time to admit sufficient compressed gas to each of the cylinders 20 of the engine 21 to drive the engine 21. The length of each of the contacts 65 around the periphery of the housing 53 is sufficient to permit the speed of the engine to be increased when desired by the operator by moving the throttle linkage 35 which actuates the linkage 33 to further open the regulating valve 31 to admit more compressed gas from the tank 23 to the distributor 33. However, it has been found that the amount of air admitted by the valves 39 when using the first embodiment of the valve actuator 41 (FIGS. 2 and 3) is substantially more than required to operate the engine 21 at an idling speed. Therefore, it may be desirable to provide a valve actuator 41 which is capable of varying the duration of each engine cycle over which the solenoid valves 39 are actuated, i.e., remain open to admit compressed gas, as the speed of the engine 21 is varied.

A second embodiment of a valve actuator 41 which is capable of varying the duration of each engine cycle over which each of the valves 39 remains open to admit compressed gas to the cylinders 20 dependent upon the speed of the engine 21 will be described with reference to FIGS. 4 and 5 wherein members corresponding to those of FIGS. 2 and 3 bear like reference numerals. The wire 45 from the electrical source is secured to the post 47 by the nut 49. The post 47 has a annular contact ring 69 electrically connected to an end of the post 47 and arranged within the housing 53. The shaft 55 rotates at one half the speed of the engine as in the embodiment of FIGS. 2 and 3.

At an upper end of the shaft 55, a splined section 71 slidably receives an insulating member 73. The splined section 71 of the shaft 55 positively holds the insulating member 73 for co-rotation therewith but permits the insulating member 73 to slide axially along the length of the splined section 71. Near the shaft 55, a conductive sleeve 72 is arranged in a bore 81 in an upper surface of the insulating element 73 generally parallel to the splined section 71. A contact 75, biased towards the annular contact ring 69 by a spring 77, is arranged within the conductive sleeve 72 in contact therewith. The conductive sleeve 72 also contacts a conductor 79 at a base of the bore 81.

The conductor 79 extends to the upper surface of the insulating element 73 near an outer periphery of the insulating element 73 where the conductor 79 is electrically connected to a flexible contact 83. The flexible contact 83 selectively engages a plurality of radial contacts 85 arranged on an upper inside surface of the housing 53. A weak spring 87 arranged around the splined section 71 engages a stop member 89 secured on the shaft 55 and the insulating element 73 to slightly bias the insulating element 73 towards the upper inside surface of the housing 53 to ensure contact between the flexible contact 83 and the upper inside surface of the housing 53. As best seen in FIG. 5, the radial contacts 85 on the upper inside surface of the housing 53 are arranged generally in the form of radial spokes extending from the center of the housing 53 with the number of contacts being equal to the number of cylinders 20 in the engine 21. The number of degrees covered by each of the radial contacts 85 gradually increases as the distance from the center of the upper inside surface of the housing 53 increases.

In operation of the device of FIGS. 4 and 5, as the shaft 55 rotates, electricity flows along a path through the wire 45 down through post 47 to the annular contact member 69 which is in constant contact with the spring biased contact 75. The electrical current passes through the conductive sleeve 72 to the conductor 79 and then to the flexible contact 83. As the flexible contact 83 rotates along with the insulating member 73 and the shaft 55, the tip of the flexible contact 83 successively engages each of the radial contacts 85 on the upper inside of the housing 53. As the speed of the shaft 55 increases, the insulating member 73 and the flexible contact 83 attached thereto move upwardly along the splined section 71 of the shaft 55 due to the radial component of the splines in the direction of rotation under the influence of centrifugal force. As the insulating member 73 moves upwardly, the flexible contact 83 is bent such that the tip of the contact 83 extends further radially outwardly from the center of the housing 53 (as seen in phantom lines in FIG. 4). In other words, the effective length of the flexible contact 83 increases as the speed of the engine 21 increases.

As the flexible contact 83 is bent and the tip of the contact 83 moves outwardly, the tip remains in contact with each of the radial contacts 85 for a longer period of each engine cycle due to the increased angular width of the radial contacts with increasing distance from the center of the housing 53. In this way, the length of time over which each of the valves 39 remains open is increased as the speed of the engine is increased. Thus, a larger quantity of compressed gas or air is injected into the cylinders as the speed increases. Conversely, as the speed decreases and the insulating member 73 moves downwardly along the splined section 71, a minimum quantity of air is injected into the cylinder due to the shorter length of the individual radial contact 85 which is in contact with the flexible contact 83. In this way, the amount of compressed gas that is used during idling of the engine 21 is at a minimum whereas the amount of compressed gas which is required to increase the speed of the engine 21 to a level suitable to drive a vehicle on a highway is readily available.

With reference to FIGS. 6 and 7, a third embodiment of a valve actuator 41 according to the present invention includes an arcuate insulating element 91 having a first end pivotally secured by any suitable device such as screw 92 to the shaft 55 for co-rotation with the shaft 55. The screw 92 is screwed into a tapped hole in the insulating element 91 such that a tab 94 at an end of the screw 92 engages a groove 96 provided in the shaft 55. In this way, the insulating element 91 positively rotates with the shaft 55. However, as the shaft 55 rotates faster, a second end 98 of the insulating element 91 is permitted to pivot outwardly under the influence of centrifugal force because of the groove 96 provided in the shaft 55. A spring 93 connected between the second end 98 of the element 91 and the shaft 55 urges the second end of the element 91 towards the center of the housing 53.

A contact 99 similar to the contact 59 (FIG. 2) is arranged such that one end of the contact 99 is in constant contact with the conducting plate 51 located centrally within the housing 53. The other end of the contact 99 engages a conductive sleeve 101 arranged in bore 102. A contact element 95 is arranged in the conductive sleeve 101 in constant contact with the sleeve 101. The bore 102 is arranged generally parallel to the shaft 55 near the second end of the arcuate insulating element 91. The contact 95 is biased by a spring 97 towards the upper inside surface of the housing 53 for selective contact with each of the plurality of radial contacts 85 which increase in arc length towards the outer peripheral surface of the housing 53 (FIG. 6).

In operation of the device of FIGS. 6 and 7, as the shaft 55 rotates the arcuate insulating element 91 rotates with the shaft 55 and the second end 98 of the insulating element 91 tends to pivot about the shaft 55 due to centrifugal force. Thus, as the effective length of the contact 95 increases, i.e., as the arcuate insulating element 91 pivots further outwardly, the number of degrees of rotation over which the contact 95 is in contact with each of the radial contacts 85 on the upper inside surface of the housing 53 increases thereby permitting each of the valves 39 to remain open for a longer period of each engine cycle to admit more compressed gas to the respective cylinder 20 to further increase the speed of the engine 21.

With reference to FIG. 1, a mechanical advance linkage 104 which is connected to the throttle linkage 35, advances the initiation of the opening of each valve 39 such that compressed gas is injected into the respective cylinder further before the piston 22 in the respective cylinder 20 reaches a top dead center position as the speed of the engine is increased by moving the throttle linkage 35. The advance linkage 104 is similar to a conventional standard mechanical advance employed on an internal combustion engine. In other words, the linkage 104 varies the relationship between the angular positions of a point on the shaft 55 and a point on the housing 53 containing the contacts. Alternatively, a conventional vacuum advance could also be employed. By advancing the timing of the opening of the valves 39, the speed of the engine can more easily be increased.

The operation of the engine cycle according to the present invention will now be described. The compressed gas injected into each cylinder of the engine 21 drives the respective piston 22 downward to drive a conventional crankshaft (not shown). The movement of the piston downwardly causes the compressed gas to expand rapidly and cool. As the piston 22 begins to move upwardly in the cylinder 20 a suitable exhaust valve (not shown) arranged to close an exhaust passageway is opened by any suitable apparatus. The expanded gas is then expelled through the exhaust passageway. As the piston 22 again begins to move downwardly a suitable intake valve opens to admit ambient air to the cylinder. The intake valve closes and the ambient air is compressed on the subsequent upward movement of the piston until the piston reaches approximately the top dead center position at which time the compressed gas is again injected into the cylinder 20 to drive the piston 22 downward and the cycle begins anew.

In the case of adapting a conventional internal combustion engine for operation on compressed gas, a plurality of plates 103 are preferably arranged over an end of the exhaust passageways in order to reduce the outlet size of the exhaust passageways of the conventional internal combustion engine. In the illustrated embodiment, a single plate having an opening in the center is bolted to the outside exhaust passageway on each bank of the V-8 engine while another single plate having two openings therein is arranged with one opening over each of the interior exhaust passageways on each bank of the V-8 engine. A line 105 is suitably attached to each of the adaptor places to carry the exhaust to an appropriate location. In a preferred embodiment, the exhaust lines 105 are 11/2" plastic tubing.

In a preferred embodiment, the exhaust lines 105 of one bank of the V-8 engine are collected in a line 107 and fed to an inlet of a compressor 109. The pressure of the exhaust gas emanating from the engine 21 according to the present invention is approximately 25 p.s.i. In this way, the compressor 109 does not have to pull the exhaust into the compressor since the gas exhausted from the engine 21 is at a positive pressure. The positive pressure of the incoming fluid increases the efficiency and reduces wear on the compressor 109. The exhaust gas is compressed in the compressor 109 and returned through a line 111 and a check valve 113 to the compressed gas storage tank 23. The check valve 113 prevents the flow of compressed gas stored in the tank 23 back towards the compressor 109.

A suitable pressure sensor 115 is arranged at an upper end of the tank 23 and sends a signal along a line 117 when the pressure exceeds a predetermined level and when the pressure drops below a predetermined level. The line 117 controls an electrically actuated clutch 119 disposed at a front end of the compressor 109. The clutch 119 is operative to engage and disengage the compressor 109 from a drive pulley 121. Also, the signal carried by the line 117 actuates a suitable valve 123 arranged on a compressor housing 125 to exhaust the air entering the compressor housing 125 from the line 107 when the clutch 119 has disengaged the compressor 109 from the drive pully 121.

n a preferred embodiment, when the pressure is the tank 23 reaches approximately 600 p.s.i., the clutch 119 is disengaged and the compressor 109 is deactivated and the valve 123 is opened to exhaust the expanded gas delivered to the compressor 109 from the line 107 to the atmosphere. When the pressure within the tank 23 drops below approximately 500 p.s.i., the sensor 115 sends a signal to engage the clutch 119 and close the valve 123, thereby operating the compressor 109 for supplying the tank 23 with compressed gas.

The pulley 121 which drives the compressor 109 through the clutch 119 is driven by a belt 127 which is driven by a pulley 129 which operates through a gear box 131. With reference to FIGS. 1 and 8, a second pulley 133 on the gear box is driven by a belt 135 from a pulley 137 arranged on a drive shaft 139 of the engine 21. The pulley 137 drives a splined shaft 140 which has a first gear 141 and a second larger gear 143 arranged thereon for rotation with the splined shaft 140. The splined shaft 140 permits axial movement of the gears 141 and 143 along the shaft 140.

In normal operation (as seen in FIG. 8), the first gear 141 engages a third gear 145 arranged on a shaft 147 which drives the pulley 129. The shafts 140 and 147 are arranged in suitable bearings 149 arranged at each end thereof. When the speed of the engine 21 drops below a predetermined level, a suitable sensor 151 responsive to the speed of the drive shaft 139 of the engine 21 generates a signal which is transmitted through a line 153 to a solenoid actuator 155 arranged within the gear box 131. The solenoid actuator 155 moves the first and second gears 141, 143 axially along the splined shaft 140 to the right as seen in FIG. 8 such that the second, larger gear 143 engages a fourth smaller gear 157 which is arranged on the shaft 147. The ratio of the second gear 143 to the fourth gear 157 is preferably approximately 3 to 1.

In this way, when the speed of the engine 21 drops below the predetermined level as sensed by the sensor 151 (which predetermined level is insufficient to drive the compressor 109 at a speed sufficient to generate the 500-600 pounds of pressure which is preferably in the tank 23), the solenoid actuator 155 is energized to slide the gears 143, 141 axially along the splined shaft 140 so that the second, larger gear 143 engages the fourth, smaller gear 157 to drive the pulley 129 and hence the compressor 109 at a higher rate of speed to generate the desired pressure. When the speed of the engine increases above the predetermined level, in a preferred embodiment approximately 1500 rpm, the solenoid actuator 155 is deactivated by the sensor 151 thereby moving the gears 143 and 141 to the left as seen in FIG. 8 such that the first gear 141 re-engages with the third gear 145 to effectuate a 1 to 1 ratio between the output shaft 139 of the engine 21 and the pulley 129.

The other bank of the V-8 engine has its exhaust ports arranged with adapter plates 103 similar to those on the first bank. However, the exhaust from this bank of the engine 21 is not collected and circulated through the compressor 109. In a preferred embodiment, a portion of the exhaust is collected in a line 159 and fed to an enlarged chamber 161. A second fluid is fed through a line 163 into the chamber 161 to be cooled by the cool exhaust emanating from the engine 21 in the line 159. The second fluid in the line 163 may be either transmission fluid contained in a transmission associated with the engine 21 or a portion of the oil used to lubricate the engine 21. A second portion of the exhaust from the second bank of the V-8 engine is removed from the line 159 in a line 165 and used as a working fluid in an air conditioning system or for any other suitable use.

It should be noted that the particular arrangement utilized for collecting and distributing the gas exhausted from the engine 21 would be determined by the use for which the engine is employed. In other words, it may be advantageous to rearrange the exhaust tubing such that a larger or smaller percentage of the exhaust is routed through the compressor 109. It should also be noted that since the exhaust lines 105 are plastic tubing, a rearrangement of the lines for a different purpose is both simple and inexpensive.

In operation of the engine of the present invention, the engine 21 is started by energizing the solenoid valve 29 and any suitable starting device (not shown), e.g., a conventional electric starter as used on an internal combustion engine. Compressed gas from the full tank 23 flows through the line 25 and a variable amount of the compressed gas is admitted to the distributor 33 by controlling the regulator valve 31 through the linkage 33 and the operator actuated throttle linkage 35. The compressed gas is distributed to each of the lines 37 which lead to the individual cylinders 20. The compressed gas is admitted to each of the cylinders 20 in timed relationship to the position of the pistons within the cylinders by opening the valves 39 with the valve actuator 41.

When it is desired to increase the speed of the engine, the operator moves the throttle linkage 35 which simultaneously admits a larger quantity of compressed gas to the distributor 33 from the tank 23 by further opening the regulator valve 31. The timing of the valve actuator 41 is also advanced through the linkage 104. Still further, as the speed of the engine 21 increases, the effective length of the rotating contact 83 (FIG. 4) or 95 (FIG. 6) increases thereby electrically contacting a wider portion of one of the stationary radial contacts 85 to cause each of the valves 39 to remain open for a longer period of each engine cycle to admit a larger quantity of compressed gas to each of the cylinders 20.

As can be seen, the combination of the regulating valve 31, the mechanical advance 104, and the valve actuator 41, combine to produce a compressed gas engine which is quickly and efficiently adaptable to various operating speeds. However, all three of the controls need not be employed simultaneously. For example, the mechanical advance 104 could be utilized without the benefit of one of the varying valve actuators 41 but the high speed operation of the engine may not be as efficient. By increasing the duration of each engine cycle over which each of the valves 39 remains open to admit compressed gas to each of the cylinders 20 as the speed increases, conservation of compressed gas during low speed operation and efficient high speed operation are both possible.

After the compressed gas admitted to the cylinder 20 has forced the piston 22 downwardly within the cylinder to drive the shaft 139 of the engine, the piston 22 moves upwardly within the cylinder 20 and forces the expanded gas out through a suitable exhaust valve (not shown) through the adapter plate 103 (if employed) and into the exhaust line 105. The cool exhaust can then be collected in any suitable arrangement to be compressed and returned to the tank 23 or used for any desired purpose including use as a working fluid in an air conditioning system or as a coolant for oil.

When using the apparatus and method of the present invention to adapt a ordinary internal combustion engine for operation with compressed gas it can be seen that considerable savings in weight are achieved. For example, the ordinary cooling system including a radiator, fan, hoses, etc. can be eliminated since the compressed gas is cooled as it expands in the cylinder. In addition, there are no explosions within the cylinder to generate heat. Further reductions in weight are obtained by employing plastic tubing for the lines which carry the compressed gas between the distributor and the cylinders and for the exhaust lines. Once again, heavy tubing is not required since there is little or no heat generated by the engine of the present invention. In addition, the noise generated by an engine according to the present invention is considerably less than that generated by an ordinary internal combustion engine since there are no explosions taking place within the cylinders.

The principles of preferred embodiments of the present invention have been described in the foregoing specification. However, the invention which is intended to be protected is not to be construed as limited to the particular embodiments disclosed. The embodiments are to be regarded as illustrative rather than restrictive. Variations and changes may be made by others without departing from the spirit of the invention. Accordingly, it is expressly intended that all such variations and changes which fall within the spirit and the scope of the present invention as defined in the appended claims be embraced thereby.

Fig. 6

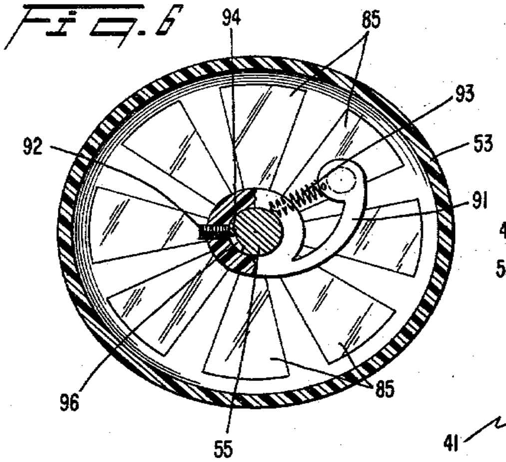

Fig. 7

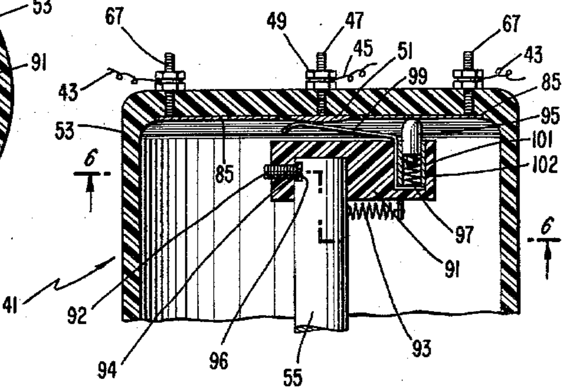

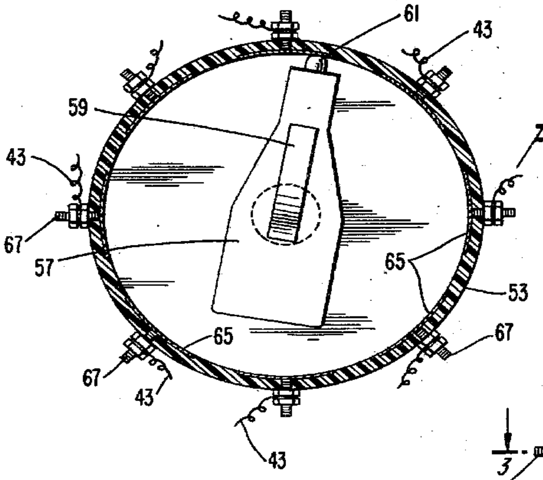

Fig. 3

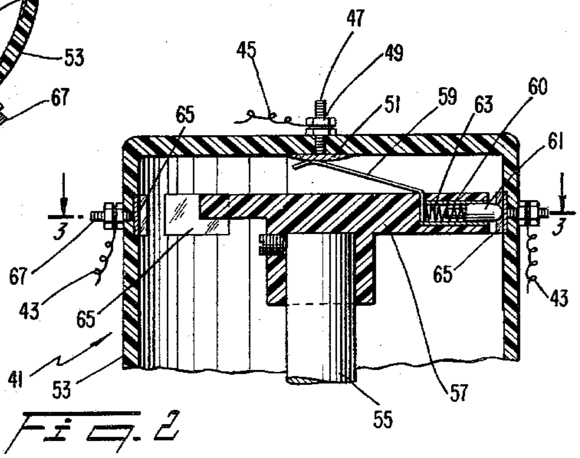

Fig. 2

FIG. 1

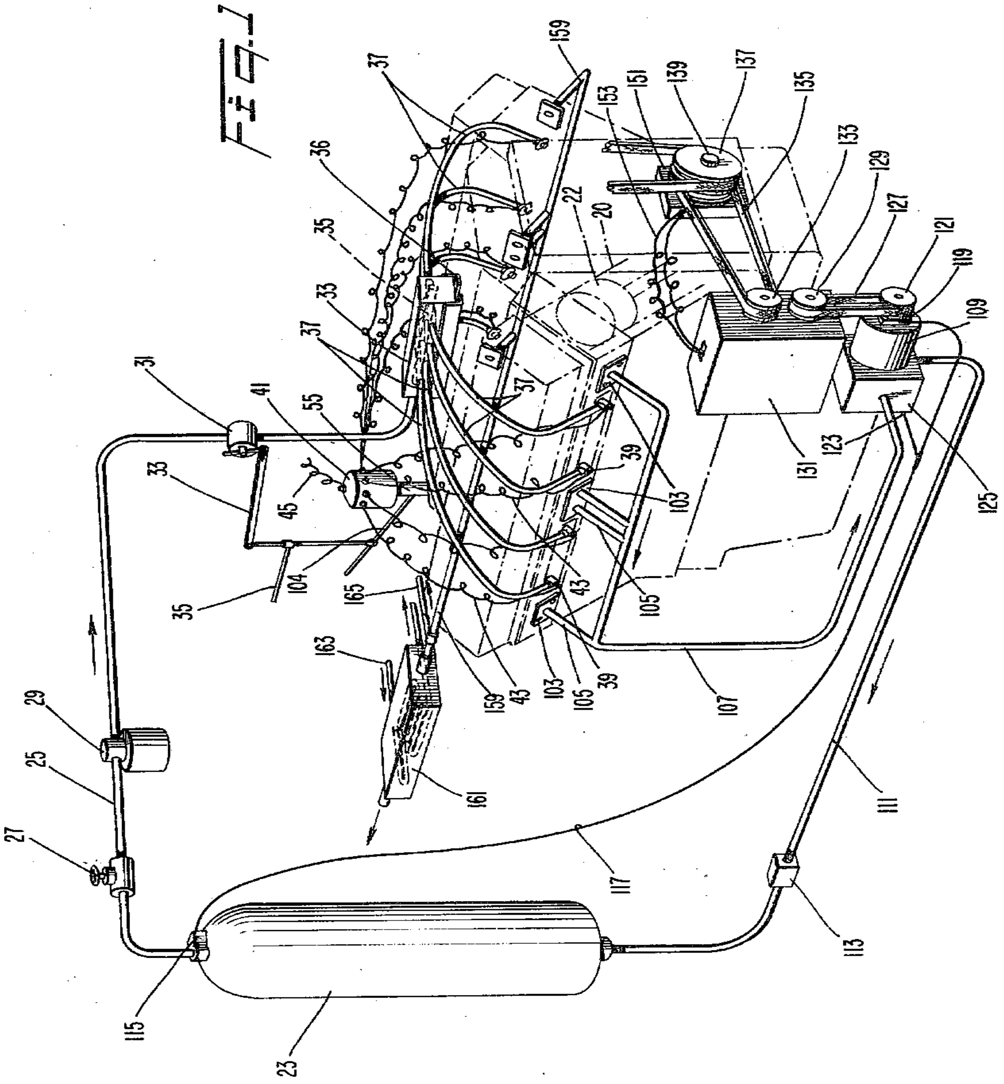
159
37
36
35
33
37
153
151
139
137
135
133
129
127
121
119
109
22
20
31
41
55
37
33
45
39
103
131
123
125
35
104
165
43
105
163
159
43
103
105
39
107
29
25
27
161
117
111
113
115
23

FIG. 5

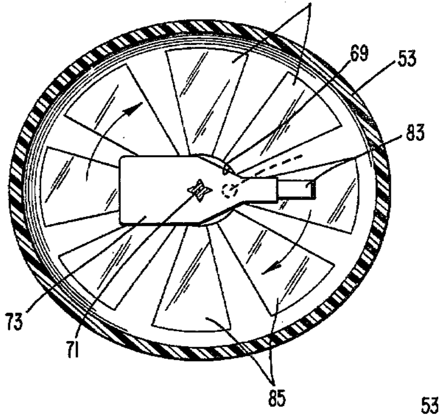

FIG. 4

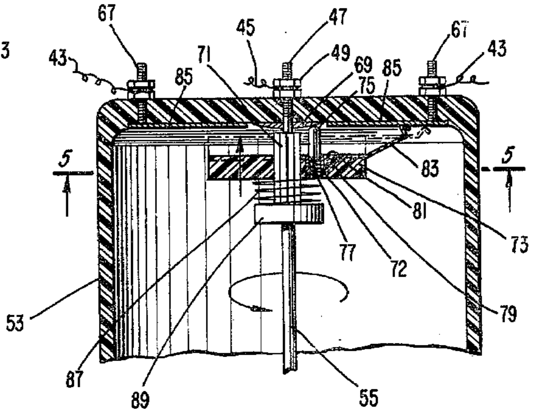

FIG. 6

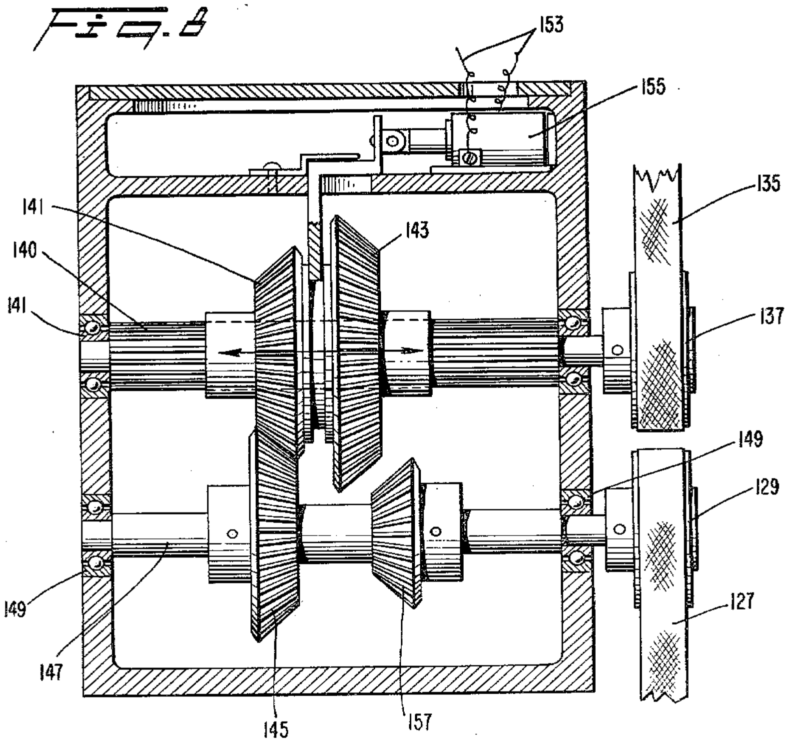

VI.) Teil Phänomene

Kugelblitze

Israelischen Wissenschaftlern ist es offenbar gelungen, Kugelblitze im Labor zu erzeugen. Und zwar mit Hilfe eines handelsüblichen Mikrowellenherdes mit 600 Watt Leistung.
Wie Vladimir Dikhtyar und Eli Jerby von der Tel Aviv University berichten, setzten sie dafür auch einen so genannten Mikrowellenbohrer ein, auf den Herr Jerby ein Patent besitzt.

Die Study "Fireball Ejection from a Molten Hot Spot to Air by localized Microwaves" von Vladimir Dikhtyar und Eli Jerby erschien in den "Physical Review Letters" (Band 96, 045002, 10.1103/PhysRevLett.96.045002).

Die Energiequelle von 600 Watt wurde einem herkömmlichen Mikrowellenherd, wie er auch in der Küche eingesetzt wird, entnommen. Mittels eines Rohres konzentrierten die beiden Physiker die Strahlungsenergie auf kleine Bereiche verschiedener Substrate wie etwa Silizium, Germanium, Glas, Keramik oder Basalt.

Schmolz das jeweilige Substrat, zogen die beiden die Spitze des Rohres zurück, woraufhin für den Bruchteil von Sekunden schwebende und teilweise sogar auf einer Oberfläche hüpfende Leuchterscheinungen in Form von kleinen Kugeln entstanden. So oder so ähnlich werden jedenfalls die seltenen Kugelblitze von Zeugen beschrieben.

VII.) Teil Die Patente Sammlung

Es ist eine Sammlung jener Patente die für sich im weitestem Sinne mit „Energie“ befassen.

Dank der nachstehenden Veröffentlichung nahezu aller relevanter US Patentnummern finden Sie hier nochmals ca. 37.000 Seiten Pateninformation.

Die nachfolgend angeführten Patente sind mir bekannt, das bedeutet nicht das sie vollständig angeführt wurden.

Wenn Sie der Volltext des jeweiligen Originalpatents interessiert, dann können Sie sich dieses unter **http://www.uspto.gov/patft/index.html** dadurch herunter laden, wenn Sie unter diesen Link die jeweils angeführte Patennummer eingeben.

7.0.0.0. Vorwort zur Patentsammlung

Jeden Leser dieser WEB Seite sollte klar sein, daß hinter jeder der Patente Darstellungen eine Vielzahl von Menschen (standen) stehen die mit ihren Untersuchungen, Gedankengut und Experimenten beste Arbeit geleistet haben. Viele dieser unorthodoxen Innovationen widersprechen unseren gewohnten physikalischen Verständnis. Der eine oder andere wird sagen: „das kann nicht sein“ meint aber damit nur, mit seinem persönlichen Wissen und/oder seiner Erfahrung ist das nicht in Einklang zu bringen.

Insbesondere Patentanmeldungen die die Gewinnung von Wasserstoff > Knallgas als Energieträger zum Inhalt haben werden nahezu weltweit von allen Patentamtsbürokraten liebend gerne und auch sehr erfolgreich unter Hinweis darauf, daß die Patentanmeldung nicht den (allgemein anerkannten!) Thermodynamische Hauptsätze(n) entsprechen bzw. unter Hinweis auch auf nicht patentierfähige „Perpetual mobile“, abgewiesen.

Auch das US Patentamt geht prinzipiell genauso vor. Aber meines Wissens nach, nur in den USA, gibt es eine rühmliche Ausnahme. Nämlich die, dann wenn der Erfinder dem Patentamt seine Erfindung praktisch vorführt, dann gibt es doch ein Patent für seine Idee, auch wenn diese NICHT anerkannten wissenschaftlichen Grundsätzen entspricht und so verwundert es nicht, daß es gerade in den USA eine Fülle von Patenten gibt, deren Erteilung sonstwo, weil eine angebliche offensichtliche Verletzung der Thermodynamische Hauptsätze oder vermeintlich doch ein „Perpetual mobile“, vorlag, diese mit gerade dieser Begründung abgewiesen und so nie einer breiten Öffentlichkeit bekannt wurden.

Vielleicht gibt das zu denken und vielleicht sollte man die „Thermodynamische Hauptsätze“ außerhalb des wissenschaftlichen Elfenbeinturms einmal gründlich überdenken und es könnte sich dabei durchaus herausstellen, daß sie der Universitäten Weisheit letzter Stuß sind….

Meine Herrn, die Erde ist keine Scheibe und nicht alles was man(n) (noch) nicht wissenschaftlich erklären kann, gibt es nicht. In dieser Situation kommt der Szene der unkonventionellen Wissenschaftler und Erfinder und den von ihnen dargestellten Gedankengut eine Schlüsselrolle zu. Die Wissenschaftsgeschichte zeigt, daß Außenseiter immer einen erheblichen Anteil an Innovationen hatten. Als Beispiele dazu dienen z. B. Michael Faraday (Buchbinder und Laborgehilfe) oder der Arzt Robert Mayer der als Thermodynamik Pionier gilt.
Ich geben zu, Fachleute, die in der traditionellen Physik geschult sind, werden oft vor eine harte Probe gestellt, denn so manche Wirkungsweise ist mit dem bis heute bekannten und anerkannten physikalischen Wissen nicht erklärbar, oder doch zumindest nur teilweise erklärbar. Aber auch ein geschulter Fachmann sollte immer frei bleiben und selbständig denken, und er sollte sich vom zeitlich bedingten Rahmen des anerkannten Fachwissens nicht eingrenzen und einschränken lassen, was leider oftmals kaum geschieht.

Es ist zu bedenken, daß die etablierte Wissenschaft schon oft fundamentale Thesen abzuändern oder gar aufzugeben genötigt war. Denken wir doch an Galileo Galilei, um nur ein Beispiel zu nennen. Dieser Mann wurde von der menschlichen Gesellschaft beinahe als Hexer und Zauberer verbrannt, nur weil eine Wahrheit, die er erforscht und erkannt hatte, der damaligen Schulwissenschaft nicht genehm war.

Ich denke, unser Schulwissen ist nicht falsch, aber es ist unvollständig, und deshalb besteht die Möglichkeit, falsche Schlüsse zu ziehen.

7.0.0.1. Geheimpatente
Da bei Gott nicht alles glänzt nur weil es aus den USA kommt, möchte ich noch anmerken, daß die in den USA **(in Deutschland übrigens genauso**) praktizierten „Geheimpatente“, sowohl für Forscher wie auch für den Rest der Menschheit nicht gerade das Gelbe vom Ei sind.

Ein Geheimpatent liegt vor, wenn darin ein Staatsgeheimnis offenbart ist. (und wie definiert unser Herr Beamtenkopf was ein Staatsgeheimnis ist?) Es versteht sich, daß solche Anmeldungen/Patente nicht in der öffentlichen, sondern in einer besonderen (geheimen) Rolle geführt werden. Entstehen dem Erfinder dadurch Verluste (wie soll er das je beweisen?) bei der geschäftlichen Verwertung, so steht ihm ein Anspruch auf Entschädigung zu.

Noch offenen Fragen? Nun es ist doch alles bestens geregelt, oder? Es fragt sich nur für wen und in wessen Sinne?

In aller Regel, mit ganz wenigen Ausnahmen, wird man aus meiner Sicht immer dann Beamter, wenn man weder zum Unternehmer noch zu sonst etwas taugte. Beamte tun bestenfalls ihre Pflicht und sonst gar nichts. Und solch ein beamteter Mensch ist dann der für die wissenschaftlich - technische Evaluation herangezogene Experte der z. T. jene Phänomene an der Grenze unseres Wissens patentrechtlich beurteilen soll?

Können Sie es verstehen, daß solch ein Expertokrat letztendlich entscheidet ob diese oder jene Erfindung dem Rest der Menschheit auch zugemutet werden darf, diese Erfindung ein Staatsgeheimnis darstellt?

Mir kommt es da schlicht und ergreifend hoch, man sollte ein gut Teil unsere Politiker und Beamtenköpfe, die noch nie und nimmer irgend etwas wirklich Positives produziert haben zur Machtentwöhnung senden, oder wahrscheinlich noch besser, ganz einfach mit einem Empowerment der Massen, somit mit echter E-Democracy zum Teufel jagen. Aber das ist eine andere Sache.

Doch bevor der Frust auf Politik und teilweise mehr als provozierendem Beamtentum überschäumt, sehen Sie sich die tieferstehende Patensammlung an, diese birgt jede Menge an wertvollen Infos.

7.0.0.2. Patentieren „ja“ oder „nein“?
Für viele geniale Einfälle gibt es weltweit zahlreiche Patente und durch Verbesserungen bereits bestehender veröffentlichter Patente kann man ziemlich leicht an ein eigenes Patent gelangen.

Aber Vorsicht!
Gehen Sie zu einem Chirurgen dann will er operieren, gehen Sie zu einem Patentanwalt dann will er patentieren. So weit so gut, so ist eben unsere Normalität.

Es kommt halt wie immer auf das „wie“, auf das „warum“ an. Manchmal wird eine Operation schlicht lebenserhaltend und mehr als notwendig sein, und manchmal wird die Operation nur den Chirurgen ernähren. Und beim „patentieren“ ist es sinngemäß oftmals genauso.

Insbesondere beim Thema „Neue Energie“ scheiden sich die Geister in Hinblick, soll ich oder soll ich nicht, meine Idee, meine Erfindung patentieren lassen?

Ich raten bei „neuer Energie“ eher zur NICHT Patenteinreichung. Diese Überlegung entspringt nicht so sehr philanthropischen Gedanken, sondern viel mehr aus vielerlei Praxis- und Vernunftgründen.

Liebe Frau Erfinder, lieber Herr Erfinder, wie reich, wie finanzstark sind Sie zum Zeitpunkt der angestrebten Patentierung? Was kostet sie eine weltweiter Patentschutz (und nur dieser wäre für das Patent einer „neuen Energie“ auch sinnvoll. Was kostet es denn so wirklich jetzt und dann später jedes Jahr erneut durch die jährlichen Gebühren der lfd. Erneuerung des Patenschutzes?

Können, wollen Sie sich das wirklich leisten? Fragen sie „Ihren“ Patenanwalt über die echten Gesamtkosten der angestrebten Patentierung und fragen Sie Ihn auch über die jährlichen Folgekosten. Er sollte Ihnen diese Frage schriftlich beantworten, nur um spätere Mißverständnis vorzubeugen. Sie werden sehen der Herr Patentanwalt wird sich winden und drehen mit einer solchen schriftlichen Antwort, weil er damit seine Felle davon schwimmen sieht. Wetten wir?

Und fragen Sie Ihn noch etwas. Wie will er in der Praxis, nicht in der Theorie, Ihre dann eventuell um viel Geld (Ihr Geld) erworbenen Patentansprüche z. B. in China, in den ehemaligen einzelnen (nun selbständigen) Staatsgebilden der Sowjetunion, oder gar in dem einen oder anderen afrikanischen Staat wirklich durchsetzen? Also wenn er jetzt noch immer nicht stottert der Herr Patentanwalt, dann nennen Sie ihn mir bitte.
Und noch etwas, aus unserer Sicht ist so manche Innovation de jure sehr wohl aber in der Praxis nicht wirklich patentierfähig.

Ein einfaches Beispiel, die Erfindung des Automobils erfolgte praktisch zeitgleich durch die Herrn Benz (Deutschland) und Marcus (Österreich) beide Erfindungen wurden nicht patentiert. Die Schiffschraube des Herrn Ressl, die Schreibmaschine des Herrn Madersberger etc. etc. wurde auch nicht patentiert. Warum wohl? Jeder der Herrn wäre nur mehr irgendeinem weltweiten Patent Verletzer nachgelaufen, dazu hatten Sie offensichtlich weder die Muße noch das Geld und die Menschheit **„brauchte**“ diese Innovationen und diese Leute waren stolz darauf diese IHRE INNOVATION der Menschheit zu überantworten.

Und ich denke viel anders wird sich ein Durchbruch der einen oder anderen wirklich brauchbaren Idee auf dem Gebiete der freien (neuen) Energie auch nicht abspielen; aber der- oder diejenige der diese Innovation „erfunden“ hat wird sicherlich dann, wenn er es nicht ganz dumm anstellt, erheblich finanziell (auch ohne Patentierung) mitschneiden können.

Wenn Sie hier Rat benötigen, setzen Sie sich einfach mit mir in Verbindung. alfred@klaar.at

Bevor mich aber die gesamte Zunft der Patentanwälte in ihr tägliches Abendgebet aufnimmt möchten ich der Fairneß halber schon anmerken, lassen Sie sich durch mein Statement der „Vorsicht“ nicht gleich ins Boxhorn jagen, es kommt halt auf das „wie und „warum“ an, und man sollte schon vorher wissen auf was man sich da beim „patentieren“ einläßt. Gelegentlich lohnt es sich aber doch etwas Neues selbst zu entwickeln (so bekommt man statt ein paar Krumen

u. U. vielleicht sogar den ganzen Kuchen, aber möglicherweise verschluckt man sich auch am ganzen Kuchen…)

Falls Ihr genialer Einfall nach erster Abschätzung und Prüfung nicht so ganz umsetzbar ist, so muß man ihn nicht zwangsläufig total verwerfen. Mit geeigneten Problemlösungsstrategien und Kreativtechniken ist manchmal trotzdem eine Umsetzung möglich, wenngleich diese Techniken oft zu einen ganz anderen Ansatz führen.

7.0.0.3. Patendauer

Die Patentierung einer Erfindung gibt dem Erfinder generell das uneingeschränkte Recht über seine Idee 20 Jahre lang ab der Anmeldung in jeder Hinsicht zu verfügen.

Bevor Sie eine, in eventu sehr teure, „Patenverletzung“ begehen erkundigen sie sich einfach kostenlos beim zuständigen Patentamt ob das Patent noch aufrecht ist. Wenn es dem Patentinhaber oftmals jahrelang nicht gelungen ist „sein“ Patent kommerziell zu verwerten, dann können Sie oftmals alle Rechte an „seinen“ Patent um einen Apfel und ein Ei erwerben.

Patentinhaber sind oftmals Genies, leider selten auch Kaufleute.

Auflistung einschlägiger US Patente

1. Plasmageneratoren >>>ca. 5.500 Seiten Infos

US Patent #:

	Inductively coupled plasma generating apparatus incorporating double-layered coil antenna
6805779	Plasma generation using multi-step ionization
6793897	Biological and chemical defense apparatus utilizing cold plasma generated pressurized activated oxygen
6787730	Device for plasma incision of matter with a specifically tuned radiofrequency electromagnetic field generator
6783639	Coils for generating a plasma and for sputtering
6781087	Three-phase plasma generator having adjustable electrodes
6777881	Power supply apparatus for generating plasma
6771026	Plasma generation by mode-conversion of RF-electromagnetic wave to electron cyclotron wave
6770896	Method for generating extreme ultraviolet radiation based on a radiation-emitting plasma
6768079	Susceptor with built-in plasma generation electrode and manufacturing method therefore
6765466	Magnetic field generator for magnetron plasma
6764658	Plasma generator
6762424	Plasma generation
6762393	Inductively coupled plasma source with conductive layer and process of plasma generation

6761796	Method and apparatus for micro-jet enabled, low-energy ion generation transport in plasma processing
6760234	DC power supply apparatus for a plasma generating apparatus
6759302	Method of generating multiple oxides by plasma nitridation on oxide
6740842	Radio frequency power source for generating an inductively coupled plasma
6737352	Method of preventing particle generation in plasma cleaning H2 Contamination control of gaseous emissions by corona-discharge generation of plasma
6726803	Multi-sectional plasma generator, with discharge gaps between multiple elements forming a plasma discharge cavity
6718272	Fast transient protection for RF plasma generator
6717368	Plasma generator using microwave
6706141	Secret Info has told me, this patent is useful connected with oxyhydrogen.
6693609	Method of generating optimal pattern of light emission and method of measuring contour noise and method of selecting gray scale for plasma display panel
6685800	Apparatus for generating inductively coupled plasma
6666982	Protection of dielectric window in inductively coupled plasma generation
6662793	Electronic circuits for plasma-generating devices
6635997	Microwave plasma generator, method of decomposing organic halide, and system for decomposing organic halide
6635996	Plasma generating apparatus, plasma generating method and gas processing method by plasma reaction
6626998	Plasma generator assembly for use in CVD and PECVD processes
6625251	Laser plasma x-ray generation apparatus
6610350	Method of modifying ophthalmic lens surface by plasma generated at atmospheric pressure
6610257	Low RF power electrode for plasma generation of oxygen radicals from air
6607633	Plasma generating device and plasma processing apparatus comprising such a device
6599399	Sputtering method to generate ionized metal plasma using electron beams and magnetic field
6592710	Apparatus for controlling the voltage applied to an electrostatic shield used in a plasma generator
6586887	High-frequency power supply apparatus for plasma generation apparatus
6570333	Method for generating surface plasma
6565558	High-frequency device for generating a plasma arc for the treatment of biological tissue
6538387	Secret Info has told me, this patent is useful connected with oxyhydrogen.
6528947	Hollow cathode array for plasma generation
6497803	Unbalanced plasma generating apparatus having cylindrical symmetry
6489585	Electrode for plasma generation, plasma treatment apparatus using the electrode, and plasma treatment with the apparatus
6479785	Device for plasma incision of matter with a specifically tuned radiofrequency electromagnetic field generator
6477216	Compound plasma configuration, and method and apparatus for generating a compound plasma configuration

6465964	Plasma treatment apparatus and plasma generation method using the apparatus
6463875	Multiple coil antenna for inductively - coupled plasma generation systems
6456010	Discharge plasma generating method, discharge plasma generating apparatus, semiconductor device fabrication method, and semiconductor device fabrication apparatus
6453660	Combustor mixer having plasma generating nozzle
6451161	Method and apparatus for generating high-density uniform plasma
6451160	Plasma generation apparatus with a conductive connection member that electrically connects the power source to the electrode
6441554	apparatus for generating low temperature plasma at atmospheric pressure
6439155	Remote plasma generator with sliding short tuner
6437512	Plasma generator
6422002	Method for generating a highly reactive plasma for exhaust gas aftertreatment and enhanced catalyst reactivity
6419538	Marine propulsion system and method using an in-situ generated water plasma
6417079	Discharge electrode, high-frequency plasma generator, method of power feeding, and method of manufacturing semiconductor device
6412438	Downstream sapphire elbow joint for remote plasma generator
6401653	Microwave plasma generator
6398929	Plasma reactor and shields generating self-ionized plasma for sputtering
6397776	Apparatus for large area chemical vapor deposition using multiple expanding thermal plasma generators
6396213	Apparatus for generating a compound plasma configuration with multiple helical conductor elements
6390020	Dual face shower head magnetron, plasma generating apparatus and method of coating substrate
6387207	Integration of remote plasma generator with semiconductor processing chamber
6382129	Semiconductor wafer processor, plasma generating apparatus, magnetic field generator, and method of generating a magnetic field
6380684	Plasma generating apparatus and semiconductor manufacturing method
6377436	Microwave transmission using a laser-generated plasma beam waveguide
6377149	Magnetic field generator for magnetron plasma generation
6368469	Coils for generating a plasma and for sputtering
6353201	Discharge electrode, RF plasma generation apparatus using the same, and power supply method
6340863	Microwave plasma generator and system for decomposing organic halide
6335595	Plasma generating apparatus
6329628	Methods and apparatus for generating a plasma torch
6320937	Method and apparatus for continuously generating laser plasma X-rays by the use of a cryogenic target
6312556	Beat frequency modulation for plasma generation
6309978	Beat frequency modulation for plasma generation
6297595	Method and apparatus for generating a plasma

2. Knallgas – Wasserstoff weitere ca. 19.700 Seiten Infos

US Patent #:

6,911,193	Integration of mixed catalysts to maximize syngas production
6,911,187	Apparatus for internal heating type reformation by oxidation
6,908,602	Hydrocarbon conversion process
6,908,571	Process and reactor for the preparation of hydrogen and carbon monoxide rich gas
6,905,998	Catalyst performance recovery method for reforming catalyst apparatus
6,905,666	Secret Info has told me, this patent is useful connected with oxyhydrogen.
6,902,717	Process for the catalytic partial oxidation of a hydro carbonaceous feedstock
6,899,862	Method for controlled generation of hydrogen by dissociation of water
6,899,861	Heat exchanger mechanization to transfer reformate energy to steam and air
6,899,859	Method for preparing a H2-rich gas and a CO2-rich gas at high pressure
6,899,855	Hydrogen-occlusion alloy regenerating apparatus
6,896,984	Methods for reducing mass and volume of a fuel processor
6,896,868	Regeneration of synthesis gas catalysts
6,893,482	Method for improving metals recovery using high temperature pressure leaching
6,887,456	Catalyst system for enhanced flow syngas production
6,887,455	Catalytic generation of hydrogen
6,884,368	Process for the production of a mixture comprising hydrogen and CO
6,884,326	Process for production of hydrogen using nonthermal plasma
6,881,394	Steam reformer for methane with internal hydrogen separation and combustion
6,878,471	Process for the regeneration of reforming catalysts
6,878,362	Fuel processor apparatus and method based on autothermal cyclic reforming
6,875,417	Catalytic conversion of hydrocarbons to hydrogen and high-value carbon
6,875,411	Process for the production of hydrogen
6,872,379	Method for the reformation of fuels, in particular heating oil
6,872,378	Solar thermal aerosol flow reaction process
6,869,585	Method for controlled generation of hydrogen by dissociation of water
6,869,580	Pyrolysis-based fuel processing method and apparatus
6,866,836	Method of generating hydrogen from borohydrides and water
6,866,835	Process for the production of hydrogen
6,863,879	Installation and process for the production of synthesis gas comprising a reactor for steam reforming and a reactor for converting CO2 heated by a hot gas
6,863,878	Method and apparatus for producing synthesis gas from carbonaceous materials
6,852,668	Catalyst for hydrocarbon reforming reaction
6,852,307	Catalytic oxidation process with flow control system
6,852,303	Method of using molybdenum carbide catalyst
6,849,247	Gas generating process for propulsion and hydrogen production
6,846,475	Hydrogen refinement apparatus
6,838,071	Process for preparing a H2-rich gas and a CO2-rich gas at high pressure
6,834,623	Portable hydrogen generation using metal emulsions 423/644..658
6,833,126	Method and apparatus for reforming fuel
6,833,013	Process for the production of synthesis gas
6,833,013	Process for the production of synthesis gas

6,824,902	Process and device for production of electricity in a fuel cell by oxidation of hydrocarbons followed by a filtration of particles
6,824,576	Hydrogen produced from heterocyclic compounds
6,821,501	Secret Info has told me, this patent is useful connected with oxyhydrogen.
6,821,500	Thermal synthesis apparatus and process
6,821,499	Method of generating hydrogen by reaction of borohydrides and hydrates
6,818,198	Hydrogen enrichment scheme for autothermal reforming
6,818,189	Tubular reactor with gas injector for gas phase catalytic reactions
6,814,782	Method for reversibly storing hydrogen on the basis of alkali metals and aluminum
6,811,764	Hydrogen generation system using stabilized borohydrides for hydrogen storage
6,809,121	Cogeneration of methanol and electrical power
6,805,850	Co-shift device
6,805,721	Fuel processor thermal management system
6,803,029	Process for reducing metal catalyzed coke formation in hydrocarbon processing
6,797,253	Conversion of static sour natural gas to fuels and chemicals
6,797,252	Hydrocarbon gas to liquid conversion process
6,793,910	Process to accomplish autothermal or steam reforming via a reciprocating compression device
6,793,909	Direct synthesis of catalyzed hydride compounds
6,793,909	Method of generating hydrogen by reaction of borohydrides and hydrates
6,793,698	Fuel processor reactor with integrated pre-reforming zone
6,790,432	Suppression of methanation activity of platinum group metal water-gas shift catalysts
6,790,431	Reactor for temperature moderation
6,790,430	Hydrogen production from carbonaceous material
6,790,416	Gas generating process for propulsion and hydrogen production
6,790,247	Compact fuel processor
6,787,027	Secret Info has told me, this patent is useful connected with oxyhydrogen.
6,783,750	Hydrogen production method
6,783,749	Gas recovery process
6,780,396	Process for the production of a gas that contains hydrogen from hydrogen sulfide
6,780,395	Synthesis gas production
6,777,117	Catalysts for water gas shift reaction, method for removing carbon monoxide in hydrogen gas and electric power-generating system of fuel cell
6,773,692	Method of production of pure hydrogen near room temperature from aluminum based hydride materials
6,773,691	Controlling syngas H2:CO ratio by controlling feed hydrocarbon composition
6,767,530	Method for producing hydrogen
6,761,838	Cyclic autothermal hydrocarbon reforming process
6,759,156	Operating states for fuel processor subsystems
6,758,981	Method and apparatus for by-product removal in a hydrogen generation system
6,753,352	Method for manufacturing synthesis gas and method for manufacturing ethanol
6,749,829	Hydrogen to steam reforming of natural gas to synthesis gas
6,749,828	Process for reforming hydrocarbon
6,747,066	Selective removal of oxygen from syngas
6,746,658	Rhodium cloth catalyst for partial oxidation of hydrocarbons

6,746,657	Method for reduced methanation
6,746,624	Synthesis gas production by steam reforming using catalyzed hardware
6,746,496	Method of production of pure hydrogen near room temperature from aluminum-based hydride materials
6,743,537	Hydrogen gas generating systems, fuel cell systems and methods for stopping operation of fuel cell system
6,743,410	Primary reactor liquid water and air injection for improved management of a fuel processor
6,740,435	System and method for preparing fuel for fuel processing system
6,740,303	Gas generating system for a fuel cell system and method of operating a gas generating system
6,740,258	Process for the production of synthesis gas in conjunction with a pressure swing adsorption unit
6,733,741	Method for improving metals recovery using high temperature pressure leaching
6,733,732	Reactor for generating moisture
6,733,725	Reversible hydrogen storage composition
6,733,692	Rhodium foam catalyst for the partial oxidation of hydrocarbons
6,730,285	Production of hydrogen and carbon monoxide containing synthesis gas by partial oxidation
6,726,893	Hydrogen production by high-temperature water splitting using electron conducting membranes
6,726,892	Advanced aluminum alloys for hydrogen storage
6,726,853	Process for producing synthetic gas employing catalyst for reforming
6,726,852	Method of manufacturing synthesis gas
6,726,851	Process for carrying out non-adiabatic catalytic reactions
6,726,850	Catalytic partial oxidation using staged oxygen addition
6,723,298	Method for catalytic conversion of carbon monoxide in a hydrogen-containing gas mixture
6,719,817	Compact solid source of hydrogen gas
6,713,040	Method for generating hydrogen for fuel cells
6,702,960	Catalytic partial oxidation with a rhodium-iridium alloy catalyst
6,699,457	Low-temperature hydrogen production from oxygenated hydrocarbons
6,692,713	Process for the catalytic oxidation of carbonaceous compounds
6,692,661	Process for partial oxidation of hydrocarbons
6,689,294	Process for autothermal reforming of a hydrocarbon feedstock
6,682,714	Method for the production of hydrogen gas
6,680,044	Method for gas phase reactant catalytic reactions
6,680,043	Hydrogen production by high-temperature water splitting using electron-conducting membranes
6,680,042	Method of rapidly carrying out a hydrogenation of a hydrogen storage material
6,680,006	Conversion of natural gas to synthesis gas using nickel catalyst
6,676,921	Method for preparation of lithium aluminum hydride from sodium aluminum hydride
6,673,270	Process for the preparation of hydrogen and carbon monoxide
6,670,058	Thermostatic process for CO2-free production of hydrogen and carbon from hydrocarbons
6,669,923	Gas generator

6,669,922	Installation for the production of pure hydrogen from a gas containing helium
6,669,917	Process for converting coal into fuel cell quality hydrogen and sequestration-ready carbon dioxide
6,667,123	Down-sized water-gas-shift reactor
6,667,022	Process for separating synthesis gas into fuel cell quality hydrogen and sequestration ready carbon dioxide
6,667,022	Process for separating synthesis gas into fuel cell quality hydrogen and sequestration ready carbon dioxide
6,663,681	Method and apparatus for supplying hydrogen and portable cassette for supplying hydrogen
6,660,415	Hydrogen generating system
6,660,238	Preparation and purification of diborane
6,652,830	Catalysts reactors and methods of producing hydrogen via the water-gas shift reaction
6,652,830	Catalysts reactors and methods of producing hydrogen via the water-gas shift reaction
6,641,795	Reformer and method for operation thereof
6,638,493	Method for producing hydrogen
6,635,191	Supported nickel-magnesium oxide catalysts and processes for the production of syngas
6,630,119	Hydrogen gas generating method
6,63,0116	Method of rapidly carrying out a hydrogenation of a hydrogen storage material
6,626,979	Compact fuel processor
6,623,720	Transition metal carbides, nitrides and borides, and their oxygen containing analogs useful as water gas shift catalysts
6,623,719	System for hydrogen generation through steam reforming of hydrocarbons and integrated chemical reactor for hydrogen production from hydrocarbons
6,620,398	Method for the production of hydrogen and applications thereof
6,617,064	Stabilized aluminum hydride polymorphs
6,616,909	Method and apparatus for obtaining enhanced production rate of thermal chemical reactions
6,612,830	Anode gas burner for inert gas generation, method and apparatus
6,610,265	Method and system for desulfurizing gasoline or diesel fuel for use in a fuel cell power plant
6,608,008	Lithium hydroxide compositions
6,607,707	Production of hydrogen from hydrocarbons and oxygenated hydrocarbons
6,607,678	Catalyst and method of steam reforming
6,605,376	Process for the production of hydrogen and electrical energy from reforming of bio - ethanol
6,599,491	Bimodal hydrogen manufacture
6,596,423	Method for low temperature catalytic production of hydrogen
6,593,017	Hydrogen gas generating method
6,592,723	Process for efficient microwave hydrogen production
6,589,303	Hydrogen production by process including membrane gas separation
6,582,676	Method for producing hydrogen
6,579,510	SPOX-enhanced process for production of synthesis gas

6,576,217	Methanol reforming catalyst, method of manufacturing methanol reforming catalyst and method of reforming methanol
6,576,158	Synthesis gas production by steam reforming
6,572,837	Fuel processing system
6,572,836	Method for producing gaseous hydrogen by chemical reaction of metals or metal hydrides subjected to intense mechanical deformations
6,572,787	Evacuation of hydrogen and carbon monoxide from a hydro carbonaceous feedstock
6,565,817	Reformer for a fuel cell
6,562,315	Suppression of methanation activity by a water gas shift reaction catalyst
6,555,259	Catalytic generation of hydrogen
6,555,088	Method for catalytic conversion of carbon monoxide in a hydrogen containing gas mixture with improved cold start behavior
6,555,078	Method of preparing lithium salts
6,544,494	Reformate preheat of ATR reactants
6,541,676	Secret Info has told me, this patent is useful connected with oxyhydrogen.
6,540,975	Method and apparatus for obtaining enhanced production rate of thermal chemical reactions
6,534,033	System for hydrogen generation
6,530,961	Alkaline aqueous solutions and use thereof in processes for dyeing cellulosic textile materials
6,527,980	Reforming with intermediate reactant injection
6,524,550	Process for converting carbon monoxide and water in a reformate stream
6,521,205	Method for producing gaseous hydrogen by chemical reaction of metals or metal hydrides subjected to intense mechanical deformations
6,521,204	Method for operating a combination partial oxidation and steam reforming fuel processor
6,521,197	Catalytical process of methanol reformation
6,521,143	Co-production of carbon monoxide-rich syngas with high purity hydrogen
6,517,806	Hydrogen generation from water split reaction
6,517,805	Method and apparatus for producing hydrogen
6,514,478	System for hydrogen generation
6,509,000	Low temperature process for the production of hydrogen
6,506,360	Method for producing hydrogen
6,506,359	Auto-oxidation and internal heating type reforming method and apparatus for hydrogen production
6,500,403	Process for the production of hydrogen
6,497,856	System for hydrogen generation through steam reforming of hydrocarbons and integrated chemical reactor for hydrogen production from hydrocarbons
6,497,855	Process for the production of hydrogen from hydrogen sulfide
6,489,370	Method of manufacturing a synthesis gas to be employed for the synthesis of gasoline, kerosene and gas oil
6,488,907	Catalytic partial oxidation processes and catalysts with diffusion barrier coating
6,488,905	Destruction of waste gas
6,488,838	Chemical reactor and method for gas phase reactant catalytic reactions
6,486,087	Method for periodically reactivating a copper-containing catalyst material
6,482,378	Selective removing method of carbon monoxide and hydrogen refining method

6,482,375	Method for carrying out a chemical reaction
6,478,844	Method for making hydrogen storage alloy
6,475,454	Thermally limited selective oxidation methods and apparatus
6,475,409	Method of manufacturing synthesis gas
6,471,935	Hydrogen storage materials and method of making by dry homogenization
6,468,499	Method of generating hydrogen by catalytic decomposition of water
6,464,955	Production of hydrogen and carbon monoxide
6,455,182	Shift converter having an improved catalyst composition, and method for its use
6,451,088	Method and apparatus for activating a hydrogen-absorbing alloy
6,447,745	Catalytic oxidation process
6,444,190	Reduction compositions and processes for making the same
6,440,385	Method for producing hydrogen
6,436,363	Process for generating hydrogen-rich gas
6,436,354	Apparatus for generation of pure hydrogen for use with fuel cells
6,432,379	Apparatus and methods for storing and releasing hydrogen
6,432,378	Process for operating a methanol reforming system
6,432,368	Staged catalytic ammonia decomposition in integrated gasification combined cycle systems
6,416,731	Process for catalytical steam reforming of a hydrocarbon feedstock
6,413,491	Reformer, method of reforming, and fuel cell system equipped with the reformer
6,413,449	Method of using catalyst for steam reforming of alcohols
6,410,258	Molecular hydrogen production by direct electron transfer
6,409,940	Nickel-rhodium based catalysts and process for preparing synthesis gas
6,409,939	Method for producing a hydrogen-rich fuel stream
6,409,780	Water-laden solid matter of vapor-phase processed inorganic oxide particles and slurry for polishing and manufacturing method of semi conductor devices
6,403,051	Recovery of sulfur from H2S and concurrent production of H2 using short contact time CPOX
6,402,988	Process for producing a syngas
6,395,252	Method for the continuous production of hydrogen
6,395,251	Steam-hydrocarbon reformer and process
6,395,243	Catalytic or non-catalytic processes with enriched oxygen as a reactant
6,395,197	Hydrogen and elemental carbon production from natural gas and other hydrocarbons
6,387,843	Secret Info has told me, this patent is useful connected with oxyhydrogen.
6,387,152	Process for manufacturing nanocrystalline metal hydrides
6,383,469	Device for utilizing heat which is formed during a catalytic reaction
6,379,645	Production of hydrogen using methanation and pressure swing adsorption
6,379,586	Hydrocarbon partial oxidation process
6,379,585	Preparation of sulphides and selenides
6,376,423	Catalyst for preparation of synthesis gas and process for preparing carbon monoxide
6,375,924	Water gas shift process for purifying hydrogen for use with fuel cells
6,375,916	Process for the autothermal reforming of a hydrocarbon feedstock containing higher hydrocarbons
6,372,190	Process for filling and emptying a vessel charged with flammable and aggressive gas

6,372,156	Methods of chemically converting first materials to second materials utilizing hybrid-plasma systems
6,361,757	Catalyst for manufacturing hydrogen or synthesis gas and manufacturing method of hydrogen or synthesis gas
6,361,715	Method for reducing the redox potential of substances
6,358,488	Molecular hydrogen production by direct electron transfer
6,356,613	Apparatus for the recombination of hydrogen in a gas mixture
6,355,219	Nickel-alumina aerogel catalyst for carbon dioxide reforming of methane and the preparation method thereof
6,348,278	Method and system for supplying hydrogen for use in fuel cells
6,342,198	Method for generation of hydrogen gas
6,342,197	Multi-stage combustion for fuel processing for use with fuel cell
6,340,437	Process for preparing synthesis gas by autothermal reforming
6,338,833	Process for autothermal catalytical stream reforming
6,335,474	Process for pre-reforming of oxygen-containing gas
6,331,283	Low-temperature autothermal steam reformation of methane in a fluidized bed
6,328,945	Integrated steam methane reforming process for producing carbon monoxide
6,322,723	Method of generating hydrogen gas
6,315,977	Process and apparatus for producing hydrogen by thermocatalytic decomposition of hydrocarbons
6,315,973	Process for operating equilibrium controlled reactions
6,312,660	Process for preparing synthesis gas
6,312,658	Integrated steam methane reforming process for producing carbon monoxide and hydrogen
6,303,098	Steam reforming catalyst
6,303,092	Process for operating equilibrium controlled reactions
6,303,089	Reclaiming of purge gas from hydrotreaters and hydrocrackers
6,299,995	Process for carbon monoxide preferential oxidation for use with fuel cells
6,299,994	Process for providing a pure hydrogen stream for use with fuel cells
6,299,853	Method and apparatus for operating a reformer/co oxidation unit
6,298,652	Method for utilizing gas reserves with low methane concentrations and high inert gas concentrations for fueling gas turbines
6,294,149	Process for operating a water vapor reforming system, a reforming system operable thereby and a fuel cell system operating process
6,293,979	Process for the catalytic conversion of methane or natural gas to syngas or a carbon monoxide and hydrogen
6,293,978	Process for converting organic compounds using composite materials in membrane reactors
6,290,877	Method of starting and stopping methanol reforming apparatus and apparatus for supplying fuel to said apparatus
6,287,529	Method for improving metals recovery using high temperature pressure leaching
6,284,217	Method and catalyst structure for steam reforming of a hydrocarbon
6,284,157	Process for producing an H2-CO gas mixture
6,280,864	Control system for providing hydrogen for use with fuel cells
6,280,701	Method for the treatment of a methanol reforming catalyst
6,277,338	System for converting light hydrocarbons to heavier hydrocarbons with separation of water into oxygen and hydrogen

6,274,113	Increasing production in hydrocarbon conversion processes
6,268,084	Hydrogen-absorbing alloy and secondary battery
6,268,075	Process for the water vapor reforming of a hydrocarbon or a hydrocarbon derivative, reforming system operable thereby, and fuel cell operating process
6,267,912	Distributed injection catalytic partial oxidation process and apparatus for producing synthesis gas
6,264,856	Three-step reforming reactor especially for mobile fuel cell
6,254,848	Process for the production of hydrogen-rich gas
6,254,839	Apparatus for converting hydrocarbon fuel into hydrogen gas and carbon dioxide
6,254,807	Control of H2 and CO produced in partial oxidation process
6,251,349	Method of fabrication of complex alkali metal hydrides
6,238,823	Non-stoichiometric AB5 alloys for metal hydride electrodes
6,238,816	Method for steam reforming hydrocarbons using a sulfur-tolerant catalyst
6,238,640	Conversion method of carbon monoxide and catalyst
6,235,417	Two-phase hydrogen permeation membrane
6,235,262	Process for the combined production of hydrogen rich gas and electrical power
6,231,831	Hydrogen separating membrane, methanol reformation system equipped therewith, and operating method therefor
6,231,636	Mechanochemical processing for metals and metal alloys
6,228,338	Preparation of aluminum hydride polymorphs, particularly stabilized alpha. -alh$_3$
6,224,842	Heat and mass transfer apparatus and method for solid-vapor sorption systems
6,224,789	Process and reactor system for preparation of synthesis gas
6,221,331	Method of synthesis of lithium substituted borohydride reagents and method of synthesis of reactive lithium hydride
6,214,314	Process for the preparation methanol and hydrogen
6,214,258	Feed gas pretreatment in synthesis gas production
6,214,066	Synthesis gas production by ion transport membranes
6,207,132	Process for producing high purity hydrogen
6,207,122	Method for converting hydrocarbon fuel into hydrogen gas and carbon dioxide
6,206,951	Method for improving metals recovery using high temperature leaching
6,184,432	Method of generating hydrogen gas
6,180,081	Reactor unit for a catalytic chemical reaction, especially for a catalyzing methanol reformer
6,171,992	Treatment process for a methanol reforming catalyst therefor
6,171,574	Method of linking membrane purification of hydrogen to its generation by steam reforming of a methanol-like fuel
6,168,644	Titanium-base powders and process for production of the same
6,165,633	Method of and apparatus for reforming fuel and fuel cell system with fuel-reforming apparatus incorporated therein
6,165,434	Purification of diborane
6,153,163	Ceramic membrane reformer
6,146,608	Stable hydride source compositions for manufacture of semiconductor devices and structures
6,143,688	Method of making a bulk catalyst
6,143,203	Hydrocarbon partial oxidation process
6,139,815	Hydrogen lithium titanate and manufacturing method therefor
6,129,861	Membrane reactor for producing CO- and CO.sub.2 -free hydrogen

6,123,913	Method for converting hydrocarbon fuel into hydrogen gas and carbon dioxide
6,123,873	Method for soot-free start-up of autothermal reformers
6,117,916	Integration of a cryogenic air separator with synthesis gas production and conversion
6,117,209	Hydrometallurgical process for treating alloys and drosses to recover the metal components
6,113,874	Thermochemical regenerative heat recovery process
6,113,806	Method of generating hydrogen gas compositions
6,110,979	Utilization of synthesis gas produced by mixed conducting membranes
6,106,801	Method for the reversible storage of hydrogen
6,103,143	Process and apparatus for the production of hydrogen by steam reforming of hydrocarbon
6,099,811	Self-heating metal-hydride hydrogen storage system
6,096,286	System for steam reformation of a hydrocarbon and operating method therefore
6,096,195	Process and unit for hydrotreating a petroleum feedstock that comprises the cracking of ammonia and the recycling of hydrogen in the unit
6,096,106	Endothermic reaction apparatus
6,090,356	Removal of acidic gases in a gasification power system with production of hydrogen
6,090,312	Reactor-membrane permeator process for hydrocarbon reforming and water gas-shift reactions
6,086,840	Process for making ammonia from heterogeneous feedstock
6,086,839	System and process for the water vapor reforming of a hydrocarbon
6,083,425	Method for converting hydrocarbon fuel into hydrogen gas and carbon dioxide
6,080,381	Method for inducing hydrogen desorption from a metal hydride
6,077,497	ZnS photocatalyst, preparation therefor and method for producing hydrogen by use of the same
6,077,459	Process and process unit for the preparation of ammonia synthesis gas
6,074,623	Process for thermal destruction of spent potliners,
6,074,447	Process and unit for hydrotreating a petroleum feedstock that comprises the cracking of ammonia and the recycling of hydrogen in the unit
6,071,433	Method of hydrocarbon reforming and catalyst precursor
6,069,288	Process for selectively separating hydrogen, or both hydrogen and carbon monoxide from olefinic hydrocarbons
6,066,307	Method of producing hydrogen using solid electrolyte membrane
6,063,355	Method for treating wastes by gasification
6,059,995	Process and preparation of hydrogen-rich gas
6,054,496	Method for transporting a heavy crude oil produced via a wellbore from a subterranean formation to a market location and converting it into a distillate product stream using a solvent deasphalting process
6,048,508	Process for obtaining carbon monoxide and hydrogen
6,048,473	Process for operating a system for the water vapor reforming of methanol
6,045,772	Method and apparatus for injecting a liquid hydrocarbon fuel into a fuel cell power plant reformer
6,045,688	Method based on a fluidized-bed reactor for converting hydrocarbons
6,025,075	Mixture of sorbitan ester, magnesium hydroxide and thermoplastic resin
6,024,935	Lower-energy hydrogen methods and structures

6,019,954	Catalyst and process for the conversion of carbon monoxide
6,018,091	Methods for thermally degrading unwanted substances using particulate metal compositions
6,015,041	Method for inducing hydrogen desorption from a metal hydride
6,007,69	Hydrogen storage
5,997,835	Process for steam reforming of hydrocarbons
5,990,040	Promoted and stabilized copper oxide and zinc oxide catalyst and preparation
5,984,986	Process for operating a system for the water vapor reforming of methanol
5,980,858	Method for treating wastes by gasification
5,980,857	Production of carbon monoxide from syngas
5,980,782	Face-mixing fluid bed process and apparatus for producing synthesis gas
5,976,723	Getter materials for cracking ammonia
5,958,365	Method of producing hydrogen from heavy crude oil using solvent deasphalting and partial oxidation methods
5,958,364	Heat exchange apparatus and process
5,958,29	Process for the preparation of hydrogen and carbon monoxide rich gas
5,958,091	Hydrogen preparing apparatus
5,955,044	Method and apparatus for making ultra-pure hydrogen
5,942,346	Methanol partial oxidation reformer
5,942,206	Concentration of isotopic hydrogen by temperature gradient effect in soluble metal
5,935,489	Distributed injection process and apparatus for producing synthesis gas
5,935,423	Method for producing from a subterranean formation via a wellbore, transporting and converting a heavy crude oil into a distillate product stream
5,932,141	Synthesis gas production by steam reforming using catalyzed hardware
5,929,286	Method for making hydrogen rich gas from hydrocarbon fuel
5,929,125	Method for producing heavy crude oil via a wellbore from a subterranean formation and converting the heavy crude oil into a distillate product stream
5,925,328	Steam reforming process
5,924,047	Method and apparatus for neutralizing and destroying pentaborane
5,914,093	Process for simultaneously producing hydrogen and carbon black
5,907,076	Process for selectively separating hydrogen, or both hydrogen and carbon monoxide from olefinic hydrocarbons
5,904,913	Process for obtaining a high-hydrogen, low-carbon-monoxide gas
5,904,910	Method for producing sulfur and hydrogen from a gaseous stream containing hydrogen sulfide and ammonia
5,888,470	Process for the production of hydrogen and of energy
5,883,138	Rapid injection catalytic partial oxidation process and apparatus for producing synthesis gas (law 562)
5,882,623	Method for inducing hydrogen desorption from a metal hydride
5,877,377	Metal oxide catalyst and use thereof in chemical reactions
5,867,978	System for generating hydrogen
5,863,495	Hydrogen nucleus storage method and hydrogen nucleus storage unit
5,861,137	Steam reformer with internal hydrogen purification
5,853,682	Method for inducing hydrogen desorption from a metal hydride
5,843,395	Process for hydrogen production from hydrogen sulfide dissociation
5,841,804	Method and apparatus for regenerating gas used in carbon dioxide laser generator

5,840,270	Catalytic method of generating hydrogen
5,837,217	Process for the preparation of hydrogen rich gas
5,833,723	Hydrogen generating apparatus
5,830,426	Methods for thermally degrading unwanted substances using particular metal compositions
5,830,425	Chromium-free catalyst based on iron oxide for conversion of carbon monoxide
5,827,496	Methods and systems for heat transfer by unmixed combustion
5,817,906	Process for producing light olefins using reaction with distillation as an intermediate step
5,808,120	Method of synthesis of retinoic acid
5,807,533	Method for charging a hydrogen getter
5,800,798	Process for producing fuel gas for fuel cell
5,792,443	Hydrogen nucleus storage method and hydrogen nucleus storage unit
5,773,675	Method for leaching nickel from nickel matte
5,770,781	Hydrometallurgical process for treating alloys and drosses to recover the metal components
5,762,658	Self-sustaining hydrogen generator
5,752,995	Secret Info has told me, this patent is useful connected with oxyhydrogen.
5,744,067	Production of H.sub.2 -rich gas
5,741,474	Process for production of high-purity hydrogen
5,738,736	Hydrogen storage alloy and electrode there from
5,733,984	Process for the preparation of a deuterated compound
5,733,518	Process and catalyst for dehydrogenation of organic compounds
5,730,952	Process for the preparation of lithium aluminum hydride in etheral solvents
5,728,183	Shift reactor for use with an under oxidized burner
5,718,881	Catalytic reactor designed to reduce catalyst slumping and crushing
5,714,132	Production of hydrogen and carbon monoxide from oxyfuel furnace off-gas
5,712,313	Process for carrying out chemical equilibrium reactions
5,710,087	Process for catalytic conversion of water and carbon dioxide to low cost energy, hydrogen, carbon monoxide, oxygen and hydrocarbons
5,709,791	Method for producing oxygen and hydrogen
5,702,491	Portable hydrogen generator
5,700,443	Hydrogen storing member and process for storing hydrogen into the hydrogen storing member
5,690,902	Hydrogen-powered automobile with in situ hydrogen generation
5,679,313	Hydrogen nucleus storage method and hydrogen nucleus storage unit
5,679,235	Titanium and cerium containing acidic electrolyte
5,678,167	Method for eliminating carbon oxides in the hydrogen feed to a butane isomerization process
5,676,922	Chemical reactor replacement method
5,670,129	Method for synthesizing aluminum hydride
5,669,960	Hydrogen generation process
5,661,038	Interface system for isotopic analysis of hydrogen
5,653,951	Storage of hydrogen in layered nanostructures
5,653,774	Method for preparing synthesis gas using nickel catalysts
5,651,953	Method of producing hydrogen from biomass
5,650,132	Process for producing hydrogen from hydrocarbon

5,639,401	Process for the catalytic partial oxidation of hydrocarbons
5,637,259	Process for producing syngas and hydrogen from natural gas using a membrane reactor
5,634,341	System for generating hydrogen
5,614,163	Catalyzed vapor phase process for making synthesis gas
5,609,845	Catalytic production of hydrogen from hydrogen sulfide and carbon monoxide
5,602,298	Method and apparatus for converting organic material into hydrogen and carbon by photodecomposition
5,599,517	Catalyst for steam reforming of hydrocarbons
5,595,719	Process for steam reforming of hydrocarbons
5,593,640	Portable hydrogen generator
5,591,238	Method for preparing synthesis gas using nickel catalysts
5,580,793	Process and device for determining the para content of a hydrogen gas stream
5,577,346	Multi-zone molten-metal hydrogen and fuel gas generation process
5,565,183	Method for the preparation of aluminum hydride (AlH.sub.3) by reacting magnesium hydride with aluminum halide
5,565,009	Endothermic reaction process
5,562,809	Method for making hydrogen saturated metal compounds
5,560,900	Transport partial oxidation method
5,560,752	Process for activation of metal hydrides
5,558,844	Process for the purification of hydrogen
5,556,719	Method for making high capacity hydrogen storage electrode and hydride batteries using same
5,556,603	Process for the purification of hydrogen and a purifier therefor
5,554,351	High temperature steam reforming
5,549,877	Device and process for manufacturing synthesis gases through combustion and its application
5,545,800	Clean process to destroy arsenic-containing organic compounds with recovery of arsenic
5,543,127	Dilute solution of a hydride in liquid nitrogen
5,541,017	Method for making high capacity rechargeable hydride batteries
5,538,706	Hydrogen and carbon monoxide production by partial oxidation of hydrocarbon feed
5,536,586	Composite hydrogen storage alloy material
5,536,488	Indirectly heated thermochemical reactor processes
5,529,669	Apparatus and process for the preparation of hydrogen cyanide
5,525,322	Method for simultaneous recovery of hydrogen from water and from hydrocarbons
5,514,821	Ring-labeled retinoids and intermediates, and methods for their synthesis
5,510,201	System for generating hydrogen in situ
5,508,018	Hydrogen-powered automobile with in situ hydrogen generation
5,500,198	omposite catalyst for carbon monoxide and hydrocarbon oxidation
5,498,404	Process for the steam reforming of hydrocarbons
5,496,531	High surface purity heat transfer solids for high temperature fluidized bed reactions
5,496,530	Process for the preparation of carbon monoxide rich gas
5,494,653	Method for hot gas conditioning
5,490,970	Method of producing hydrogen-storing alloy and electrode making use of the alloy

5,468,464	Process for the preparation of metal hydrides
5,468,462	Geographically distributed tritium extraction plant and process for producing detritiated heavy water using combined electrolysis and catalytic exchange processes
5,468,446	Method of operating a fuel cell wherein hydrogen is generated by providing iron in situ
5,468,309	Hydrogen storage alloy electrodes
5,464,606	Two-stage water gas shift conversion method
5,462,723	Aqueous hydrides and method of manufacture therefore
5,460,745	Process for the purification of hydrogen
5,451,386	Hydrogen-selective membrane
5,447,705	Oxidation catalyst and process for the partial oxidation of methane
5,445,803	Method and a device for decomposing tritiated water and for recovering elementary tritium
5,441,715	Method for the separation of hydrogen isotopes using a hydrogen absorbing alloy
5,441,581	Process and apparatus for producing heat treatment atmospheres
5,441,548	Process for the partial oxidation of bituminous oil
5,435,982	Method for dissociating waste in a packed bed reactor
5,427,659	Process for the manufacture of devices
5,411,928	Composition for absorbing hydrogen
5,409,684	Process and installation for the combined production of synthetic ammonia and pure hydrogen
5,409,581	Tetravalent titanium electrolyte and trivalent titanium reducing agent obtained thereby
5,397,559	Hydrogen-selective membrane
5,395,406	Structurally modified alumina supports, and heat transfer solids for high temperature fluidized bed reactions
5,391,366	Hydrogen storing member and process for storing hydrogen into the hydrogen storing member
5,387,408	Copper oxide-aluminum oxide-magnesium oxide catalysts for conversion of carbon monoxide
5,387,408	Copper oxide-aluminum oxide-magnesium oxide catalysts for of carbon monoxide
5,385,709	Method for the separate recovery of a high molecular weight gas and a low molecular weight gas from a gaseous starting mixture
5,382,271	Hydrogen generator
5,374,476	Thermal insulating system and method
5,368,835	Process for production of synthesis gas by oxidative conversion of methane or natural gas using composite catalysts
5,360,461	Polymeric storage bed for hydrogen
5,358,696	Production of H.sub.2 -rich gas
5,354,547	Hydrogen recovery by adsorbent membranes
5,348,717	Synthesis gas from particulate catalysts, and admixtures of particulate catalysts and heat transfer solids
5,330,709	Zirconium-based hydrogen storage materials useful as negative electrodes for rechargeable battery
5,326,729	Transparent quartz glass and process for its production
5,326,550	Secret Info has told me, this patent is useful connected with oxyhydrogen.

5,322,617	Upgrading oil emulsions with carbon monoxide or synthesis gas
5,314,676	Intermetallic compounds hydrides
5,306,481	Indirectly heated thermochemical reactor apparatus and processes
5,300,276	Processes for preparing hydrogen gas and determining ratio of masses between hydrogen isotopes therein
5,300,275	Steam reforming
5,300,273	Process for producing a vapor mixture of titanium tetrachloride and aluminum trichloride
5,298,233	Method and system for oxidizing hydrogen- and carbon-containing feed in a molten bath of immiscible metals
5,298,037	Metal hydrides
5,292,598	Hydrogen generator
5,291,735	High efficiency, hydrogen-driven cooling device
5,290,532	Preparation of hydrino magnesium chloride
5,286,473	Process for the production of hydrogen
5,276,237	Membrane and use thereof in oxidative conversion
5,273,686	Soluble magnesium hydrides, method of preparing them, and use thereof
5,271,916	Device for staged carbon monoxide oxidation
5,268,346	Catalysts for the high-temperature steam reforming of hydrocarbons
5,266,174	Process for reducing aqueous nitrate to ammonia
5,264,202	Combined pre reformer and convective heat transfer reformer
5,232,682	Process and installation for producing a gas containing hydrogen from methanol
5,229,102	Catalytic ceramic membrane steam-hydrocarbon reformer
5,228,529	Method for renewing fuel cells using magnesium anodes
5,221,524	Apparatus for producing hydrogen
5,215,729	Composite metal membrane for hydrogen extraction
5,211,923	Hydrogen and sulfur recovery from hydrogen sulfide wastes
5,211,921	Process of making niobium oxide
5,199,972	Solid state chemical micro-reservoirs
5,198,207	Method for the preparation of active magnesium hydride-magnesium hydrogen storage systems, which reversibly absorb hydrogen
5,198,084	Low-cost process for hydrogen production
5,194,128	Method for manufacturing ultrafine particles
5,188,810	Process for making niobium oxide
5,186,868	Methods for tritium labeling
5,183,652	Radioactive catalyst and oxidation-reduction method and apparatus using same
5,180,574	Hydrides of lithiated nickel dioxide and secondary cells prepared therefrom
5,180,572	Conversion of hydrogen sulfide to sulfur and hydrogen
5,180,568	Recovery of tritium and deuterium from their oxides and intermetallic compound useful therein
5,178,848	Lithium met tungstate
5,177,303	Process for hydrocarbon conversion
5,164,054	Low-cost process for hydrogen production
5,162,108	Method of preparing active magnesium-hydride or magnesium hydrogen-store systems
5,160,713	Process for separating oxygen from an oxygen-containing gas by using a bi-containing mixed metal oxide membrane

5,160,380	Process for improved preparation of treatment gas in heat treatments
5,158,759	Reversible storage for media as well as use of the storage
5,156,827	Apparatus, process, and composition for in-situ generation of polyhydric compounds of group IV-VI elements
5,152,976	Process for producing high purity hydrogen
5,149,516	Partial oxidation of methane over perovskite catalyst
5,141,676	Soluble magnesium hydrides, method of preparing them, and use thereof
5,134,109	Catalyst for reforming hydrocarbon with steam
5,133,929	Intermetallic compounds and hydrides
5,130,115	Process for hydrogen production from kerosene
5,130,114	Catalyst for steam reforming of hydrocarbon
5,126,304	Method for the preparation of a catalyst for water gas and hydroformylation, catalyst prepared by the method and use of the catalyst
5,124,500	Process for removing hydrogen from the presence of organic compounds
5,124,140	Process for steam reforming of hydrocarbons
5,112,591	Process for preparing precursors of catalysts containing copper, aluminum and zinc, usable for the synthesis and the decomposition of methanol
5,112,590	Separation of gas mixtures including hydrogen
5,104,516	Upgrading oil emulsions with carbon monoxide or synthesis gas
5,102,649	Process for producing peroxoniobic acid sol
5,102,645	Method for manufacture of high purity carbon monoxide
5,102,516	Method for producing a monatomic beam of ground-state atoms
5,100,642	Method of generating a fuel from water and a compound containing free radicals
5,100,638	Method for photochemically decomposing organic materials
5,100,615	Alloys of Ti-Cr-Cu for occluding hydrogen
5,096,688	Catalytic process for producing higher alcohols from synthesis gas
5,096,683	Process of combusting an H.sub.2 S-containing gas
5,096,665	Hydrogen absorbing alloys having MgZn.sub.2 -type laves phase structure
5,093,102	Process for the production of high purity hydrogen by catalytic reforming of methanol
5,093,101	Method for the preparation of active magnesium hydride-magnesium-hydrogen storage systems and apparatus for carrying out the method
5,093,098	Secret Info has told me, this patent is useful connected with oxyhydrogen.
5,089,245	Catalyst for supported molten salt catalytic dehydrogenation of methanol
5,085,944	Rare earth metal-series alloys for storage of hydrogen
5,082,643	Secret Info has told me, this patent is useful connected with oxyhydrogen.
5,080,875	Process and apparatus for the purification of hydrogen gas
5,078,788	Method for the direct reduction of iron
5,075,268	Regeneration method for methanol-reforming catalyst
5,073,356	Integrated processes for the production of carbon monoxide
5,069,894	Process for preparing finely divided highly reactive magnesium and use thereof
5,069,716	Process for the production of liquid steel from iron containing metal oxides
5,066,476	Method of producing hydrogen-rich gas
5,064,629	Titanium-boron-oxide, synthetic materials based thereon and method of preparing the same
5,064,627	Continuous process for separating hydrogen in high purity from a gaseous hydrogen-containing mixture

5,064,467	Method and apparatus for the direct reduction of iron
5,062,936	Method and apparatus for manufacturing ultrafine particles
5,061,470	Silane production from hydride magnesium chloride
5,059,411	Process and apparatus for the production of carbon monoxide
5,059,404	Indirectly heated thermochemical reactor apparatus and processes
5,057,300	Bridged transition-metal complexes and uses thereof for hydrogen separation, storage and hydrogenation
5,055,282	Method of decomposing ammonia using a ruthenium catalyst
5,039,510	Steam reforming
5,039,503	CO H.sub.2 O catalytic conversions
5,030,661	Hydrogen production
5,030,440	Hydrogen production
5,028,389	Hydrogen storage materials of Zn-Ti-Cr-Fe
5,026,670	Low density metal hydride foams
5,026,536	Hydrogen production from hydrocarbon
5,021,233	Water gas shift reaction with alkali-doped catalyst
5,006,328	Method for preparing materials for hydrogen storage and for hydride electrode applications
5,004,862	Process for recycling and purifying condensate from a hydrocarbon or alcohol synthesis process
5,004,592	Steam reforming process
5,002,752	Process for hydroforming hydrocarbon liquids
5,001,284	Process for manufacturing fatty alcohols
4,999,178	Thermochemical cycle for splitting hydrogen sulfide
4,996,033	Catalytic method for concentrating isotopes
4,996,002	Tough and pores getters manufactured by means of hydrogen pulverization
4,995,235	Continuous process for separating hydrogen in high purity from a gaseous hydrogen-containing mixture
4,994,331	Fuel cell evaporative cooling using fuel as a carrier gas
4,994,093	Method of producing methanol synthesis gas
4,990,481	Catalyst for steam reforming
4,990,325	Process for synthesis of beryllium chloride dietherate
4,988,661	Steam reforming catalyst for hydrocarbons and method of producing the catalyst
4,988,490	Adsorptive process for recovering nitrogen from flue gas
4,986,978	Process for reforming impure methanol
4,985,231	Production of hydrogen-containing gas streams
4,985,230	Method of carrying out heterogeneous catalytic chemical processes
4,981,676	Secret Info has told me, this patent is useful connected with oxyhydrogen.
4,980,145	Liquid phase carbon monoxide shift process
4,976,942	Method for purifying gaseous hydrides
4,976,940	Method for producing H.sub.2 using a rotating drum reactor with a pulse jet heat source
4,976,938	Hydrogen isotope separation utilizing bulk getters
4,975,572	Apparatus for producing a monatomic beam of ground-state atoms
4,973,227	Method of producing a vacuum
4,963,339	Hydrogen and carbon dioxide coproduction
4,960,583	Secret Info has told me, this patent is useful connected with oxyhydrogen.

4,959,079	Steam reforming process with low fired duty
4,957,727	Process for the production of magnesium hydrides
4,957,726	Preparation of amine alanes and lithium aluminum tetrahydride
4,952,380	Partial oxidation process
4,950,460	Process for the production of hydrogen
4,950,309	Process for the conversion of toxic organic substances to useful products
4,946,667	Method of steam reforming methanol to hydrogen
4,946,646	Alloy for hydrogen storage electrodes
4,943,394	Method of storing radioactive waste without risk of hydrogen escape
4,938,946	Lunar hydrogen recovery process
4,938,685	Catalytic combustion
4,936,869	Liquid hydrogen polygeneration system and process
4,933,313	Catalyst for conversion of carbon monoxide
4,933,163	Process of removing hydrogen sulfide from exhaust gas
4,925,644	Partial oxidation of sulfur-containing solid carbonaceous fuel
4,916,104	Catalyst composition for decomposition of methanol
4,913,879	Hydrogen absorbing modified ZrMn.sub.2 -type alloys
4,910,008	Gas-gas phase contactor
4,908,199	CO H.sub.2 O catalytic conversions
4,906,448	CO H.sub.2 O catalytic conversions
4,902,579	Amorphous metal alloy compositions for reversible hydrogen storage
4,897,253	Catalytic generation of hydrogen from hydrocarbons
4,892,717	Gas treating process
4,891,950	Control system and method for a synthesis gas process
4,891,187	Plural absorption stages for hydrogen purification
4,889,700	Process and device for selective extraction of H.sub.2 S from an H.sub.2 S-containing gas
4,882,240	Closed cycle electrical power system
4,882,093	Process and installation for the treatment of solid organic waste contaminated by tritium
4,876,080	Hydrogen production with coal using a pulverization device
4,873,214	Carbonaceous material for production of hydrogen from low heating value fuel gases
4,871,524	Hydrogen purification process
4,869,894	Hydrogen generation and recovery
4,865,624	Method for steam reforming methanol and a system therefor
4,863,712	Catalysts for reforming hydrocarbon feedstocks
4,861,745	High temperature shift catalyst and process for its manufacture
4,859,434	Production of endothermic gases with methanol
4,859,427	Active metal bed
4,855,267	Regeneration of methanol dissociation catalysts
4,849,205	Hydrogen storage hydride electrode materials
4,849,155	Gas generating device
4,844,876	Process and device for selective extraction of H.sub.2 S from an H.sub.2 S-containing gas
4,842,844	Method of generating hydrogen

4,840,783	Process for the production of hydrogen by catalytic reforming of methanol with water vapor
4,839,085	Method of manufacturing tough and porous getters by means of hydrogen pulverization and getters produced thereby
4,836,898	Methane conversion reactor
4,832,934	Process for preparing halogen magnesium alanate and use thereof
4,832,913	Hydrogen storage materials useful for heat pump applications
4,828,684	Hydrogen production and catalyst demetallization process
4,828,606	Process for preparing intermetallic compounds or hydrides thereof
4,827,726	Method of an arrangement for generating hydrogen
4,824,658	Production of synthesis gas using convective reforming
4,824,657	Process for reducing silicon, germanium and tin halides
4,822,935	Hydrogasification of biomass to produce high yields of methane
4,822,521	Integrated process and apparatus for the primary and secondary catalytic steam reforming of hydrocarbons
4,816,121	Gas phase chemical reactor
4,810,485	Hydrogen forming reaction process
4,804,527	Method and composition for safely decomposing hydrazine
4,803,061	Partial oxidation process with magnetic separation of the ground slag
4,801,574	Secret Info has told me, this patent is useful connected with oxyhydrogen.
4,801,440	Partial oxidation of sulfur-containing solid carbonaceous fuel
4,801,438	Partial oxidation of sulfur-containing solid carbonaceous fuel
4,799,357	Closed loop regeneration system for generating mechanical energy and the method therefor
4,798,718	Method of preparing active magnesium-hydride of magnesium hydrogen-store systems
4,798,717	Production of elements and compounds by deserpentinization of ultramafic rock
4,790,985	Synthesis of sodium aluminum hydride
4,789,540	Catalytic hydrogen generator for use with methanol
4,788,051	Secret Info has told me, this patent is useful connected with oxyhydrogen.
4,783,329	Hydriding solid solution alloys having a body centered cubic structure stabilized by quenching near euctectoid compositions
4,780,300	Process for reforming methanol
4,778,670	Technical hydrogen
4,777,023	Preparation of silicon and germanium hydrides containing two different group 4A atoms
4,774,065	Method of generating hydrogen
4,769,225	System for exchange of hydrogen between liquid and solid phases
4,767,607	Method for production of high purity aluminum nitrides
4,752,546	Electrochemical cell
4,752,463	Method of and arrangement for generating hydrogen
4,749,558	Method of separating and purifying hydrogen
4,744,946	Materials for storage of hydrogen
4,743,576	Catalyst for the production of synthesis gas or hydrogen and process for the production of the catalyst
4,743,167	Devices for the sorption, storage and release of hydrogen isotopes

4,741,156	Process for igniting a regenerative soot filter in the exhaust gas connection of diesel engines
4,740,290	Process for thermal cracking of heavy oil
4,736,779	Method of manufacturing tough and porous getters by means of hydrogen pulverization and getters produced thereby
4,735,789	Process for the production of catalytically - active metallic glasses
4,735,733	Viscosifier, its uses, and its manufacture
4,733,528	Energy recovery
4,732,821	Nickel-based electrical contact
4,729,891	Hydrogen production and catalyst demetallization process
4,728,580	Amorphous metal alloy compositions for reversible hydrogen storage
4,728,507	Preparation of reactive metal hydrides
4,728,506	Start-up method for ammonia plants
4,725,419	Silane production from magnesium hydride
4,725,381	Hydrogen streams
4,721,697	Substance for reversibly absorbing and desorbing hydrogen
4,721,611	Hydrogen production
4,717,629	Compact of hydrogen adsorption alloy
4,717,551	Titanium-based alloy used as a gettering material
4,716,736	Metal assisted carbon cold storage of hydrogen
4,716,088	Activated rechargeable hydrogen storage electrode and method
4,713,234	Process and apparatus for conversion of water vapor with coal or hydrocarbon into a product gas
4,711,773	Process for the production of hydrogen
4,707,351	Catalyst and catalytic process
4,705,635	Process for enriching and separating oxides of heavy hydrogen isotopes from acid, aqueous solutions or other aqueous streams
4,704,267	Process and apparatus for using a hydride-forming alloy to store hydrogen
4,704,137	Process for upgrading water used in cooling and cleaning of raw synthesis gas
4,702,978	Electrochemical cell
4,702,903	Method and apparatus for gas separation and synthesis
4,699,856	Electrochemical cell
4,699,775	Catalyst and method for producing hydrogen gas from carbon monoxide and water
4,696,809	Hydrogen generating method
4,696,806	Production of hydrogen from ammonia
4,696,806	Metal hydride adsorption process for hydrogen purification
4,695,446	Method of separating and purifying hydrogen
4,693,883	Ammonia utilization process
4,693,875	Method of separating and purifying hydrogen
4,692,322	Process for producing a product gas containing carbon oxides and hydrogen from methanol
4,690,814	Process for the production of hydrogen
4,687,650	Methods of extracting hydrogen from a gas
4,687,644	Secret Info has told me, this patent is useful connected with oxyhydrogen.
4,683,218	Chlorine resistant shift gas catalyst
4,676,972	Process for the conversion of alcohols to gaseous products

4,673,547	Secret Info has told me, this patent is useful connected with oxyhydrogen.
4,673,528	Secret Info has told me, this patent is useful connected with oxyhydrogen.
4,67,3547	Secret Info has told me, this patent is useful connected with oxyhydrogen.
4,668,825	Production of methanethiol from H.sub.2 S and CO
4,668,502	Method of synthesis of gaseous germane
4,664,904	Process for the performance of chemical reaction with atomic hydrogen
4,663,144	Water-splitting cycle with graphite intercalation compounds
4,663,143	Hydrogen storage materials of CeNi.sub.5-x Mn.sub.x alloys
4,661,415	Hydrogen absorbing zirconium alloy
4,659,554	Low-energy process for separation of hydrogen isotopes
4,657,747	Method of producing hydrogen and material used therefor
4,656,023	Hyperstoichiometric zirconium-titanium-chromium iron alloys
4,656,013	Process for producing germanes
4,650,660	Water-splitting cycle with graphite intercalation compounds
4,642,125	Carbonaceous material and methods for making hydrogen and light hydrocarbons from such materials
4,640,766	Process for the preparation of hydrocarbons
4,639,363	Process for preparing amorphous phases of intermetallic compounds by a chemical reaction
4,637,927	Process for accelerating of amorphization of intermetallic compounds by a chemical reaction using lattice defects
4,634,454	Secret Info has told me, this patent is useful connected with oxyhydrogen.
4,631,266	Catalyst for conversion of methanol
4,631,182	Process for preparation of a reducing gas
4,631,170	Calcium-nickel-misch metal-aluminum quaternary alloy for hydrogen storage
4,629,720	Substance for reversibly absorbing and desorbing hydrogen
4,629,612	Reaction mass, method for the manufacture thereof and use thereof
4,623,532	Catalysts for synthesis of ammonia
4,623,531	Process for producing silane
4,622,924	Hydrogen engine
4,621,417	Hydrogen-stored electrode for use in battery and manufacturing method
4,613,584	Catalyst for the production of synthesis gas or hydrogen and process for the production of the catalyst
4,609,599	New lanthanum and nickel based alloys, their manufacture and their electrochemical applications
4,605,547	Continuous hydrogenation of lithium into lithium hydride
4,604,225	Refractory oxide hosts for a high power, broadly tunable laser with high quantum efficiency and method of making same
4,600,660	Foil material for the storage of hydrogen
4,600,529	Dehydrogenation of alcohols using alkali carbonate catalysts
4,600,525	Hydrogen sorbent flow aid composition and containment thereof
4,598,062	Iron oxide-chromium oxide catalyst and process for high temperature water-gas shift reaction
4,597,776	Hydropyrolysis process
4,592,905	Conversion of hydrogen sulfide to sulfur and hydrogen
4,592,903	Low severity hydrocarbon steam reforming process
4,588,577	Method for generating hydrogen

4,585,646	Method for feeding solids to a controlled environment
4,583,993	Process for the production of carbon monoxide and hydrogen from carbonaceous material
4,576,640	Hydrogen storage material
4,575,383	Process for producing acetylene using a heterogeneous mixture
4,567,033	Low-energy method for freeing chemically bound hydrogen
4,567,032	Zirconium-manganese-iron alloys
4,565,686	Method of storing hydrogen using nonequilibrium materials and system
4,564,516	Ammonia-based catalyst for water-gas shift reaction
4,564,515	Method for separating at least one heavy isotope from a hydrogen containing medium
4,563,343	Catalyzed alkali metal aluminum hydride production
4,563,204	Method and apparatus for withdrawing a bottom product from a low temperature rectifying column
4,560,547	Production of hydrogen from oil shale
4,556,551	Hydrogen storage materials of zirconium-chromium-iron and titanium alloys characterized by ZrCr.sub.2 stoichiometry
4,555,395	Low-energy method for freeing chemically bound hydrogen
4,554,153	Process for the production of magnesium hydrides
4,554,152	Method of preparing active magnesium-hydride or magnesium hydrogen-storer systems
4,553,981	Enhanced hydrogen recovery from effluent gas streams
4,552,750	Process for the reaction of carbon monoxide with steam, with formation of carbon dioxide and hydrogen and use of a catalyst for this purpose
4,552,741	Method and apparatus for manufacturing synthesis gas
4,551,400	Hydrogen storage materials and methods of sizing and preparing the same for electrochemical applications
4,547,356	Method of generating hydrogen and using the generated hydrogen
4,545,976	Hydrocarbon steam reforming using series steam superheaters
4,544,527	Hydrogen from ammonia
4,544,459	Process for obtaining hydrogen and oxygen from water
4,543,434	Process for producing liquid hydrocarbon fuels
4,543,246	Hydrogen generator
4,542,114	Process for the recovery and recycle of effluent gas from the regeneration of particulate matter with oxygen and carbon dioxide
4,540,563	Hydrogen Production
4,537,761	Hydrogen Storages System
4,536,196	Coated diffusion membrane and its use
4,533,775	Process for the upgrading of lower alcohols to higher molecular weight alcohols
4,533,539	Secret Info has told me, this patent is useful connected with oxyhydrogen.
4,530,918	Catalysts and method of their preparation
4,529,580	Alkali metal aluminum hydride production
4,528,176	Sodium aluminum hydride production
4,524,058	Process for the preparation of a hydrogen-rich gas
4,522,940	Method of preparing a catalyst and catalyst prepared by the method
4,522,802	Steam reforming utilizing iron oxide catalyst

4,519,996	Method for enriching and separating heavy hydrogen isotopes from substance streams containing such isotopes by means of isotope exchange
4,517,171	Process for producing liquid hydrocarbon fuels
4,514,377	Process for the exchange of hydrogen isotopes between streams of liquid water and gaseous halohydrocarbon and an apparatus therefor
4,512,966	Hydride production at moderate pressure
4,512,965	Hydrogen storage materials of hyperstoichiometric alloys
4,507,263	Method for preparing improved porous metal-hydride compacts
4,504,460	Method and plant for obtaining deuterium-enriched water
4,503,029	Steam reforming utilizing high activity catalyst
4,500,505	Synthesis of H.sub.2 and CH.sub.4 from H.sub.2 S and CO
4,497,775	Apparatus for storing hydrogen isotopes
4,496,531	Method and plant for obtaining deuterium-enriched water
4,496,530	Process for the production of hydrogen and carbonyl sulfide from hydrogen sulfide and carbon monoxide using a metal intercalate of graphite as a catalyst
4,496,529	Preparation of metal cyanates from alkyl carbamates
4,496,373	Diffusion membrane and process for separating hydrogen from gas mixture
4,496,370	Zinc oxide-char gasification process
4,494,965	Device utilized for separation of hydrogen isotopes from a gas mixture for separation of isotopes contained in a hydrogen isotope mixture
4,491,573	Process for heating hydrogen
4,490,349	Hydrogen production
4,490,348	Method for effecting hydrogen sorption and dissociation on an adsorbent metal
4,490,343	Method for the separation of chlorosilanes from a gaseous mixture containing hydrogen chloride and hydrogen
4,489,051	Synthesis of complex beryllium hydrides
4,489,050	Method of preparing a hydrogen-absorbing alloy
4,489,049	Hydrogen production
4,489,048	Method for effecting hydrogen sorption and dissociation on an adsorbent metal
4,481,183	Synthesis of complex beryllium hydrides
4,481,182	Synthesis of complex beryllium hydrides
4,481,181	Hydrogen production from in situ partial burning of H.sub.2 S
4,478,814	Process for producing hydrogen and carbonyl sulfide from hydrogen sulfide and carbon monoxide using a heteropolyanionic metal complex catalyst
4,478,813	Production of complex beryllium hydrides
4,477,415	Apparatus for storing and producing hydrogen from a solid compound
4,476,683	Energy efficient multi-stage water gas shift reaction
4,476,105	Process for photosynthetically splitting water
4,474,592	Apparatus for producing liquid para-hydrogen
4,473,543	Autothermal reforming catalyst and process
4,470,961	Utilization of impure steam and recovery of deuterium therefrom
4,469,815	Catalyst and method of preparation
4,469,665	Production of ammonia from purified ammonia synthesis gas
4,461,755	Apparatus for storing and producing hydrogen from a solid compound
4,460,444	Hydriodic acid-anode-depolarized hydrogen generator
4,457,898	Managanese compounds and sorption of gases using manganese compounds
4,457,891	Hydrogen storage alloy

4,456,584	Synthesis of sodium aluminum hydride
4,451,578	Iron oxide catalyst for steam reforming
4,451,445	Method for controlled hydrogen charging of metals
4,447,410	Process for the conversion of carbon monoxide into hydrogen and carbon dioxide
4,447,409	Secret Info has told me, this patent is useful connected with oxyhydrogen.
4,446,121	Material for hydrogen absorption and desorption
4,446,101	Storage material for hydrogen
4,444,737	Process for separating and recovering hydrogen isotope
4,444,727	Process for producing hydrogen and sulfur from hydrogen sulfide
4,441,923	Integrated process using non-stoichiometric sulfides or oxides of potassium for making less active metals and hydrocarbons
4,440,737	Room temperature reaction of vanadium-based alloys with hydrogen
4,440,736	Titanium-based body-centered cubic phase alloy compositions and room temperature hydride-forming reactions of same
4,440,733	Thermochemical generation of hydrogen and carbon dioxide
4,439,412	Process for producing hydrogen from hydrogen sulphide in a gas fluidized bed reactor
4,439,412	Hydrogen gas purification apparatus
4,437,954	Fuels production by photoelectrolysis of water and photooxidation of soluble biomass materials
4,436,530	Process for gasifying solid carbon containing materials
4,435,376	Fibrous carbon production
4,435,374	Method of producing carbon monoxide and hydrogen by gasification of solid carbonaceous material involving microwave irradiation
4,433,633	Hydrogen production
4,433,063	Hydrogen sorbent composition
4,432,960	Thermochemical method for producing hydrogen from hydrogen sulfide
4,432,892	Process for the safe intermediate and final storage of tritium
4,431,562	Hydrogen-containing silicic substance, process for producing the same and use thereof
4,431,561	Fuels production by photoelectrolysis of water and photooxidation of soluble biomass materials
4,427,512	Water decomposition method and device using ionization by collision
4,426,370	Method for the preparation of deuterium-enriched water in the preparation of hydrogen
4,425,318	Hydriding body-centered cubic phase alloys at room temperature
4,421,734	Sulfuric acid-sulfur heat storage cycle
4,421,718	Alloy for occlusion of hydrogen
4,420,332	Process for the production of reduced iron and thermal cracking of heavy oils
4,419,451	Integrated process using non-stoichiometric sulfides or oxides of potassium for making lessactive metals and hydrocarbons
4,415,484	Autothermal reforming catalyst
4,414,195	Method for the preparation of deuterium-enriched water
4,414,182	Process for producing hydrogen
4,410,505	Hydrogen iodide decomposition
4,410,504	Method of producing high density carbon
4,409,180	Process for manufacturing rare earth intermetallic hydridable compounds

4,407,238	Methanol dissociation using a copper-chromium-manganese catalyst
4,406,874	Secret Info has told me, this patent is useful connected with oxyhydrogen.
4,405,594	Hydrogen iodide decomposition
4,404,170	Controlled gas generator system
4,402,933	Process for manufacturing rare earth intermetallic hydridable compounds
4,400,348	Alloy for occlusion of hydrogen
4,400,309	Process for activating a steam reforming catalyst and the catalyst produced by the process
4,399,120	Hydrogen-water isotopic exchange process
4,397,834	Method of gettering hydrogen under conditions of low pressure
4,396,591	Photo separatory nozzle
4,396,589	Alkali metal complex compounds, and their use in the hydrogenation and nitridation of alkali metals
4,395,386	Apparatus for isotope exchange reaction
4,395,355	Process and apparatus for treating a pressurized feed stream capable of undergoing an endothermic reaction
4,394,293	Catalyst for the photolytic production of hydrogen from water
4,391,794	Process and apparatus for hydrogen production
4,391,793	Plant for thermochemical water dissociation by solar energy
4,389,335	Catalyst for carbon monoxide conversion in sour gas4389326Method of storing hydrogen in intimate mixtures of hydrides of magnesium and other metals or alloys
4,389,326	Method of storing hydrogen in intimate mixtures of hydrides of magnesium and other metals or alloys
4,389,239	Method and pressure container for producing hydrogen-storage metal granulates
4,386,974	Hydrogen storage material
4,385,726	Method of preheating motor vehicles with internal combustion engines
4,383,982	Ammonia production process
4,383,837	Efficient methane production with metal hydrides
4,381,206	Secret Info has told me, this patent is useful connected with oxyhydrogen.
4,376,759	Instantaneous start and stop gas generator
4,376,097	Hydrogen generator for motor vehicle
4,376,066	Method for preparing a catalyst for an isotopic exchange column
4,375,257	Efficient methane production with metal hydrides
4,371,500	Cyclic process for making hydrogen
4,370,488	Alkali metal complex compounds
4,370,163	Hydrogen storage alloy and process for making same
4,368,169	Pyrochemical processes for the decomposition of water
4,368,143	Composition for the storage of hydrogen and method of making the composition
4,367,166	Steam reforming catalyst and a method of preparing the same
4,367,077	Integrated hydrogasification process for topped crude oil
4,364,897	Multi-step chemical and radiation process for the production of gas
4,362,690	Method of generating hydrogen and using the generated hydrogen
4,360,505	Recovering hydrogen from gas stream using metal hydride
4,359,396	Hydride of beryllium-based intermetallic compound
4,359,368	Deuterium exchange between hydrofluorocarbons and amines
4,358,432	Material for hydrogen absorption and desorption

4,358,429	Oxygen stabilized zirconium vanadium intermetallic compound
4,358,316	Alloys for hydrogen storage
4,358,291	Apparatus for generating hydrogen
4,356,163	Process for the production of hydrogen
4,354,982	Production of organolithium compounds and lithium hydride
4,351,742	Method for the production of synthesis gas
4,350,673	Method of storing hydrogen
4,349,527	Iron-titanium-niobium alloy
4,344,847	Process for obtaining energy, soft water and by-products from aqueous substances
4,342,738	Composition for the storage of hydrogen and method of making the composition
4,341,651	Compositions and methods for generation of gases containing hydrogen or
4,340,580	Method of producing hydrogen
4,338,292	Production of hydrogen-rich gas
4,338,291	Process for producing hydrogen with viologen cation radical using metal complex of macrocyclic polydentate compound as catalyst
4,335,093	Process of converting wind energy to elemental hydrogen and apparatus therefore
4,332,775	Hydrogen generator utilizing solar energy to dissociate water
4,332,650	Method of producing hydrogen
4,331,451	Catalytic gasification
4,330,523	Decomposition of water
4,327,071	Method of preparing potassium hydride
4,324,777	Material and method to dissociate water at controlled rates
4,324,695	Catalyst compositions of transition metal carbonyl complexes intercalcated with lamellar materials
4,323,543	Sorption of gases
4,321,250	Rhodium-containing perovskite-type catalysts
4,320,100	Process and apparatus for the production of carbon monoxide
4,318,897	Process for preparing hydrided iron-vanadium alloys
4,317,659	Production of hydrogen, acetylene and ammonia gases from lithium reaction with hydrocarbon materials
4,316,880	Process for producing carbon monoxide and hydrogen from methanol
4,315,786	Solid propellant hydrogen generator
4,313,925	Decomposition of water
4,313,916	Enhanced hydrogen recovery from effluent gas streams
4,313,818	Hydrocracking process utilizing high surface area catalysts
4,310,503	Hydrogen production by multistaged intermediate oxidation-reduction
4,310,334	Process for obtaining energy, soft water and by-products from aqueous substances
4,309,274	Preparation of FCC charge from residual fractions
4,309,230	Process for reproducibly preparing titanium subhydride
4,308,248	Hydrogen production by multistaged intermediate oxidation-reduction
4,308,173	Catalyst for cracking heavy hydrocarbons
4,306,906	Method of making metallic amalgam
4,305,846	Solution preparation
4,304,593	Decomposition of water

4,302,436	Method of regenerating disproportionated hydrides
4,302,434	Embrittling of glass alloys by hydrogen charging
4,300,946	Granulating and activating metal to form metal hydride
4,298,460	Methods of producing fuels from solid materials
4,298,439	Material and method to dissociate water
4,289,744	Material and method to dissociate water
4,287,169	Water dissociation method and material
4,287,051	Disposition of a high nitrogen content oil stream
4,285,837	Catalyst for steam reforming of hydrocarbons
4,283,226	Method of preparing titanium iron-containing material for hydrogen storage
4,279,875	Method of releasing fission gases from irradiated fuel
4,278,650	Material and method to dissociate water
4,278,466	Titanium alloy composition and method for the storage of hydrogen
4,276,279	Water dissociation method and material
4,274,839	Method for producing oxygen and hydrogen from water
4,273,748	Purification of gas mixtures
4,272,345	Energy conservation technique
4,269,818	Process for gasification of coal and organic solid wastes
4,264,567	Method for producing a hydrogen-containing gas
4,264,362	Supercorroding galvanic cell alloys for generation of heat and gas
4,261,955	Method of producing hydrogen
4,259,312	Process and apparatus for catalytically reacting a reducing gas and water vapor
4,259,209	Catalyst for concentrating hydrogen isotopes and process for producing a support therefor
4,259,110	Process for storing of hydrogen and the use thereof, particularly in engines
4,258,026	Hydrogen iodide decomposition
4,257,920	Catalyst containing a noble metal of the VIIIth group, copper oxide, zinc oxide and a rare earth metal, its manufacture and use in the conversion of carbon monoxide
4,254,094	Process for producing hydrogen from synthesis gas containing COS
4,249,940	Mischmetal-nickel-iron hydrogen storage compound
4,249,654	Granulating and activating metal to form metal hydride
4,248,605	Gasification of coal liquefaction residues
4,247,327	Alloy strengthening by hydridation
4,244,810	Fluidized catalytic cracking process for increased hydrogen production
4,242,315	Hydrides of the formula AB. sub. n H. sub. m
4,242,186	Low pressure tritiation of mol ecules
4,240,805	Process for producing hydrogen containing gas
4,237,105	Vertical type porous membrane hydrogen generator
4,235,863	Hydrogen storage apparatus
4,235,605	Synthesizing gas from coal via synergetic reactions with steam and sulfur
4,235,605	Hydrides of the formula AB. sub. n H. sub. m
4,233,187	Catalyst and process for steam-reforming of hydrocarbons
4,233,180	Process for the conversion of carbon monoxide
4,233,127	Process and apparatus for generating hydrogen and oxygen using solar energy
4,233,127	Method of and cell for generating hydrogen

4,231,891	Solid compositions for generation of gases containing a high percentage of hydrogen or its isotopes
4,230,682	Cyclic thermochemical process for producing hydrogen using ceriumitanium compounds
4,229,196	Atomic hydrogen storage method and apparatus
4,228,145	Hydrogen storage material
4,228,034	Catalytically active mass for the exchange of hydrogen isotopes between streams of gaseous hydrogen and liquid water
4,226,845	Water gas shift reaction and in the hydroformylation and hydrohydroxy formylation reactions
4,224,298	Reforming of hydrocarbons
4,224,140	Process for producing cracked distillate and hydrogen from heavy oil
4,223,001	Production of hydrogen from carbon monoxide and water
4,222,770	Alloy for occlusion of hydrogen
4,221,774	Isotope enrichment systems
4,220,518	Method for preventing coking in fluidized bed reactor for cracking heavy hydroarbon oil
4,217,332	Process for exchanging hydrogen isotopes between gaseous hydrogen and water
4,216,199	Hydrogen production from carbonaceous fuels using intermediate oxidation-reduction
4,216,198	Self-regenerating method and system of removing oxygen and water impurities from hydrogen gas
4,216,198	Process and apparatus for generating hydrogen and oxygen using solar energy
4,216,123	Catalyst for steam reforming of hydrocarbons
4,216,110	Method of making crack-free zirconium hydride
4,216,110	Method of making crack-free zirconium hydride
4,214,699	Parking heater and method using hydrides in motor vehicles powered by hydrogen
4,213,953	Process for the preparation of ammonia and heavy water
4,211,537	Hydrogen supply method
4,208,397	Semi-regenerative reforming process providing continuous hydrogen production
4,207,211	Catalyst for steam reforming of hydrocarbons and process of preparing the catalyst
4,207,167	Combination hydrocarbon cracking, hydrogen production and hydrocracking
4,207,095	Material and method for obtaining hydrogen by dissociation of water
4,206,038	Hydrogen recovery from gaseous product of fluidized catalytic cracking
4,205,056	Process for ortho-para-hydrogen conversion
4,203,963	Staged vaporization of liquid hydrocarbon fuels
4,202,865	On-line regeneration of hydrodesulfurization catalyst
4,202,744	Production of hydrogen
4,200,624	Combined hydrogen storage and production process
4,200,623	Process for the preparation of a hydrogen reserve
4,199,437	Process for steam dealkylation of aromatic hydrocarbons
4,199,436	Process for steam-dealkylating alkylaromatic hydrocarbons
4,198,379	Nitrogen oxide pollution abatement using catalytic combustion
4,197,281	Production of ammonia synthesis gas from solid carbonaceous fuels

4,196,226	Alkali metal aluminum phosphate
4,195,989	Hydrogen storage material
4,193,978	Production of hydrogen
4,193,827	Combined hydrogen storage and production process
4,192,850	Dual temperature exchange systems
4,191,626	Apparatus for finishing and upgrading of heavy water
4,190,641	Method for producing hydrogen
4,188,370	Thermochemical method for producing hydrogen from water
4,186,181	Process for the production of hydrogen
4,182,748	Material and method for obtaining hydrogen by dissociation of water
4,182,746	Carbon monoxide manufacture
4,181,503	Process for alternately steam reforming sulfur containing hydrocarbons that vary in oxygen content
4,178,987	Process for the preparation of a hydrogen reserve
4,177,252	Low temperature shift conversion process
4,175,115	Process for the production of synthesis gas by the catalyzed decomposition of methanol
4,175,111	Atomic hydrogen storage
4,175,013	Method of generating hydrogen and oxygen from water
4,173,625	Hydrogen purification and storage system
4,173,620	Extraction method of tritium
4,172,017	Material and method for obtaining hydrogen and oxygen by dissociation of water
4,169,884	Hydrogen production from water using copper and barium hydroxide
4,166,843	High yield solid propellant hydrogen generators
4,166,834	Air injector nozzle for secondary reformer
4,166,101	Process of the preparation of a hydrogen-rich gas and the catalyst used in the process
4,163,666	Hydrogen charged alloys of Zr (A.sub.1-x B. sub.x) sub.2 and method of hydrogen storage
4,163,666	Hydrogen charged alloys of Zr (A.sub.1-x B. sub. x) sub.2 and method of hydrogen storage
4,162,302	Decomposition of water
4,162,290	Parallel steam reformers to provide low energy process
4,161,402	Nickel-mischmetal-calcium alloys for hydrogen storage
4,161,401	Nickel-calcium alloy for hydrogen storage
4,161,393	Shift conversion of raw gas from gasification of coal
4,160,816	Process for storing solar energy in the form of an electrochemically generated compound
4,160,014	Hydrogen storage material
4,157,927	Amine-boranes as hydrogen generating propellants
4,157,270	Hydrogen charged alloys of Zr (A.sub.1-x B. sub. x) sub.2 and method of hydrogen storage
4,155,712	Miniature hydrogen generator
4,153,671	Catalytic gas purification process
4,153,484	Hydrogen storage material
4,152,407	Process and apparatus for exothermic reactions
4,152,401	Chelated lithium aluminum compounds

4,152,145	Mischmetal-nickel-aluminum alloys
4,151,107	Catalysis of water-gas shift reaction
4,147,536	Alloy for occlusion of hydrogen
4,145,405	Hydrogen production from water using copper and barium hydroxide
4,145,402	Miniature hydrogen generator
4,143,123	Process for the exchange of hydrogen isotopes between streams of gaseous hydrogen and liquid water
4,143,122	Decomposition of water
4,143,120	Method of removing nitric oxide from gases
4,142,988	Carbon monoxide shift process
4,142,962	Hydrogenation and hydrocracking with highly dispersed supported nickel catalysts
4,142,300	Lanthanum nickel aluminum alloy
4,139,439	Process for producing hydrogen from synthesis gas containing COS
4,137,298	Production of a hydrogen-rich gas from a hydrogen, carbon monoxide and carbon dioxide-containing fuel gas
4,134,491	Hydride storage containment
4,134,490	Gas storage containment
4,133,426	Hydride storage containment
4,131,569	Oxidic catalyst for the conversion of water gas
4,129,523	Catalysts containing active metallic copper
4,129,523	Catalysts containing active metallic copper
4,127,644	Process for hydrogen production from water
4,126,668	Production of hydrogen
4,126,667	Process for the exchange of hydrogen isotopes using a catalyst packed bed assembly
4,124,629	Thermally stable coprecipitated catalysts useful for methanation and other reactions
4,120,663	Hydrogen generating device
4,115,074	Gasification process
4,113,589	Process for the production of hydrogen and oxygen from water
4,111,689	Method of storing hydrogen
4,110,425	Form retaining hydrogen-storing material
4,110,256	Catalyst for reforming fuel and method for producing same
4,108,605	Hydrogen purification and storage system
4,107,405	Electrode materials based on lanthanum and nickel, and electrochemical uses of such materials
4,107,282	Acetylide catalyst and process of producing hydrogen
4,107,076	Catalyst system for catalyzing the water gas shift reaction
4,105,755	Hydrogen production
4,105,591	Method of preparing and filtering coprecipitated nickel-alumina catalysts
4,101,645	Secret Info has told me, this patent is useful connected with oxyhydrogen.
4,101,449	Catalyst and its method of preparation
4,101,376	Tubular heater for cracking hydrocarbons
4,098,875	Method for thermochemical production of hydrogen from water
4,096,639	Nickel Mischmetal-calcium alloys for hydrogen storage
4,094,962	Form retaining hydrogen-storing material

4,092,405	Separation of deuterium from hydrogen
4,091,086	Process for production of hydrogen
4,091,086	Process for production of hydrogen
4,091,082	Hydrocarbon soluble catalyst containing dinitrogen or dihydrogen transition metal complex
4,089,941	Steam reformer process for the production of hydrogen
4,089,940	Hydrogen production
4,089,939	Process for the production of hydrogen from water
4,088,450	Hydrogen generator
4,087,373	High intensity energy transfer technique
4,087,349	Hydroconversion and desulfurization process
4,085,061	Tritiated water treatment process
4,084,024	Process for the thermochemical production of hydrogen
4,081,524	Manufacture of complex hydrides
4,081,523	Acetylide catalyst and process of producing hydrogen
4,081,519	Process for oxidation of carbon monoxide with inorganic oxidizing agents
4,081,339	Method of deuterium isotope separation and enrichment
4,079,523	Iron-titanium-mischmetal alloys for hydrogen storage
4,078,904	Production of hydrogen rich gas by combined steam reforming and intermediate oxidation-reduction
4,077,788	Process for the production of silicon of high purity
4,075,313	Process for producing hydrogen and oxygen from water
4,075,312	Process for recovering evolved hydrogen enriched with at least one heavy hydrogen isotope
4,072,514	Magnesium composites and mixtures for hydrogen generation and method for manufacture thereof
4,071,608	Dissociation of water into hydrogen and oxygen using solar energy
4,071,330	Steam reforming process and apparatus therefor
4,069,304	Hydrogen production by catalytic coal gasification
4,069,303	Alloy useful as hydrogen storage material
4,067,958	Production of a hydrogen-rich gas from a co-containing fuel gas
4,066,741	Process for the production of hydrogen by the thermal decomposition of water
4,066,739	Dissociation of water into hydrogen and oxygen using solar energy
4,064,226	Method for the generation of hydrogen
4,064,225	Method for producing hydrogen or deuterium from storable solid propellant compositions based on complex metal boron compounds
4,060,466	Process for preparing hydrogen from water
4,059,416	Chemical reaction process utilizing fluid-wall reactors
4,058,440	Concurrent separation of lithium and hydrogen isotopes
4,056,607	Thermochemical process for the production of hydrogen and oxygen from water
4,056,602	High temperature chemical reaction processes utilizing fluid-wall reactors
4,055,632	Method for the generation of hydrogen
4,054,644	Water gas shift process
4,053,576	System for obtaining hydrogen and oxygen from water using solar energy
4,048,292	Separation of deuterium from hydrogen
4,048,087	Crystallizing solution and method of preparation thereof
4,046,869	Steam reforming process

4,045,546	Process for the preparation of hydrogen
4,045,546	Concurrent separation of lithium and hydrogen isotopes
4,045,545	Manufacture of complex hydrides
4,045,285	Plant for the production of hydrogen through utilization of heat energy obtained from a gas-cooled nuclear reactor
4,044,117	High temperature chemical reaction processes utilizing fluid-wall reactors
4,043,809	High temperature superconductors and method
4,041,136	Process for the production of silane
4,040,410	Thermal energy storage systems employing metal hydrides
4,039,651	Process for closed-cycle thermochemical production of hydrogen and oxygen from water
4,039,426	Process for producing fluid fuel from coal
4,038,035	Apparatus for enriching hydrogen with deuterium
4,036,944	Thermochemical process for the production of hydrogen and oxygen from water
4,036,720	Hydrogen isotope separation
4,036,689	Multichamber hydrogen generating plant heated by nuclear reactor cooling gas
4,033,133	Start up system for hydrogen generator used with an internal combustion engine
4,032,618	System for obtaining hydrogen and oxygen from water using solar energy
4,030,890	Hydrogen sorbent composition and its use; Solar power system
4,029,754	Process for producing hydrogen and oxygen
4,027,003	Thermochemical production of hydrogen and oxygen from water
4,025,612	Process for the production of hydrogen
4,025,560	Process for the exchange of hydrogen isotopes between streams of
4,025,408	Deuterium separation by infrared-induced addition reaction
4,025,318	Gasification of hydrocarbon feedstocks
4,024,230	Producing hydrogen and oxygen by decomposition of water via the thermochemical iron-chlorine system
4,022,705	Gas generating compositions
4,021,366	Production of hydrogen-rich gas
4,021,362	Gas generating system for chemical lasers
4,021,298	Conversion of coal into hydrocarbons
4,021,234	Method for removing impurities in liquid metal
4,021,183	Arrangement and method of burner ignition
4,019,896	Process for closed-cycle thermochemical production of hydrogen and oxygen from water
4,019,868	Solar power system
4,017,584	Process for the recovery of aluminum trichloride
4,017,414	Producing hydrogen and oxygen by decomposition of water via the thermochemical iron-chlorine system
4,013,781	Process for obtaining hydrogen and oxygen from water using iron and chlorine
4,011,305	Process for obtaining hydrogen and oxygen from water
4,011,148	Method of electrolysis
4,010,249	Process for the preparation of hydrogen
4,010,248	Process for producing trialkali metal aluminum hexahydride
4,010,187	Chemical process
4,009,006	Water to fuel converter
4,008,174	CO purification process

4,008,163	Method of preparing a saturated fluid mixture
4,007,257	Alkali metal hydride formation
4,007,015	Apparatus useful for the production of hydrogen
4,006,095	Stable hydrocarbon solutions of aluminum hydride
4,005,185	Powdered metal source for production of heat and hydrogen gas
4,005,185	Method for hydrogen generation
4,005,184	Thermochemical process for the production of hydrogen using chromium and barium compound
4,002,729	Method for hydrogen generation
4,002,726	Thermochemical process for the production of hydrogen using chromium and barium compound
3,998,942	Process for producing hydrogen and oxygen from water
3,998,941	Preparation of alkali metal hydrides
3,996,343	Process for thermochemically producing hydrogen
3,996,342	Method for thermochemical production of hydrogen from water
3,995,017	Catalyst for hydrogen-amine D exchange
3,995,016	Solar hydrogen generator
3,995,012	Process for thermochemically producing hydrogen
3,993,732	Method for thermochemical production of hydrogen from water
3,993,577	Process for producing hydrogen and oxygen from water
3,992,507	Method of recycling lithium borate to lithium borohydride through diborane
3,992,167	Low temperature refrigeration process for helium or hydrogen mixtures using mixed refrigerant
3,989,484	Separation of isotopes by cyclical processes
3,988,425	Process of producing carbon monoxide from light hydrocarbons
3,987,152	Stable unsubstituted sulfonium salts
3,985,866	Method for production of heat and hydrogen gas
3,985,865	Method for the generation of hydrogen
3,985,520	Process of producing hydrogen and oxygen from H.sub.2 O in a thermochemical cycle
3,984,530	Methane-methanol cycle for the thermochemical production of hydrogen
3,984,519	Process to transport carbon from a zone to another one, by means of a carrier having a graphite structure
3,982,910	Hydrogen-rich gas generator
3,981,976	Process for hydrogen isotope concentration between liquid water and hydrogen gas
3,979,505	Method for making hydrogen
3,979,503	Method and apparatus for processing fluid materials particularly in the preparation of samples for radioactive isotope tracer studies
3,978,821	Method for production of heat and hydrogen gas
3,977,990	Controlled generation of cool hydrogen from solid mixtures
3,975,913	Method for the generation of hydrogen
3,971,847	Hydrogen-rich gas generator
3,971,846	Preparation of beryllium hydride and aluminum hydride
3,970,745	Method for producing hydrogen from water
3,969,495	Thermochemical production of hydrogen
3,969,493	Thermochemical process for manufacture of hydrogen and oxygen from water

3,965,253	Process for producing hydrogen
3,965,252	Hydrogen production
3,963,831	Process for the manufacture of alkali metal hydrides in coarse powder form
3,963,830	Thermolysis of water in contact with zeolite masses
3,962,411	Method for catalytically cracking a hydrocarbon fuel
3,961,037	Process for forming hydrogen and carbon dioxide using a catalyst consisting essentially of oxides of copper, zinc and aluminum or magnesium
3,959,454	Production of sodium aluminum hydride
3,957,962	Process for the preparation of hydrogen-rich gas
3,957,961	Secret Info has told me, this patent is useful connected with oxyhydrogen.
3,957,956	Method for producing hydrogen from water
3,957,483	Thermolysis of water in contact with zeolite masses
3,957,483	Magnesium composites and mixtures for hydrogen generation and method for manufacture thereof
3,955,941	Hydrogen rich gas generator
3,948,700	Method for producing high temperature hydrogen
3,948,699	Hydrogen gas generators for use in chemical lasers
3,947,551	Ammonia synthesis
3,943,236	Reforming process for carbon monoxide
3,942,511	Sandwiched structure for production of heat and hydrogen gas
3,940,912	Thermochemical process for manufacture of hydrogen and oxygen from water
3,940,474	Generation of hydrogen
3,939,257	Process for producing hydrogen from water
3,939,188	Preparation of zerovalent phosphine substituted rhodium compounds and their use in the selective carbonylation of olefins
3,932,600	Process for the generation of hydrogen
3,932,599	Method of obtaining hydrogen from steam
3,931,395	Process for generating hydrogen gas
3,929,980	Method for preparation of deuterium by isotope separation
3,929,979	Secret Info has told me, this patent is useful connected with oxyhydrogen.
3,928,550	Process for producing hydrogen from water
3,928,549	Generation of hydrogen
3,917,810	Hydrogen isotope separation
3,895,102	Process for the generation of hydrogen
3,864,466	Sandwiched structure for production of heat and hydrogen gas
3,864,465	Process for producing hydrogen from water

Obwohl ich bemüht war ALLE einschlägigen US Patente herauszufinden, bin ich mir sicher, daß diese doch sehr umfangreiche Sammlung nicht vollständig ist. Für die Nennung interessanter einschlägiger Patente bin ich nach wie vor dankbar. E-Mail: Alfred@klaar.at

3. Mikrowellen; Knallgas; Wasserstofferzeugung

US Patent #:

6,592,723	Process for efficient microwave hydrogen production
4,435,374	Method of producing carbon monoxide and hydrogen by gasification of solid carbonaceous material involving microwave irradiation

4. Neodymium Magnettechnologien ca. 2.100 Seiten Infos

die sowohl zum Einsatz im Elektrolyseuren oder Magnetmotoren eine Bedeutung haben

US Patent #:

6771923	Magnetic core for use in a development system
6765319	Plastic molded magnet for a rotor
6378743	Method, system and apparatus employing permanent magnets having reach-out magnetic fields for electromagnetically transferring, braking, and metering molten metals feeding into metal casting machines
6732890	Methods employing permanent magnets having reach-out magnetic fields for electromagnetically pumping, braking, and metering molten metals feeding into metal casting machines
6639144	Electromagnetic interference reduction system
6633100	Permanent magnet motor and rotor thereof
6603233	Electrical generator
6596096	Permanent magnet for electromagnetic device and method of making
6527822	Secret Info has told me, this patent is useful connected with oxyhydrogen.
6441523	Very high permanent magnet type electric rotating machine system
6319335	Secret Info has told me, this patent is useful connected with oxyhydrogen.
6296720	Secret Info has told me, this patent is useful connected with oxyhydrogen.
6283767	Grounding terminal
6262507	Permanent magnet motor and rotor thereof
6126588	Flexible magnetic pad
6046523	Computer controlled electric motor and method therefor
6015272	Magnetically suspended miniature fluid pump and method of designing the same
5942053	Composition for permanent magnet
5936320	Engine-driven permanent magnetic type welding generator
5918636	Fuel economiser
5907205	Constant reluctance rotating magnetic field devices with laminationless stator
5796190	Engine-driven permanent magnetic type welding generator
5748760	Dual coil drive with multipurpose housing
5586823	Magnetic stirring system
5580400	Magnetically anisotropic permanent magnet
5562782	Method for producing magnetically anisotropic permanent magnet
5548657	Compound loudspeaker drive unit
5499013	Pulse power generator
5356489	Process for the preparation of permanent magnets based on neodymium-iron-boron
5334265	Magnetic metal
5305411	Dielectric optical fiber cables which are magnetically locatable
5305410	Dielectric optical fiber cables which are magnetically locatable
5282904	Permanent magnet having improved corrosion resistance and method for producing the same
5179872	Magneto rotor
5174362	High-energy product rare earth-iron magnet alloys
5172751	High energy product rare earth-iron magnet alloys
5162064	Permanent magnet having improved corrosion resistance and method for producing

	the same
5118416	Permanent magnetic power cell circuit for treating fluids to control iron pipes
5114502	Magnetic materials and process for producing the same
5082745	Rare earth based permanent magnet having corrosion-resistant surface film and method for the preparation thereof
5055146	Permanent magnet alloy
5021698	Axial field electrical generator
5010911	Electromagnetic valve operator
4990876	Magnetic brush, inner core therefor, and method for making such core
4973415	Rapidly quenched ribbon magnet and plastic magnet containing powders of the rapidly quenched ribbon magnet
4926896	Sensitive electrical to mechanical transducer
4917778	Process for the corrosion protection of neodymium-iron-boron group sintered magnets
4902360	Permanent magnet alloy for elevated temperature applications
4900374	Demagnetization of iron-neodymium-boron type permanent magnets without loss of coercivity
4837109	Method of producing neodymium-iron-boron permanent magnet
4814053	Sputtering target and method of preparing same
4789521	Permanent magnet alloy
4777397	Permanent magnet generator apparatus including a consequent pole rotor
4737992	Compact electroacoustical transducer with spider covering rear basket opening
4721538	Permanent magnet alloy
4710239	Hot pressed permanent magnet having high and low coercivity regions
4322257	Permanent-magnet alloy
4192696	Permanent-magnet alloy
4131495	Permanent-magnet alloy
4034133	Magnetic recording medium with lubricant

5. Ionen Antriebe weitere ca. 9.800 Seiten Infos

US Patent #:

3943706	Ignition system for rocket engine combustion chambers operated by non-hypergolic propellant components
3946554	Variable pitch turbofan engine and a method for operating same
3946555	Process for simulating turbojet engine plumes
3952998	Device for installing rocket engines
3956666	Electron-bombardment ion sources
3956885	Electro thermal reactor
3964255	Method of inflating an automobile passenger restraint bag
3969646	Electron-bombardment ion source including segmented anode of electrically conductive, magnetic material
3974648	Variable geometry ramjet engine
3983695	Ion beam thruster shield
3987621	Method for reducing jet exhaust takeoff noise from a turbofan engine
3988888	Secret info has told me, this patent could be useful for new energy application.
3999379	Reduction of depressurization thrust termination jolt
3999380	Subliming solids gas generator with chemical reaction augmentation

4007586	Spin nozzle and thrust augment or mechanism
4007587	Apparatus for and method of suppressing infrared radiation emitted from gas turbine engine
4007597	Power plant and system for accelerating a cross compound turbine in such plant, especially one having an HTGR steam supply
4011719	Anode for ion thruster
4014168	Electrical technique
4022018	Mounting system for a thrust generating engine
4028066	Low viscosity-high flash point ramjet and turbojet fuels
4028579	High current density ion source
4030289	Thrust augmentation technique and apparatus
403430	Secret info has told me, this patent could be useful for new energy application.
4036012	Laser powered rocket engine using a gas dynamic window
4038817	Fuel jettison system
4043121	Two-spool variable cycle engine
4050242	Multiple bypass-duct turbofan with annular flow plug nozzle and method of operating same
4055946	Twin-spool gas turbine power plant with means to spill compressor interstage airflow
4062185	Method and apparatus for windmill starts in gas turbine engines
4068469	Variable thrust nozzle for quiet turbofan engine and method of operating same
4069661	Variable mixer propulsion cycle
4069664	Monopropellant thruster
4070827	Method and apparatus for limiting ingestion of debris into the inlet of a gas turbine engine
4085583	Method for selectively switching motive fluid supply to an aft turbine of a multicycle engine
4086286	Isomerization of tetrahydropolycyclopentadienes to a missile fuel additive
4095420	Augmentor outer segment lockout and fan up match
4099931	High density liquid ramjet fuel
4104875	Ion prime mover
4109460	Liquid fuel rocket engine having adjustable nozzle throat section
4114369	Cook-off coating
4115999	Use of high energy propellant in gas generators
4123196	Supersonic compressor with off-design performance improvement
4124976	Method for reducing the critical injection parameter in a solid fuel ramjet
4128995	Method and apparatus for stabilizing an augmenter system
4128996	Chlorite containing pyrotechnic composition and method of inflating an inflatable automobile safety restraint
4132067	Acoustic propulsion system
4133173	Ducted rockets
4137708	Jet propulsion
4137709	Turbo machinery and method of operation
4142365	Hybrid mixer for a high bypass ratio gas turbofan engine
4152891	Pyrotechnic composition and method of inflating an inflatable automobile safety restraint
4157648	Composition and method for inflation of passive restraint systems

4159625 Control for gas turbine engine
4169351 Electro thermal thruster
4170109 Thrust augmentor having swirled flows for combustion stabilization
4170110 Combustion process
4177217 Continuous process for conversion of dimethyldicyclopentadiene
to endo-dimethyldicyclopentadiene, a missile fuel
4183210 Gas turbine engine power plants
4185457 Turbofan-ramjet engine
4191888 Self-shielding small hole accel grid
4208355 Dimerization of norbornadiene to Binor-S with a homogeneous catalyst
4209703 Source for plasma of large transverse section and
constituting an ion accelerator
4211072 Device for the thermal decomposition of liquid fuels
4214438 Pyrotechnic composition and method of inflating an inflatable device
4222800 Isomerization of endo-endo hexacyclic olefinic dimer of norbornadiene
4223530 Liquid fuel rocket engine having a propellant component pump turbine with a secondary thrust discharge and to a method of operating a liquid fuel rocket engine
4225735 Isomerization of the hydrogenated norbornadiene endo-endo hexacyclic dimer
4225736 Codimer of norbornadiene and cyclohexadiene
4229612 Decolorization of norbornadiene dimers
4232515 Supersonic cruise airplane and engine
4238643 Steam powered plane or vehicle
4245469 Heat exchanger and method of making
4246751 Thrust engine and propellant exhaust arrangement therefore
4257224 Method and apparatus for controlling the mixing of two fluids
4270014 Production of high energy fuel
4277939 Ion beam profile control apparatus and method
4278823 Hydrogenolysis of 2,5-norbornadiene saturated endo-endo hexacyclic dimer
4285917 Method for removal of hydrogen sulfide from sour gas streams
4287715 Supersonic jet engine and method of operating the same
4288982 Low thrust monopropellant engine
4292802 Method and apparatus for increasing compressor inlet pressure
4294068 Supersonic jet engine and method of operating the same
4297152 Energetic monopropellant
4305247 Electro thermally augmented hydrazine thruster
4306412 Jet engine and method of operating the same
4309359 Energy process in methanol synthesis
4314445 Turbine engine thrust booster
4322946 Thermal thruster with super heater
4324096 Hydrazine thruster
4328667 Field-emission ion source and ion thruster apparatus comprising such sources
4332631 Castable silicone based magnesium fueled propellant
4335465 Method of producing an accelerating electrons and ions under
application of voltage and arrangements connected therewith
4354348 Solar space vehicle
4355194 Method for preparing high density liquid hydrocarbon fuels
4357795 Multi-burn solid fuel restart able rocket and method of use

4359190 Exact involute ply patterns
4369940 Air breathing propulsion system for supersonic vehicles
4381642 Ramjet engine
4392895 Ramjet fuel
4394528 High energy fuel compositions
4397147 Power circuit utilizing self excited Hall effects switch means
4403755 Method and apparatus for use in harnessing solar energy
to provide initial acceleration and propulsion of devices
4407119 Gas generator method for producing cool effluent gases
with reduced hydrogen cyanide content
4414807 Method and apparatus for controlling a gas turbine engine
4420931 Method of generating combustion gases utilizing
polynorborene-based combustible compositions
4421806 Low density resin systems for improved filament-wound
composites useful as rocket motor cases
4426038 Non-radiating extendible cloth exit cone for rocket nozzles
4426843 CO.sub.2 Coupling materials
4435958 Turbine bypass turbofan with mid-turbine reingestion and method of operating
the same
4446695 Aircraft propulsion assembly
4448019 Turbine bypass turbojet with mid-turbine reingestion
and method of operating the same
4450361 Coupling of MHD generator to gas turbine
4452039 Expendable infrared source and method therefore
4461144 Electro thermal gas thrust units
4462207 Thrust spoiler for aero engines
4466242 Ring-cusp ion thruster with shell anode
4467600 System for controlling the thrust nozzle adjustment of dual cycle gas turbine jet
propulsion engines
4470258 Thruster for space vehicles
4474001 Cooling system for the electrical generator of a turbofan gas turbine engine
4487016 Modulated clearance control for an axial flow rotary machine
4489550 System for controlling the thrust nozzle adjustment of
dual cycle gas turbine jet propulsion engines
4490972 Hydrazine thruster
4493184 Pressurized nacelle compartment for active clearance
controlled gas turbine engines
4504532 Phenolic blast tube insulators for rocket motors
4505105 No-back gas generator and method
4509333 Brayton engine burner
4510377 Small cartridge heater
4516050 Ion chamber for electron-bombardment ion sources
4523429 Cold start surge current limiting system for a hydrazine
thruster augmentation heater
4527388 Jet propulsion apparatus and methods
4527389 Highly soluble, non-hazardous hydroxylammonium salt
solutions for use in hybrid rocket motors

4528978 Solar rocket absorber
4541238 Process for the control of the mixture ratio of fuel and oxidizer for a liquid fuel motor by measuring flows, and control systems for carrying out this process
4548033 Spacecraft optimized arc rocket
4569198 Secret info has told me, this patent could be useful for new energy applivation.
4577461 Spacecraft optimized arc rocket
4581889 Gas turbine engine control
4585191 Propulsion apparatus and method using boil-off gas from a cryogenic liquid
4589253 Pre-regenerated staged-combustion rocket engine
4602480 Threaded polar openings for composite pressure vessels
4608821 Heat exchanger for electro thermal devices
4630437 Optical control method for solid fuel rocket burn rate
4644169 Laser energy transducer
4656828 Augmentation heater temperature control system
4658578 Igniting rocket propellants under vacuum conditions
4663932 Dipolar force field propulsion system
4689950 Hot gas flow generator with no moving parts
4700262 Continuous electrostatic conveyor for small particles
4704732 Method of suspending a platform for communications and observation kept at high altitude by atmospheric molecular momentum transfer
4707979 Method for storing and re-radiating energy to provide propulsion forces on devices
4707980 Power production process that reduces acid rain
4720971 Method for distributing augmentor fuel
4722183 Method for controlling the utilization of fluid bipropellant in a spacecraft rocket engine
4730449 Radiation transfer thrusters for low thrust applications
4733530 Emission current control system for multiple hollow cathode devices
4735045 Limited discharge bidirectional thruster and method of operation
4754601 Self-refueling space propulsion system and operating method
475958 Secret info has told me, this patent could be useful for new energy application.
4760694 Bi-level thruster
4760695 Acoustic oscillatory pressure control for ramjet
4765134 Acoustic oscillatory pressure control for solid propellant rocket
4766724 Arcjet power supply and start circuit
4766725 Method of suppressing formation of contrails and solution therefore
4771212 High voltage gas isolator
4781018 Solar thermal propulsion unit
4787201 Method and apparatus for controlling multiple engine aircraft
4787579 Gas thruster
4796534 Spinning ramjet vehicle with a non-spinning combustor
4800716 Efficiency arcjet thruster with controlled arc startup and steady state attachment
4805399 Secret info has told me, this patent could be useful for new energy application.
4805400 Non-erosive arcjet starting control system and method
4811556 Multiple-propellant air vehicle and propulsion system
4813229 Method for controlling augmentor liner coolant flow pressure in a mixed flow, variable cycle gas

4815279 Hybrid plume plasma rocket
4819431 Method of and system for controlling a fluidic valve
4821508 Pulsed electro thermal thruster
4821509 Pulsed electro thermal thruster
4825644 Ventilation system for a nacelle
4825646 Spacecraft with modulated thrust electrostatic ion thruster and associated method
4825647 Performance improvements in thruster assembly
4831818 Dual-fuel, dual-mode rocket engine
4835959 Multiple-propellant air vehicle and propulsion system
4838021 Electrostatic ion thruster with improved thrust modulation
4841723 Multiple-propellant air vehicle and propulsion system
4843814 Assembly for producing a propulsive force
4850188 Ionized gas energy cell
4862032 End-Hall ion source
4866929 Secret info has told me, this patent could be useful for new energy applivation.
4873467 Ion source with particular grid assembly
4882465 Arcjet thruster with improved arc attachment for enhancement of efficiency
4891600 Dipole accelerating means and method
4893470 Method of hybrid plume plasma propulsion
4893471 Inlet air demoisturizing system for a cryogenic engine and method for operation thereoff
4894511 Source of high flux energetic atoms
4903479 Radiation augmented energy storage system
4907407 Lifetime arcjet thruster
4920743 Crash bag propellant composition and method for generating nitrogen gas
4922711 Thrust reversing system for high bypass fan engines
4925909 Gas-generating agent for use in ducted rocket engine
4926632 Performance arcjet thruster
4936091 Two stage rocket combustor
4937456 Dielectric coated ion thruster
4959955 Method of operating gas turbine engine with fan damage
4961312 Method for controlling augmentor liner coolant flow pressure n a mixed flow, variable cycle gas turbine engine
4967637 Projectile accelerating device
4991393 Spacecraft guidance and control system
4995231 Performance arcjet thruster
5005355 Method of suppressing formation of contrails and solution therefore
5005361 Ion repulsion turbine
5012719 Method of and apparatus for generating hydrogen and projectile accelerating apparatus and method incorporating same
5014507 Direct drive gaseous hydrogen turbo actuator
5020411 Mobile assault logistic kinetmatic engagement device
5021270 Method for improving moisture barrier protection and electrostatic
discharge protection of a composite material cased rocket motor
502168 Secret info has told me, this patent could be useful for new energy applivation.
5027596 High performance propulsion thruster, especially for attitude and orbit control of

a space flight body
5038559 Method and apparatus for selectively varying an effective fluid flow area of a jet engine exhaust nozzle
5048285 Control system for gas turbine engines providing extended engine life
5052638 Electromagnetic ramjet
5058376 Turbofan synchrophaser
5058826 Scramjet engine having a low pressure combustion cycle
5063734 Method for providing real-time control of a gaseous propellant rocket propulsion system
5076051 Long life arcjet thruster having diffuse cathode arc attachment
5081831 Scramjet combustor
5085717 Autopyrolyzable composition for aerobic propulsion, the oxidizing agent of which is an explosive
5087215 Ocean-going vessel and method for increasing the speed
5090195 Propulsion motor using fine particulate material
5099644 Lean staged combustion assembly
5100625 Apparatus for testing candidate rocket nozzle materials
5103633 Scramjet combustor
5103634 Thrust reversing system and method
5103640 Air-fuel ratio feedback control system having a single air-fuel ratio
sensor downstream of a three-way catalyst converter
5109670 Scramjet combustor
5111656 Arcjet nozzle having improved electrical-to-thrust conversion
efficiency and high voltage operation
5117627 Method and device to protect a propulsive catalytic bed from degrading passed through by a fuel
5127222 Buffer region for the nacelle of a gas turbine engine
5131222 Thermally valved cooling system for exhaust nozzle systems
5133183 Secret info has told me, this patent could be useful for new energy applivation.
5138832 Solar thermal propulsion engine
5139587 Secret info has told me, this patent could be useful for new energy applivation.
5140809 Exhaust nozzle idle thrust spoiling method
5142861 Nonlinear electromagnetic propulsion system and method
5143566 Secret info has told me, this patent could be useful for new energy applivation.
5146742 Ion thruster for interplanetary space mission
5148672 Pulse thruster
5150571 Device for exposing or shutting off a turbo-engine on the intake air side of the engine
5152135 Reflector for efficient coupling of a laser beam to air or other fluids
5155992 Method and means for generating a force
5157916 Apparatus and method for suppressing sound in a gas turbine engine power plant
5167117 Method and apparatus for cooling an airplane engine
5170623 Secret info has told me, this patent could be useful for new energy applivation.
5175996 Apparatus for propellant flow control at low mass flow rates in zero G environment
5182905 Method for automatic bypass operation

5183222 Secret info has told me, this patent could be useful for new energy applivation.
5197279 Electromagnetic energy propulsion engine
5197280 Control system and method for controlling a gas turbine engine
5201800 Method for discharging combustion gases from an exhaust nozzle
5201886 Method of operating a pulse thruster
5207760 Multi-megawatt pulsed inductive thruster
5211006 Magneto hydrodynamic propulsion system
5211007 Method of pressure-ratio control of gas turbine engine
5214914 Translating cowl inlet with retractable propellant injection struts
5216878 Mixed exhaust flow supersonic jet engine and method
5220783 Foamed in place igniter and aft-end assembly for rocket motor comprising the same
5222359 Nozzle system and method for supersonic jet engine
5223651 Supersonic combustion engine and method of combustion initiation and distribution
5231824 Ion beam and ion jet stream motor
5231825 Method for compressor air extraction
5236152 Secret info has told me, this patent could be useful for new energy applivation.
5239820 Electric propulsion using C.sub.60 molecules
5249990 Method and apparatus for the propulsion of water vehicles
5255509 Particle bed reactor-powered turbine engine
5255513 Method of operating a scramjet including integrated inlet and combustor
5259187 Method of operating an aircraft bypass turbofan engine having variable fan outlet guide vanes
5259188 Method and system to increase stall margin
5267435 Thrust droop compensation method and system
5267436 Vectoring nozzle control of gas turbine engines
5267437 Dual mode rocket engine
5267584 Method of fluid flow control using a porous media
5269131 Segmented ion thruster
5269132 Method and apparatus for controlling infrared emissions
5269133 Heat exchanger for cooling a gas turbine
5269136 Sub-idle stability enhancement and rotating stall recovery
5282357 High-performance dual-mode integral propulsion system
5291734 Primary force ring for magnetohydrodynamic propulsion system
5300861 Method in a pulsed accelerator for accelerating a magnetized rotating plasma
5305598 Energy generated from volcanic ground states
5311735 Ramjet bypass duct and preburner configuration
5314311 Thrust generator
5317866 Free-flying tubular vehicle
5319926 Thruster for spacecraft
5320692 Solid fuel ramjet composition
5325661 Jet mixer noise suppressor using acoustic feedback
5329762 Method for assembling rocket propulsion motor
5333445 Secret info has told me, this patent could be useful for new energy applivation.
5339623 Singly fueled multiple thrusters simultaneously energized by a common power supply

5339624 Ramjet propellants
5341638 Low cost segmented structure for pressure vessels, rocket motors, piping
5341639 Fullerene rocket fuels
5349532 Spacecraft attitude control and momentum unloading using gimballed and throttled thrusters
5352139 Method and apparatus for the propulsion of water vehicles
5352861 Resonant high-voltage pulser for arcjet thruster ignition
5357747 Pulsed mode cathode
5357748 Compressor vane control for gas turbine engines
5359180 Power supply system for arcjet thrusters
5359258 Plasma accelerator with closed electron drift
5369953 Three-grid accelerator system for an ion propulsion engine
5379584 Synthesis of critical temperature of a turbine engine
5379585 Hydraulic control system for a jet engine nozzle
5380570 Thermoplastic para-polyphenylene sulfide, high temperature-resistant rocket motor cases
5392597 Jet mixer noise suppressor using acoustic feedback
5394689 Gas turbine engine control system having integral flight Mach number synthesis method
5402638 Spillage drag reducing flade engine
5404713 Spillage drag and infrared reducing flade engine
5406787 After-burning turbo-jet engine with a fixed geometry exhaust nozzle
5414238 Resonant power supply for an arcjet thruster
5417055 Valve for diverting fluid flows in turbo machines
5419116 Miniscale ballistic motor testing method for rocket propellants
5419286 System for lowering emissions of nitrogen oxides
5421153 Hydrodynamic propulsion device
5423179 Solid fuel ramjet engine for a spin-stabilized projectile
5425231 Gas fed pulsed electric thruster
5431010 High speed, amplitude variable thrust control method
5435127 Method and apparatus for boosting ram airflow to an ejection nozzle
5439191 Rail gun thruster
5442909 Control system for limiting the vector angle in an axisymmetric vectoring exhaust nozzle
5444973 Pressure-fed rocket booster system
5448883 Ion thruster with ion optics having carbon-carbon composite elements
5459996 Hybrid solar rocket utilizing thermal storage for propulsion and electrical power
5463866 Supersonic jet engine installation and method with sound suppressing nozzle
5464961 Arcjet anode
5473885 Pulse detonation engine
5475354 Plasma accelerator of short length with closed electron drift
5475722 Nuclear thermal rocket engine and nozzle therefore
5479358 Urban energy system for controlling an energy plant supplying energy to a community
5485721 Arcjet for a space flying body
5487267 Suppression of infrared radiation emissions from jet engines
5509266 Device for measuring variations in the thrust of a plasma acceleration with closed

electron drift
5513087 Arcjet startup using a shunt output high voltage pulse circuit
5517819 Engine full authority digital engine control automatic mach hold
5519991 Increased efficiency arcjet thruster
5520356 System for propelling and guiding a solid object with a beam of electromagnetic radiation
5533331 Safe propulsion system for missile divert thrusters and attitude control thrusters and method for use of same
5540046 Method and apparatus for pressure pulse arcjet starting
5542247 Apparatus powered using laser supplied energy
5546743 Electron propulsion unit
5548953 Carbon-carbon grid elements for ion thruster ion optics
5553449 Method of operating a gas turbine engine power plant for an aircraft
5560559 Actuation system with active compensation for transient loads
5566543 PVC-based gas gene rant for hybrid gas generators
5568723 Long life catalytic gas generator for space propulsion applications
5568724 Turbofan engine with means to smooth intake air
5579633 Annular pulse detonation apparatus and method
5579634 Use of controlled burn rate, reduced smoke, biplateau solid propellant formulations
5581155 Plasma accelerator with closed electron drift
5582001 Hybrid rocket combustion enhancement
5590520 Method of eliminating mach waves from supersonic jets
5592812 Metal complexes for use as gas generants
5605039 Parallel arcjet starter system
5622045 System for detecting and accommodating gas turbine engine fan damage
5636512 Nuclear rocket feed system incorporating an auxiliary power cycle
5636513 Two stage pressurization system for aerospace applications
5640843 Integrated arcjet having a heat exchanger and supersonic energy recovery chamber
5646476 Channel ion source
5660040 Scramjet fuel injection system having independent fuel supplies for supersonic and hypersonic operation
5664415 After-burning turbo-fan engine with a fixed geometry exhaust nozzle having a variable flow coefficient
5675966 Solid propellant dual pulse rocket motor loaded case and ignition system and method of manufacture
5685140 Method for distributing fuel within an augmentor
5685141 Lock for nozzle control in the event of hydraulic failure
5689950 Ion thruster with graphite accelerator grid
5689951 Method and apparatus for pressure pulse arcjet starting
5694766 Method and apparatus for controlling the throat area, expansion ratio and hrust vector angle of an aircraft turbine engine exhaust nozzle using regions of locally separated flow
5694773 Closed cycle gas turbine engine and mechanical system driven thereby
5699663 Method of preventing instabilities produced by combustion in a turbojet engine
5711695 Gas-propelled toy with exhaust nozzle for gas cartridge

5727368 Hybrid motor system with a consumable catalytic bed a composition of the catalytic bed and a method of using
5732547 Jet engine fan noise reduction system utilizing electro pneumatic transducers
5746050 Gaseous product delivery system
5747730 Pyrotechnic method of generating a particulate-free, non-toxic odorless and colorless gas
5755091 Regenerative piston engine for combustion of liquid monopropellant
5761899 Secret info has told me, this patent could be useful for new energy applivation.
5765360 Process for cooling engine walls and wall structure for carrying out the process
5765361 Hybrid-LO2-LH2 low cost launch vehicle
5768885 Regenerative piston liquid propellant rocket motor
5775094 Apparatus and method for controlling thruster valve
5775095 Method of noise suppression for a turbine engine
5775096 Process for operating a reaction-type missile propulsion system and missile propulsion system
5778658 Recoup turbojet engine
5784877 Rocket-ramjet engine casing port closure
5794432 Variable pressure and variable air flow turbofan engines
5806301 Secret info has told me, this patent could be useful for new energy applivation.
5806302 Variable fan exhaust area nozzle for aircraft gas turbine engine with thrust reverser
5813217 Ion beam thrust method
5813218 Thrust reverser door lock vent and method
5819526 Low power arcjet propellant feed system
5845880 Hall effect plasma thruster
5873239 Nuclear rocket engine incorporating a heat exchange
5873240 Pulsed detonation rocket engine
5875627 Fluid propulsion system for accelerating and directionally controlling a fluid
5892329 Plasma accelerator with closed electron drift and conductive inserts
5901551 Converging constrictor for an electrothermal arcjet thruster
5909001 Method of generating a high pressure gas pulse using fuel and oxidizer that are relatively inert at ambient conditions
5924277 Ion thruster with long-lifetime ion-optics system
5924278 Pulsed plasma thruster having an electrically insulating nozzle and utilizing propellant bars

5925322 Fuel cell or a partial oxidation reactor or a heat engine and an oxygen-enriching device and method therefor
5934068 Method and apparatus for pressure pulse arcjet starting
5938975 Method and apparatus for total energy fuel conversion systems
5945781 Ion source with closed electron drift
5947421 Electrostatic propulsion systems and methods
5956938 Microwave electro-thermal thruster and fuel therefor
5961074 Method and apparatus for pressurized feeding of liquid propellants to a rocket engine
5974782 Method for enabling operation of an aircraft turbo-engine with rotor unbalance
5987880 Supersonic engine, multi-port thrust reversing system

5992825 Portable expansion device
6000215 Method of operating a gas turbine engine
6000223 Secret info has told me, this patent could be useful for new energy applivation.
6003300 Technique for high mixing rate, low loss supersonic combustion with solid hydrogen and liquid helium fuel
6003301 Exhaust nozzle for multi-tube detonative engines
6012281 Noise suppressing fluid mixing system for a turbine engine
6029438 Drive circuit for electric propulsion thruster
6031334 Method and apparatus for selectively distributing power in a thruster system
6064156 Process for ignition of gaseous electrical discharge between electrodes of a hollow cathode assembly
6065284 Refractory heat transfer module
6073437 Stable-combustion oxidizer for hybrid rockets
6075321 Hall field plasma accelerator with an inner and outer anode
6101808 Cryogenic solid hybrid rocket engine and method of propelling a rocket
6109021 Vectoring nozzle calibration
6112512 Method and apparatus of pulsed injection for improved nozzle flow control
6112513 Method and apparatus of asymmetric injection at the subsonic portion of a nozzle flow
6121569 Plasma jet source using an inertial electrostatic confinement discharge plasma
6131385 Integrated pulsed propulsion system for microsatellite
6135393 Spacecraft attitude and velocity control thruster system
6145298 Atmospheric fueled ion engine
6145299 Rocket engine
6148605 Method and device for reversing the thrust of very high bypass ratio turbojet engines
6150764 Tandem hall field plasma accelerator
6153976 Pulsed plasma thruster with electric switch enabling use of a solid electrically conductive propellant
6158209 Device for concentrating ion beams for hydromagnetic propulsion means and hydromagnetic propulsion means equipped with same
6173565 Three axis pulsed plasma thruster with angled cathode and anode strip lines
6182441 Drive circuit for electric propulsion thruster
6193194 Magnetic propulsion system and operating method
6195980 Electrostatic propulsion engine with neutralizing ion source
6195981 Vectoring nozzle control system
6195982 Apparatus and method of active flutter control
6202404 Method and apparatus for reducing the temperature of air entering a compressor of a turbojet engine by variably injecting fluid into the incoming air
6205378 Adaptive mass expulsion attitude control system
6205769 Compact coupling for microwave-electro-thermal thruster
6205770 Rocket engine
6208080 Magnetic flux shaping in ion accelerators with closed electron drift
6209821 Secret info has told me, this patent could be useful for new energy applivation.
6212876 Simplified high-efficiency propulsion system
6213431 Asonic aerospike engine
6215124 Multistage ion accelerators with closed electron drift

6216445 Micro pulsed plasma thruster and method of operating same
6220016 Rocket engine cooling system
6233919 Force driven hot gas proportional thruster valve
6246162 Ion optics
6250070 Ion thruster with ion-extraction grids having compound contour shapes
6250071 Housing for a disk propulsion system and a method of using the same
6250072 Multi-ignition controllable solid-propellant gas generator
6263665 Microthruster for heating a propellant, driving the vapors produced to a discharge section
6269629 Micro-pulsed plasma thruster having coaxial cable segment propellant modules
6279314 Closed electron drift plasma thruster with a steerable thrust vector
6281622 Closed electron drift plasma thruster adapted to high thermal loads
6286304 Noble gas storage and delivery system for ion propulsion
6290185 Solar thermal rocket
6290505 Ballistic performance simulator
6293090 More efficient RF plasma electric thruster
6295804 Pulsed thruster system
6295805 Exhaust induced ejector nozzle system and method
6300720 Plasma gun and methods for the use thereof
6301876 Noble gas storage and flow control system for ion propulsion
6308514 Rocket engine nozzle
6308898 Apparatus and methods for active flow control of a nozzle exhaust plume
6311476 Integral propulsion and power radiant cavity receiver
6318069 Ion thruster having grids made of oriented pyrolytic graphite
6334301 Assembly of etched sheets forming a fluidic module
6334302 Variable specific impulse magnetoplasma rocket engine
6336318 Ion thruster having a hollow cathode assembly with an encapsulated heater, and its fabrication
6338242 Vented MK 66 rocket motor tube with a thermoplastic warhead adapter
6343464 Solar thermal rocket
6343465 Aircraft fuel tank explosion reduction safety method
6349538 Annular liquid fueled pulse detonation engine
6350394 Method and apparatus for total energy fuel conversion systems
6351939 Swirling, impinging sheet injector
6352455 Marine propulsion device
6353790 Gas turbine aeroengine control system
6354074 Hybrid injection thrust vector control
6354075 Vented rocket motor spacer
6367243 Atomic-based combined cycle propulsion system and method
6378290 High-frequency ion source
6385963 Optical system for generating endothermic fuel for use in a propulsion producing engine
6397580 High performance rocket engine having a stepped expansion combustion chamber and method of making the same
6408614 High-power pressure wave source
6412274 Solar thermal rocket
6412275 Solid propellant gas generator impulse management scheme for high mass flow

turn-down ratio
6415596 Method for increasing the specific impulse in a liquid-propellant rocket engine and rocket powder unit for realising the same
6419538 Marine propulsion system and method using an in-situ generated water plasma
6421998 Thruster device responsive to solar radiation
6432178 Apparatus to separate gas from a liquid flow
6438940 Methods and apparatus for providing uniform ignition in an augmenter
6449941 Hall effect electric propulsion system
6457306 Electrical drive system for rocket engine propellant pumps
6478250 Propulsive torque motor
6487490 Speed modification system for gas turbine engine to allow trimming of excess
6487844 Aerospike augmentation of microthruster impulse
6492784 Propulsion device and method employing electric fields for producing thrust
6499286 Method for the operation of a supersonic jet-engine combined power unit
6499287 Integrated tankage for propulsion vehicles and the like
6507142 Plume shield for ion accelerators
6516604 Micro-colloid thruster system
6519928 Process for the production of a transverse thrust in a flying object
6523338 Plasma accelerator arrangement
6526744 System and method for controlling the stowage of jet engine thrust reversers
6530212 Laser plasma thruster
6530213 Method and apparatus for ignition detection
6532728 Reducing skin friction drag
6532729 Shelf truncated chevron exhaust nozzle for reduction of exhaust noise and infrared (IR) signature
6532730 Slip joint duct system for a rocket fuel duct
6539703 Spacecraft component with microthruster actuation and operation thereof
6541916 Method for providing discharge power to electric propulsion thrusters
6550235 Combined cycle pulse detonation turbine engine operating method
6564541 Method for controlling the deployment of jet engine thrust reversers
6566420 EPDM rocket motor insulation
6574951 Solar thermal rocket
6581369 Heat recovery in test cells for gas turbine engines
6584761 MAPP gas fuel for flight vehicles having pulse detonation engines and method of use
6584762 Gas turbine engine fuel control method
6593525 Direct burial outdoor membrane pressurization system
6594984 Combined thrust and power generator for a satellite
6598385 Two stage gas pilot valve controlling gas flow to a reaction jet nozzle
6606851 Transpiration cooling of rocket engines
6609363 Iodine electric propulsion thrusters
6612105 Uniform gas distribution in ion accelerators with closed electron drift
6612106 Segmented mixing device having chevrons for exhaust noise reduction in jet engines
6619028 Electric thruster made with surface treatments for improved thermal management
6620519 System and method for inhibiting corrosion of metal containers and components

6622472 Apparatus and method for thrust vector control
6640535 Linear gridless ion thruster
6644014 Electric thruster and thrust augmenter
6644015 Turbojet with precompressor injected oxidizer
6644016 Process and device for collecting air, and engine associated therewith
6655124 External system and method for rocket exhaust plume signature tailoring
6658839 Secret info has told me, this patent could be useful for new energy applivation.
6662548 Jet blade ejector nozzle
6662549 Propulsion system
6662550 Method and apparatus for improving the efficiency of pulsed detonation engines
6666016 Mixing enhancement using axial flow
6668541 Method and apparatus for spraying fuel within a gas turbine engine
6679048 Apparatus and method for controlling primary fluid flow using secondary fluid flow injection
6679049 Hybrid rocket motor having a precombustion chamber
6681558 Method of increasing engine temperature limit margins
6681559 Thrust reverser position determination system and method
6684622 Rocket exhaust plume signature tailoring
6691505 Fiber-reinforced rocket motor insulation
6698184 Thrust chamber assembly
6701705 Gas-walled rocket nozzle
6705075 Digital solid rocket motor and gas generator
6718752 Deployable segmented exhaust nozzle for a jet engine
6735935 Pulsed hall thruster system
6742324 Methods and apparatus for supporting variable bypass valve systems
6742325 Method of generating thrust and electrical power from an optical solar image
6745466 Method of making a thruster device for solar radiation
6751943 Method of magnetohydrodynamic flow control for pulse detonation engines
6769241 Description of methods to increase propellant throughput in a micro pulsed plasma thruster
6769242 Rocket engine
6774532 Self-powered microthermionic converter
6779335 Burning nitrous oxide and a fuel
6782693 Case burning rocket with drive system for combustion chamber and nozzle
6786035 Ion thruster grid clear
6786036 Bimodal fan, heat exchanger and bypass air supercharging for piston or rotary driven turbine
6786037 Segmented mixing device having chevrons for exhaust noise reduction in jet engines
6787586 EPDM rocket motor insulation
6807804 Hybrid rocket motor having a precombustion chamber
6820410 Bifurcated turbofan nozzle
6826901 Secret info has told me, this patent could be useful for new energy applivation.
6832471 Expander cycle rocket engine with staged combustion and heat exchange
6834492 Air breathing electrically powered hall effect thruster
6834493 System for reducing pump cavitation
6845607 Variable area plug nozzle

6853930 System for aiding the preparation of operation and maintenance plans for a power generation installation
6854260 Jet nozzle mixer
6857261 Multi-mode pulsed detonation propulsion system
6876714 Device for heating gas from a thin layer of nuclear fuel, and space engine incorporating such device
6877309 Nuclear-fueled power generating system
6883302 Methods and apparatus for generating gas turbine engine thrust with a pulse detonation thrust augmenter
6886327 NiAl-based approach for rocket combustion chambers
6892525 Micropump-based microthruster
6901740 Engine with a central spike for a space launcher
6910327 Apparatus and methods for varying inlet lip geometry of a jet engine inlet

Auflistung einschlägiger Deutsche Patente

7.0.2.1. Ballin Alexander; Patent DE 103 55 158 A1;

Kurzbeschreibung:
Die Erfindung betrifft ein Verfahren zum Gewinnen elektrischer Energie und/oder mechanischer Antriebsenergie aus elektrolytisch dissoziiertem Wasser. Hierbei wird in einer nach dem Prinzip eines Hochfrequenz – Resonanz – Elektrolyse - Verfahrens arbeitenden elektrisch betriebenen Dissoziationseinheit aus einer im wesentlichen kontinuierlich zugeführten Wassermenge ein Knallgemisch aus Wasserstoff und Sauerstoff erzeugt. Die chemische Energie des Knallgemischs wird in elektrische Energie und/oder mechanische Antriebsenergie umgesetzt. Ein Teil der erzeugten elektrischen Energie wird der Dissoziationseinheit zugeführt. Eine Vorrichtung zum Erzeugen von mechanischer Antriebsenergie und/oder elektrischer Energie enthält mindestens einen Wassertank eine mit dem Wassertank verbundene Hochfrequenz-Resonanz-Elektrolyseeinheit, eine mit der Hochfrequenz-Resonanz-Elektrolyseeinheit verbundene Brennstoffzellen-Einrichtung und/oder einen mit der Hochfrequenz-Resonanz-Elektrolyseeinheit verbundenen Knallgas-Verbrennungsmotor:

7.0.2.2. Hartkorn Karl-Heinz, Patent Nr. :2416993;

Wasserelektrolyse mit Gleichstrom und überlagertem pulsierenden Wechselfeld.

(51) Int. Cl. 2: C 25 B 1-04

⑲ **BUNDESREPUBLIK DEUTSCHLAND**

DEUTSCHES PATENTAMT

DT 24 16 993 A1

⑪ Offenlegungsschrift 24 16 993

㉑ Aktenzeichen: P 24 16 993.5
㉒ Anmeldetag: 8. 4. 74
㊸ Offenlegungstag: 9. 10. 75

㉚ Unionspriorität:
㉜ ㉝ ㉛ —

---

(54) Bezeichnung: Verfahren zur Erzeugung von Wasserstoff und Sauerstoff unter Verwendung elektrischer Energie

(71) Anmelder: Hartkorn, Karl Heinz, 6085 Neuheim

(72) Erfinder: gleich Anmelder

DT 24 16 993 A1

PATENT - ANMELDUNG

des Ober-Ing. Karl Heinz HARTKORN, 6o85 Nauheim,
Heinrich-Zille-Strasse 37 (Deutschland)

betreffend " Verfahren zur Erzeugung von Wasserstoff und Sauerstoff unter Verwendung elektrischer Energie "

Die Prioritäten der Anmeldung in

wird beansprucht.

Überreicht an der Einlaufstelle
des Patentamtes:

<u>Dieser Anmeldung liegen bei:</u>

A) 2 Beschreibungen
B) Patentansprüche 2-fach
C) 4 Hautpzeichnungen

509841/0530

Rüsselsheim, am 6. April 1974

Die Erfindung bezieht sich auf ein Verfahren zur Erzeugung von Wasserstoff und Sauerstoff, bei dem der Elektrolyt mittels Hindurchleiten elektrischen Stromes von über im Elektrolyt befindlichen Elektroden und von im darüberliegenden Gasraum angeordneten Elektroden gespalten wird.

Elektrochemische Gaserzeugeranlagen haben den Vorteil, dass sie unkompliziert und rasch wässrige Elektrolyte und die darin enthaltenen Wassermoleküle zu spalten und so in der Lage sind, reine Gase zu erzeugen.

So kann man bei einer Schwefelsäure-Elektrolyse mittels Hindurchleiten elektrischen Stromes, der gleichgerichtet ist, bekanntermassen nach den Faradayschen Gesetzen 1/3 Sauerstoff und 2/3 Wasserstoff mit einem Aufwand von ca. 4,5 - 5,1 kWh je Nm^3H_2 erzeugen.

Man kann auch durch Verlegen der Elektroden in den Gasraum bei entsprechendem Minderdruck an die Elektroden eine Hochspannungsquelle anschließen und mit dem sogenannten Glimmfleck, der Glimmlichtentladung, Wasserstoff und Sauerstoff abscheiden.

Die vorliegende Erfindung setzt sich nun zum Ziel, ein Verfahren eingangs erwähnter Art dahingehend so weiterzubilden, dass eine wesentlich wirtschaftlichere Erzeugung der Gase erzielt wird, wobei als Strom zur Versorgung der im Elektrolyten befindlichen Elektroden Gleichstrom mit einem überlagerten Wechselfeld verwendet wird, der in Abhängigkeit vom Elektrolyten in den Elektroden pulsierend wirkt und zusätzlich im darüberliegenden Gasraum Elektroden angeschlossen sind, die mit einer Hochspannungsquelle im Bereich von mehr als 3oo Volt und hoher Frequenzen verbunden sind, so dass bei Hindurchleiten des elektrischen Stromes sowohl durch den Elektrolyten als auch im Gasraum bei gleichen Energieaufwendungen Steigerungen der Gasmengen um das bis zu 1o-fache gegenüber der bislang wie bei der Normal-Elektrolyse bekannten Verfahren erreicht werden.

Das erfindungsgemäße Verfahren eingangs erwähnter Art ist dadurch gekennzeichnet, dass während der durch Hindurchleiten des Stromes erfolgenden Spaltung die im Elektrolyten befindlichen Elektroden mit wechselnden Frequenzen gefahren werden können und bei Entstehen von Polarisationseffekten die Stromrichtung durch Magnetschalteinrichtungen automatisch und so lange gewechselt werden, bis die Depolarisation erreicht ist.

Erfolgt Umpolung zur Depolarisation, dann wird kurz vor der automatischen Umschaltung der Gasraum mittels Vakuumpumpen entleert und danach der Gasraum auf den Gegengasbehälter umgeschaltet, so dass in die beiden Gasbehälter immer nur entweder O_2 oder H_2 gelangen kann.

Zur Unterstützung des Depolarisationseffektes kann sich im Flüssigkeitsraum ein elektrischer Widerstand zum Aufheizen des Elektrolyten befinden, damit durch thermische Einwirkung die Depolarisation beschleunigt wird.

Die erfindungsgemäße Ausführung der Stromerzeugermaschine ist so durchgeführt, dass die für die Elektroden im Gasraum erforderliche Hochspannung vor dem Eingangstransformator zur Gleichstromerzeugung abgenommen wird.

Die vorstehend beschriebene erfindungsgemäße Anordnung erlaubt es daher, mit einer Stromerzeugeranlage beide Stromarten zu erzeugen und zu betreiben.

Der weitere Vorteil der erfindungsgemäßen Anordnung des Systems besteht darin, dass die Hochspannungsversorgung der Elektroden im Gasraum durch Zwischenschaltung eines Hochfrequenz-Generators erfolgen kann und somit die Elektroden im Gasraum mit Hochspannung hoher Frequenzen versorgt werden, so dass die gleichen Leistungssteigerungen bei der Erzeugung von H_2 im Gasraum wie bei den Elektroden mit Frequenzüberlagerung im Elektrolytraum erzielt werden können.

- 4 -

Vorteilhaft lässt sich die neue Methode zur Erzeugung von H_2 und O_2 zur Bereitstellung speicherbarer Energie in Elektrizitätswerken verwenden, wenn diese während der Nachtstunden keine Stromabnahme oder eine reduzierte Stromabnahme haben.
Es besteht somit die Möglichkeit, mit fossilen oder gasförmigen Brennstoffen oder durch Wasserkraft betriebene Kraftwerke auch in der Nachtzeit mit 1oo % ihrer Kapazität arbeiten zu lassen und durch Umwandlung der Energie in Gas dieses zu speichern.
Der Vorteil ist dabei, dass derart in der Nacht erzeugte Brennstoffe während der Tagesstunden in den Kraftwerken zur Spitzenstromdeckung und zur Erhöhung des Wirkungsgrades, bzw. bei der Verfeuerung von fossilen Brennstoffen verwendet werden kann.

Nukleare Kraftwerke können statt in dichtbesiedelten Wohngebieten oder an Flüssen beispielsweise im Meer errichtet werden und dort nach Erzeugung der elektrischen Energie unter Verwendung von Meerwasser H_2 erzeugt werden, was den Transport der nuklear erzeugten Energie zum Festland über erprobte Gaspiplines gegenüber dem Verlegen von Stromkabeln mit all den dabei entstehenden Problemen erheblich vereinfachen wird.

Hinzu kommt, dass derart gewonnener Wasserstoff ohne weiteres in die in fast allen Industrieländern vorhandenen Gas-Verbundnetze eingespeist und auch beispielsweise mit Edelgas oder Methan vermischt werden kann.

Der sich daraus ergebende Vorteil lässt es zu, den Wasserstoff an den Verbraucherstellen entweder direkt zur Wärmeerzeugung, zur industriellen Nutzung oder zur Umwandlung in elektrische Energie einzusetzen.

Des weiteren lässt die erfindungsgemäße Ausführung der Gaserzeugung es zu, bei Verwendung des gewonnenen Wasserstoffes eine Erhöhung der Zündgeschwindigkeiten von schwerem Heizöl durch Zumischung von Wasserstoff zu erreichen, was eindeutig zu einer besseren Nutzung des schweren Heizöles und gleichzeitig zu einer erheblichen Verringerung der Abgasbelastung, bedingt durch die besseren Verbrennungsvorgänge, bewirkt.

Die erfindungsgemäße Anordnung des Verfahrens führt auch zur Gewinnung beträchtlicher Mengen Sauerstoff.
Dieser kann sowohl zur Erhöhung der Brennerleistung von Kraftwerken anstelle oder zusammen mit der Beimengung von atmosphärischer Luft als auch zum Zwecke der Gasnachverbrennung in Kraftwerkskaminen zur Reduzierung von Emissions- und Immissionsvorgängen verwendet werden.

Die erfindungsgemäßs Anordnung des Verfahrens lässt sich vorteilhaft auch in elektrochemischen Abwasserreinigungsanlagen insoweit verwenden, als entweder in den Pausezeiten der elektrochemischen Anlagen die zur Abwasserreinigung vorhandenen Hochstrom-Maschinen auf reine O_2- und H_2-Erzeugeranlagen geschaltet werden und dabei Sauerstoff und Wasserstoff erzeugen.
In diesem Falle wird der Wasserstoff zur Verbrennung des bei der Abwasserreinigung anfallenden Schlammes oder dessen Trocknung oder zum Betrieb von fabrikeigenen Heizanlagen verwendet, der anfallende Sauerstoff kann sowohl zu den Abwasserreinigungs-Reaktoren zur Erhöhung der Oxidationswirkung zurückgeführt oder zur Sauerstoff-Bedarfsdeckung nachgeschalteter biochemischer Reinigungsstufen vorteilhaft eingesetzt werden.

Die erfindungsgemäße Anordnung des Verfahrens kann bei der Abwasserreinigung auch durch Verwendung von Wasserstoff als Reduktionsmittel nach der vorbeschriebenen Verfahrensweise dann verwendet werden, wenn es sich um Abwasser mit Schadstoffen handelt, die besser reduktiv als oxidativ zu behandeln sind.

Die vorliegende Erfindung vermeidet somit die Nachteile der Gewinnung von Wasserstoff auf der Basis der Normal-Elektrolyse durch eine erheblich gesteigerte Wirtschaftlichkeit und lässt es zu, die gewonnenen Gase volkswirtschaftlich sinnvoll in vielen Bereichen der Energieerzeugung auf unkomplizierte Art einzusetzen.

Nicht unerwähnt soll die Tatsache bleiben, dass Wasserstoff völlig rückstandslos verbrennt und somit absolut umweltfreundlich ist.

Der gleichzeitig gewonnene Sauerstoff weist die gleichen Vorzüge nicht nur in Heizanlagen, sondern beispielsweise auch bei seiner Verwendung bei der Gas- und Abwasserreinigung auf, da ihm die in atmosphärischer Luft enthaltenen Gase wie beispielsweise Stickstoff oder durch die Industrie und Kraftfahrzeuge in die Atmosphäre gelangenden Monoxide und Dioxide völlig fehlen.

Die Erfindung ist nachstehend anhand der Zeichnungen näher erläutert:

Fig. 1) zeigt ein Ausführungsbeispiel einer erfindungsgemäßen Stromerzeugermaschine (1) mit getrennt angeordneten Hochfrequenz-Generator in kapazitiver Dreipunkt-Schaltung mit parallel zugeführter Betriebsspannung (2),den Abgängen zum oberen Gasraum des Elektrolyseurs (3),den Gleichrichter-Unterbrechern zur Frequenzsteuerung (4),den Gleichrichtern (5),den Elektrolyseur mit den in dem Elektrolyten und im Gasraum angeordneten Elektroden (6),den Gasleitungen für O_2 und H_2 zu den Speichern (7) sowie die Umpoleinrichtung zum Wechseln der Stromrichtung bei eintretender Polarisation an den Elektroden (6),

Fig. 2) zeigt die Anordnung des Elektrolyseurs in Kolonnenschaltung (1), die Stromschienen zu dem einzelnen Elektroden im Gasraum (2), die Stromschienen zu den einzelnen Elektroden im Elektrolyten (3), die Sauerstoffleitung mit Gasbehälter (4) und die Wasserstoffleitung mit Gasbehälter (5)

Fig. 3) zeigt das Schema einer Kraftwerksanlage mit nachgeschaltetem Gaserzeuger nach dem erfindungsgemäßen Verfahren mit fossilen und flüssigen Brennstoffen (1), der Brennkammer mit Dampferzeuger (2), der Dampfturbine (3), dem mit dieser gekoppelten Stromerzeuger-Generator (4), der Hochspannungsleitung (5), dem erfindungsgemäßen Gaserzeuger (6), den Sauerstoff- und Wasserstoff-Speichern (7), der Sauerstoffleitung zur Rückführung in die Brennkammer (8) und der Wasserstoffleitung zur Rückführung in die Brennkammer (9),

Fig. 4) zeigt schematisch eine elektrochemische Abwasserreinigungsanlage nach dem HARTKORN-ELEKTRO-M-Verfahren R , bestehend aus 4 diskontinuierlich betriebenen Reaktoren, die von 2 Stromerzeugern mit Umschaltern mit Energie versorgt werden (1), die erfindungsgemäße Anordnung der Gaserzeugeranlage (2), den O_2- und H_2-Speichern (3), der H_2-Speiseleitung zur Brennkammer eines Kraftwerkes (4), der O_2-Speiseleitung zur Einleitung von reinem Sauerstoff (5) in die Abwasserzuführungsleitung (6) und der Abführungsleitung des gereinigten Abwassers in den Vorfluter (7).

1o. Verfahren nach den Ansprüchen 1, 2, 3, 4 und 5, dadurch gekennzeichnet, dass in elektrochemischen Wasserreinigungsanlagen zusätzlich eine Elektrolysezelle zur Gewinnung von Wasserstoff und Sauerstoff angeordnet ist und diese parallel geschaltet oder in den Stillstandszeiten der Stromerzeugermaschinen der Wasserreinigungsanlage Gase erzeugt.

11. Verfahren nach Anspruch 1o, dadurch gekennzeichnet, dass der dort oder in einer getrennten Gaserzeugeranlage gewonnene Sauerstoff zur Oxidation von Wasserinhaltsstoffen verwendet wird.

12. Verfahren nach Anspruch 1o, dadurch gekennzeichnet, dass der dort oder in einer getrennten Anlage erzeugte Wasserstoff zur Reduktion von Wasserinhaltsstoffen verwendet wird.

Karl Heinz Hartkorn
Ober-Ing.

6o85 Nauheim, Heinrich-Zille-Strasse 37,
den 6. April 1974

gez. Karl Heinz Hartkorn

FIG. 1

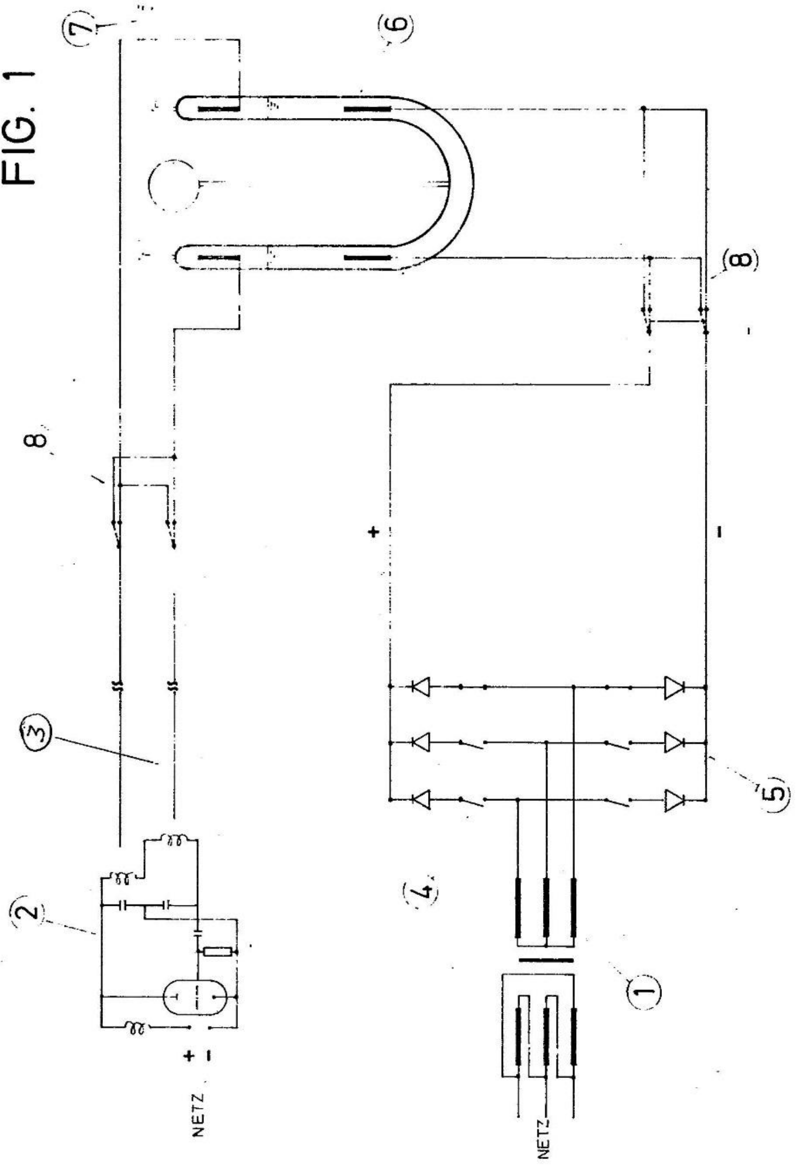

FIG. 2

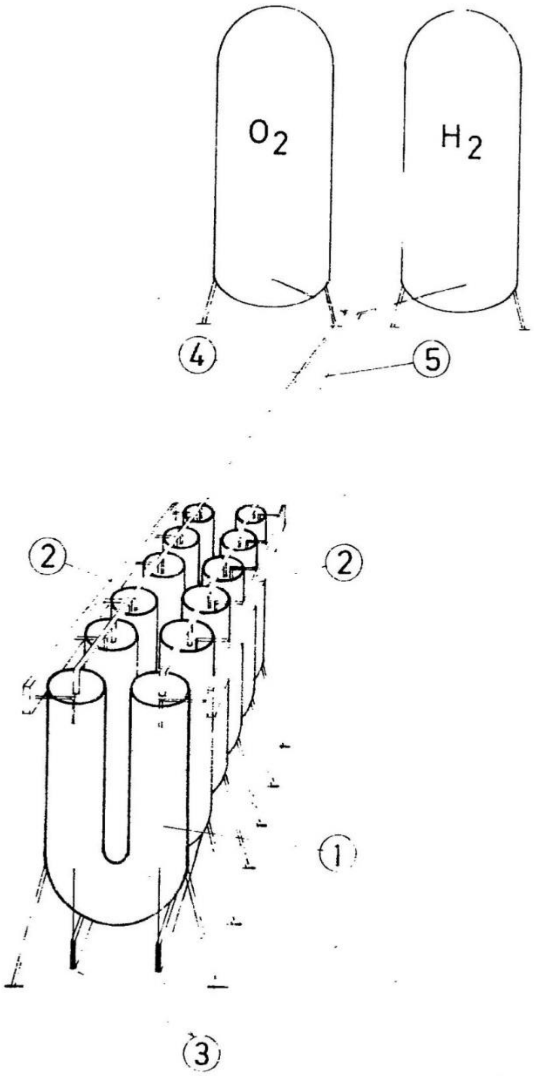

FIG. 3

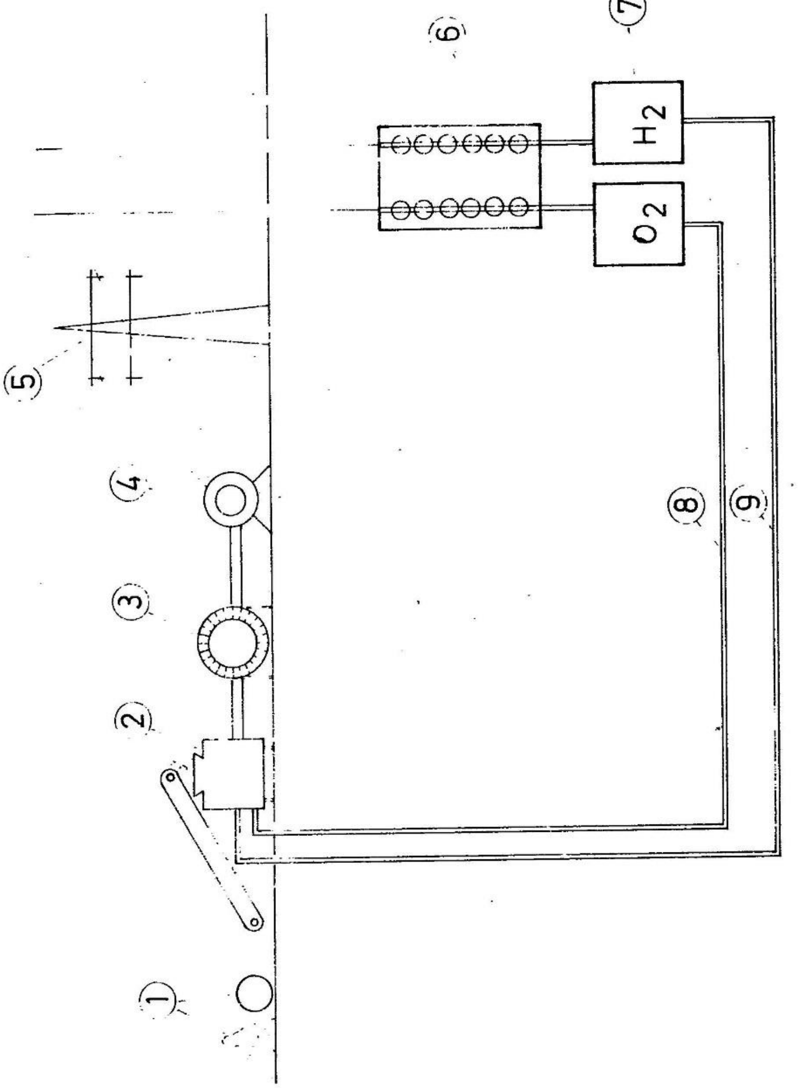

FIG. 4

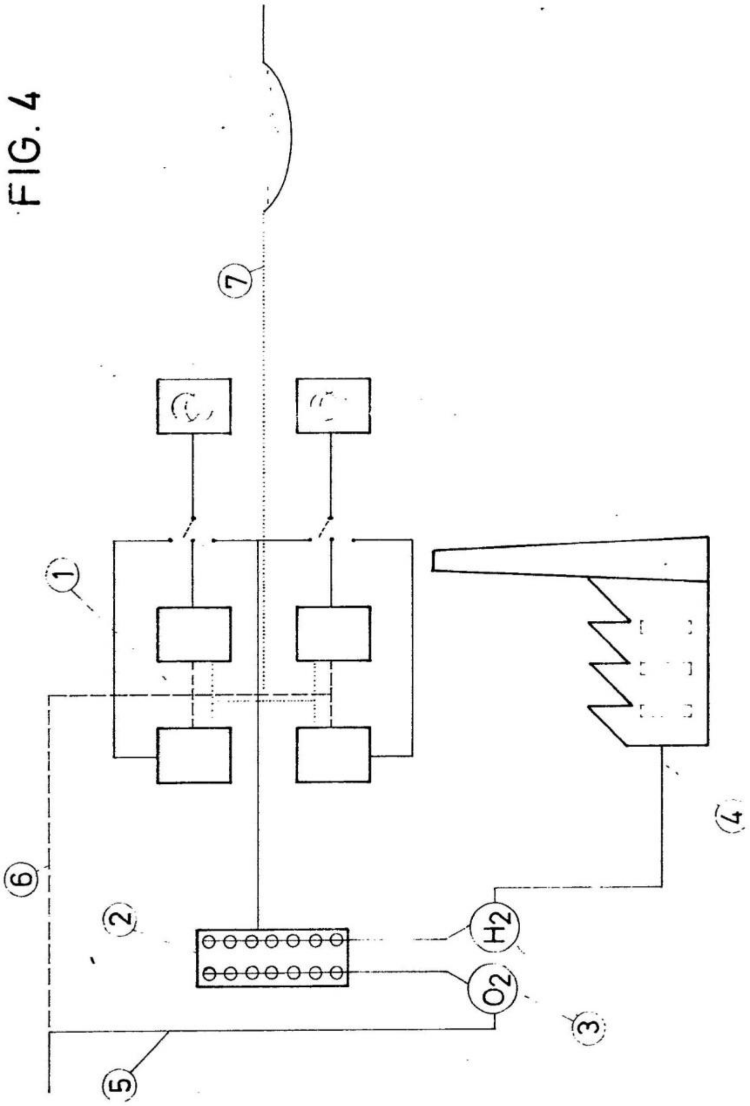

VIII.) Teil Kreativität

und wie man diese steigert!

Generell

Wer ein Problem lösen will hat oftmals eine Vielzahl von Lösungsmöglichkeiten. Die Erfahrung hat gezeigt Intuition ist eine tolle Sache, langfristig führt aber nur Strategie zum gewünschten Erfolg und „die Theorie zur Lösung erfinderischer Probleme“ des russischen Patentexperten Genrich Altschuller hat sich bestens bewährt zumal hier postuliert wird, daß sich die unterschiedlichsten Probleme bereits mit wenigen Grundregeln der Innovation, lösen lassen.

Siehe auch: http://de.wikipedia.org/wiki/Genrich_Saulowitsch_Altschuller

Kreativität ist ein Teil jeder Innovation und da immer wieder Menschen Probleme haben Ihre Kreativität entsprechend zu formulieren, zu gestalten, nachfolgende die Vorstellung einiger erfolgreicher „Hilfe“ Techniken zur Ideenfindung:

8.0.0.0. Brainstorming

Das Brainstorming ist eine der beliebtesten Kreativitätstechniken. Es ist geeignet für Gruppen zwischen vier und acht Teilnehmern. Obwohl mehrere Studien die Effektivität dieser Methode kritisieren, wird dieser Klassiker dennoch in zahlreichen Unternehmen eingesetzt.

Was kann Brainstorming?

Durch die Technik des Brainstormings wird innerhalb kurzer Zeit eine Vielzahl von Ideen produziert. Sie führt sowohl zu zahlreichen Denkanstößen als auch zu sehr originellen Lösungen, die sich effektiv weiterverarbeiten lassen. Dies trifft insbesondere dann zu, wenn sie noch am Anfang stehen und noch sehr viele Ideen benötigen, um eine konkrete Fragestellung zu beantworten. Das Brainstorming ist insbesondere für jene Bereiche geeignet, in denen die Art der Lösungsvorschläge eine breite Streuung zeigen soll. Beispiele hierfür sind Bereiche, die die Gruppe selbst betreffen, wie bei der Frage: „Wie kann ich effektiver arbeiten? Auch wenn Experten aus unterschiedlichen Bereichen zusammenarbeiten müssen, ist das Brainstorming die Methode der Wahl.

Weniger geeignet ist das Brainstorming, um komplexe Probleme zu lösen oder wenn ein bestimmtes Spezialwissen erforderlich ist, welches die Gruppe nicht besitzt. Diese Technik funktioniert nur dann effektiv, wenn alle Teilnehmer in der Gruppe gleichrangig sind. Um eine Brainstorming Sitzung durchzuführen benötigen sie eine Gruppe mit 4 bis 8, maximal 15 Teilnehmern. Weiterhin bedarf es eines Moderators, der die Vorschläge auf einem Flipchart, einer Tafel oder Moderationswand aufzeichnet bzw. protokolliert. Eine solche Sitzung dauert ca. 15 bis 20 Minuten in der Ideenfindungsphase und 30 bis 40 Minuten in der Bewertungsphase.

Brainstorming zeichnet sich durch seine ungemein hohe Flexibilität aus, welche in fast allen Bereichen Anwendung findet, in denen kreativ gedacht werden soll.

Ein Moderator präsentiert das Thema und erläutert die Regeln, sofern sie den Teilnehmern noch nicht bekannt sind. Die Einhaltung der Regeln wird vom Moderator überwacht. Die Teilnehmer sollen spontan Vorschläge äußern, welche vom Moderator dokumentiert werden.

Die vier Grundregeln:

Solange nicht alle Vorschläge geäußert wurden, darf nicht beurteilt werden. Jede Kritik ist untersagt.

Jeder Vorschlag ist willkommen, und sei er auch noch so ungewöhnlich. Der Grund ist: es ist leichter, ungewöhnliche Ideen durch die anschließende Bewertungsphase abzuschwächen, als sie zu entwickeln.

Die Quantität geht vor Qualität, das heißt es sollen so viele Vorschläge wie möglich entwickelt werden.

Es ist gestattet die Ideen anderer aufzugreifen, sie weiterzuentwickeln oder neu zu kombinieren.

Ideen Sturm in zwei Wellen

Es ist ein interessantes Phänomens, das nach fünf bis zehn Minuten den Teilnehmern die Ideen ausgehen. Sie sollten jedoch die Sitzung auf keinen Fall abbrechen, auch wenn es so aussieht, als wenn keinem mehr etwas einfiele. Wenn sie weitermachen, werden sie feststellen, daß den meisten Teilnehmern nach kurzer Zeit weitere Vorschläge einfallen; zwar nicht mehr so viele, aber häufig wesentlich originellere. Es lohnt sich in jedem Fall die zweite Welle der Ideen abzuwarten. Es kommt bei manchen Gruppen vor, daß sie auch noch eine dritte Welle der Ideenproduktion erfolgreich abschließen.

Bewertung

Nach der Ideenproduktion folgt die Bewertungsphase. Nach der Phase der Ideenproduktion haben sich alle Teilnehmer der Gruppe eine Pause verdient. Oftmals ist es sinnvoll mit der Bewertungsphase erst am darauf folgenden Tag zu beginnen. Die Teilnehmer müssen für die Bewertung von der flexiblen Kreativität zur Objektivität wechseln. an dieser Stelle ist die zuvor verbotene sachliche Kritik durchaus erwünscht, und so manche ungewöhnliche Idee muß eine Prüfung auf Brauchbarkeit über sich ergehen lassen.

Von den Teilnehmern werden alle Vorschläge bewertet. Die Kriterien sind Praktikabilität und Gefühlsmäßiger Anspruch. Es sollte eine Rangfolge der Ideen festgelegt werden, in der sie bearbeitet werden. Oder sie wählen nur einzelne Ideen aus, die weiter ausgearbeitet werden. Die restlichen Ideen können anhand der Osborn-Checkliste (kommt später) weiterbearbeitet werden.

Welche Rolle hat der Moderator?

Das Gelingen des Brainstormings hängt entscheidend von der guten Moderation ab. Es ist dem Moderator nicht erlaubt sich einzumischen oder gar in den Vordergrund zu spielen und auf keinen Fall dürfen Vorschläge von ihm gemacht werden. Seine Aufgaben sind die folgenden: Er soll:

für eine vertrauensvolle Atmosphäre sorgen

alle Teilnehmer ermutigen, mitzumachen.

auf die Einhaltung der Regeln achten und verhindern, daß in der Phase der Ideenfindung schon Bewertungen vorgenommen werden

alle Vorschläge dokumentieren, ohne selbst zu kommentieren oder sie abzuändern.

die Bewertung leiten, ohne selbst Stellung zu nehmen.

die Sachlichkeit der Bewertung gewährleisten.
Wie sollte die Gruppe zusammengesetzt sein?

Am günstigsten sind die Voraussetzungen, wenn es sich um ein eingespieltes Team in der Gruppe handelt. Sehr hinderlich ist, wenn es innerhalb der Gruppe zu einem ausgeprägten Konkurrenzneid oder zu Statuskämpfen kommt. Es ist weiterhin umstritten, ob es sinnvoll ist ein Brainstorming mit zufällig zusammengestellten Teilnehmern durchzuführen. Manche halten die doch genau dies für die besten Voraussetzungen dafür viele Anregungen aus unterschiedlichen Blickwinkeln zu bekommen.

Ist Brainstorming ein kreatives Allheilmittel?

Die Hochzeit des Brainstormings waren die sechziger und siebziger Jahre. In der Zwischenzeit jedoch, haben mehrere Studien Zweifel an der Wirksamkeit dieser Methode aufgebracht. In diesen Studien wird in Frage gestellt, ob Brainstorming zwangsläufig zu mehr und besseren Ergebnissen führt, als wenn jeder Teilnehmer separat nach einer Lösung sucht. Man ist sich heute einig, daß Brainstorming eine der wichtigsten Kreativitätstechniken ist, die auch von ihren Kritikern als eine höchst effiziente Technik zur Stimulierung des kreativen Denkens dargestellt wird. Es läßt sich anhand vieler Beispiele belegen, daß sie zu brauchbaren Ergebnissen führt.

Es gibt einige Varianten des Brainstormings. Ein populäres Beispiel ist das Destruktiv-Konstruktiv- Brainstorming. Hierbei ist die Phase der Ideenfindung zweigeteilt: negative Ideen, die eine Lösung verhindern können, sollen zunächst gesammelt werden. In der anschließenden Phase dürfen die Teilnehmer konstruktive Vorschläge äußern. Auf diese Weise sind reichere und originellere Ideen zu erwarten.
Im Kontrast zum Gruppen Brainstorming gibt es noch das Einzel Brainstorming. In diesem Fall sind Ihr eigener Moderator, durchlaufen wie bereits beschrieben ein Ideenfindungsphase, in der sie in jedem Fall noch keine Bewertung vornehmen sollten, und werden diese Ideen hinterher kritisch bewerten. Bei diesem Verfahren müssen sie sehr diszipliniert sein, was sich jedoch mit ein wenig Übung bewerkstelligen läßt. Auch hier ist es anzuraten, nicht gleich nach der

Ideenfindungsphase mit der Bewertungsphase fortzusetzen, sondern vielleicht ein oder zwei Tage verstreichen zu lassen.

8.0.0.1. Brainwriting

Das Brainwriting funktioniert ganz ähnlich wie das Brainstorming, der Hauptunterschied ist der, daß alle Einfälle schriftlich festgehalten werden. Man unterscheidet zwischen zwei sehr unterschiedlichen Varianten:

Die bekanntere, die Methode 635, welche auf die Kreativität fördernde Wirkung von akutem Streß setzt. Diese Methode produziert wesentlich mehr Ideen als beim Brainstorming, die zudem noch durch die Originalität spontaner Antworten geprägt sind.

Die Collective-Notebook-Methode, welche langwieriger aber auch wesentlich gründlicher, sowie zeitlich und räumlich flexibler ist.

Was kann Brainwriting leisten?
Neben den Vorteil, daß beim Brainwriting wesentlich mehr Ideen produziert werden als beim Brainstorming, gesellen sich noch weitere, z.B.:

daß gruppendynamische Prozesse kaum eine Rolle spielen

die Zahl der Teilnehmer theoretisch unbegrenzt ist

kein Moderator benötigt wird, der manchmal Kreativität eher verhindert, als sie zu fördern.

Brainwriting ist besonders geeignet, wenn:

einfache und klar strukturierten Frage vorliegen (Methode 635), aber auch komplexere Probleme (collective Notebook)

Teilnehmer schwer verfügbar sind (collektive Notebook) es in der Gruppe Kommunikation Probleme gibt oder aber keinen Moderator zur Verfügung steht

Brainwriting ist dagegen weniger geeignet:

Zur Lösung komplexer Fragen

Wenn starke Unterschiede im Erfahrungs- und Wissenshorizont der einzelnen Teilnehmer bestehen

Wenn die Zahl Lösungen a priori stark eingeschränkt ist.

Was wird für ein Brainwriting benötigt?

Eine Gruppe, die im Idealfall aus sechs Teilnehmern besteht, die Teilnehmeranzahl kann jedoch auch variabel sein.

Schreibwerkzeug und Papier (im Idealfall dafür vorbereitete Vordrucke) oder ein vernetztes Computersystem.

Wie ist Ablauf beim Brainwriting?

Ein Blatt, auf dem die Fragestellung vorformuliert ist, wird jedem Teilnehmer ausgehändigt. In den nächsten fünf Minuten sollen drei Lösungsvorschläge auf dem Blatt notiert werden. Danach reicht der Teilnehmer das Blatt an seinen Nachbarn weiter. Im Gegenzug bekommt er dessen Blatt. Auf dieses Blatt soll er in den folgenden fünf Minuten drei neue Ideen hinzufügen, wobei er sich idealerweise von den bereits bestehenden Vorschlägen inspirieren läßt. Danach wird auch dieses Blatt wieder weitergegeben.

Wenn jeder Teilnehmer jedes Blatt gehabt hat ist die Sitzung beendet. Bei sechs Teilnehmern sollte also nach einer guten halben Stunde ein Pool von 108 Lösungsvorschlägen bereitliegen. Die Auswertung verläuft wie beim Brainstorming. Auch diese Methode läßt sich nach der bereits beschrieben Collective-Notebook-Methode durchführen. Hierbei erhält jeder Teilnehmer ein Notizbuch mit der Problemstellung. Innerhalb einer bestimmten Frist soll er das Problem analysieren und die Vorschläge darin notieren.

Man sollte sich vor Augen halten, daß diese Methode die Teilnehmer sehr unter Druck setzt. Sie müssen innerhalb kürzester Zeit eine Vielzahl von Ideen produzieren, was nicht selten ein Grund für eine Denkblockade ist. Der Vorteil dieses Stresses ist allerdings auch, daß die Teilnehmer gezwungen sind, sich zu konzentrieren und sich nicht in der Gruppe verstecken können. Im Vergleich zum Brainstorming kommen auf diese Weise nicht nur wesentlich mehr Ideen zustande, sondern der gesamte Ablauf führt dazu, daß die Teilnehmer gedanklich neue Wege-einschlagen müssen.

Der Effekt ist, daß erstaunlich viele Entdeckungen zu machen sind. Es wird von vielen als angenehmer Nebeneffekt empfunden, wie kreativ und produktiv sie eigentlich sein können.

8.0.0.2. Mind Mapping

Diese Technik ist sehr schnell zu lernen, universell und fast überall einsetzbar, und es ist sehr wahrscheinlich, daß immer etwas dabei herauskommt. Diese Technik wurde von Tony Buzan entwickelt und erfreut sich außerordentlicher Beliebtheit. Um ein Mind Mapping durchzuführen bedarf es nicht viele Werkzeuge, es schafft Übersicht und bringt sie mit einfachen Mitteln auf neue Ideen.

Was leistet Mind Mapping?

Mit den Mind Mapping wird unser bildlich-räumliches Denken stimuliert und eine neue Sichtweise wird ermöglicht. Dadurch, daß wir unser Thema oder unser Problem im wörtlichen Sinne verbildlichen, können wir es neu strukturieren.
Wesentliche Punkte können herausgearbeitet werden, es können leicht neue Verbindungen hergestellt werden und Nebenaspekte miteinbezogen werden. Die offene Struktur der Mind-Maps hat den Vorteil, daß sie später ergänzt werden können.

Für folgende Bereiche ist das Mind Mapping besonders geeignet:

Problemanalyse

Überblick über komplexe Themen

Vorbereitung von Vorträgen und Aufsätzen

Planung und Strategie

Das Mind Mapping hat allerdings auch seine Schwächen:

Durch einen Mind-Map entsteht leicht der Eindruck, ein Problem zu überblicken, selbst wenn dies nicht der Fall ist.

Die entstandenen Bilder können suggestiv wirken und Ihr Denken in die falsche Richtung lenken

Komplexe Sachverhalte werden stark verkürzt dargestellt

Was benötigt man für einen Mind Mapping?

Ein mindestens DIN-A$_4$ großes Blatt Papier

Schreibwerkzeug, möglichst in verschiedenen Farben

Zeitbedarf: 20 bis 30 Minuten

Neben dem strategischen Vorteil die das Erstellen eines Mind-Maps hat, funktioniert es auch sehr gut als Erinnerung Stütze und versetzt Sie in der Lage auch später noch ein Thema wieder aufzugreifen und schnell die Orientierung zu finden.

Wie er stellt man einen Mind-Map?

Man beginnt in der Mitte des Blattes. Dort sollte der zentrale Begriff, um den es geht, stehen. Es steht ihnen frei diesen zentralen Begriff auch bildlich darzustellen. Von diesem zentralen Bild oder Begriff beginnt man nun mehrere Linien abzweigen zulassen. Auf jede diese Linien wird ein Begriff geschrieben, den man aus dem vorgegebenen Thema ableiten kann. Dabei sollte man nicht zu lang überlegen, sondern einfach, was einem in den Sinn kommt, niederschreiben. Nehmen wir als Beispiel das Thema Effektivität. Hier lassen sich Begriffe ableiten wie etwa:

Zeit sparen

Schnelligkeit

Ökonomie

Gewinnbringend

Hilfsmittel.

Von diesen Begriffen ausgehend fallen einem wieder Andere ein, die auf neue Linien beschrieben werden. Nach und nach werden Zusammenhänge erkennbar, die es ermöglichen, auch abseitige Aspekte zu betrachten. Zunehmend füllt sich ihr Blatt. Sobald man das Gefühl hat, man hat das Wichtigste notiert, ist das Mind-Map vorläufig fertig. Ein Beispiel für ein Mind-Map ist auf der nebenstehenden Abbildung dargestellt.

Tony Buzan, der Erfinder des Mind-Maps hat sieben Grundregeln formuliert, nach denen ein Mind-Map zu gestalten ist:

Beginnen sie mit einem farbigen Bild in der Mitte.
Schreiben Sie alle Wörter in Großbuchstaben, das fördert die Übersichtlichkeit.

Die Wörter sollen auf Linien stehen, wobei jede Linie mit anderen Linien verbunden ist

Verwenden Sie nach Möglichkeit nur ein Stichwort pro Linie

Benutzen sie möglichst viele Farben

Ignorieren sie kontrolliertes denken und halten Sie möglichst alles fest, was ihnen im Zusammenhang mit der Zentralidee in den Sinn kommt.

Beispiel:

Um Mind-Maps noch übersichtlicher zu gestalten, steht es Ihnen frei individuelle Symbole zu verwenden. Sie verwenden diese Symbole einheitlich, um beispielsweise Fragen, Ziele oder Wünsche gegeneinander abzugrenzen.

Wie kann man Mind-Maps effektiv nutzen?

Wenn sie gerade damit anfangen sich mit einem Thema zu beschäftigen, ist es sehr sinnvoll ein Mind-Map zu erstellen.

Schreiben Sie alles auf, was ihnen einfällt, und sie werden sich wundern, wieviel sie bereits über dieses Thema wissen, selbst wenn sie geglaubt haben noch gar nichts zu wissen. Wenn sie beginnen ein Mind-Maps in die Praxis umzusetzen, so sollten sie das Mind-Map kontinuierlich ergänzen, um es den gegenwärtigen Umständen anzupassen. Irgendwann kann es natürlich passieren, daß ein Mind-Map unübersichtlich wird. Dies ist der beste Zeitpunkt ein neues anzufangen.

Sobald dann meint man fertig ist, sollten sie es sich sehr genau anschauen und vielleicht mit jemand anderem darüber reden. Möglicherweise ergeben sich neue Zusammenhänge, die sie dazu verleiten neue Prioritäten zu setzen. Seien Sie jedoch vorsichtig, obwohl ein Mind-Map fast immer sehr strukturiert aussieht, muß das nicht bedeuten, daß damit das Problem auch strukturiert gelöst ist. Machen Sie sich die Grenzen dieser Technik genau bewußt. Nur dann können sie Mind Mapping wirklich effektiv und zielführend einsetzen.

Die Individualität der Mind-Maps macht es schwierig die, von fremden Personen Erstellten zu verstehen. Sie sollten sich diese, so Sie daran interessiert sind, genau erklären lassen. Nur so lassen sich Mißverständnisse der individuellen Schreibweise verhindern.

Es gibt eine Variante des Mind Mapping die bei komplexen Problemen zielführend ist.

Sie notieren die einzelnen Schlüsselbegriffe und Ideen nicht direkt in das Mind-Map, sondern zunächst auf Kartei Karten oder Haft Notizen. Diese können dann leicht auf dem zu erstellenden Mind-Map verschoben, weggenommen oder neu kombiniert werden. Obwohl mit dieser Technik die Gestaltungsmöglichkeiten nicht so groß sind, sind sie doch wesentlich flexibler. Sind sie mit ihrem Ergebnis zufrieden, sollten Sie daraus möglichst bald ein „echtes Mind-Map“ herstellen, ansonsten ist das Ergebnis äußerst flüchtig.

8.0.0.3. Bisoziation oder Benchmarking

Bei der Frage „Woher kreative Leistungen kommen stößt man relativ schnell auf das Prinzip der Bisoziation. Bei dieser Technik wird in zwei, vorher unverbundenen Denkdimensionen gedacht. Ein sehr schönes Beispiel ist Johannes Gutenberg. Als er die Merkmale der Weinpresse mit denen des Münzprägestempels verband, erfand er die Druckpresse mit beweglichen Lettern.

Was leistet die Bisoziation?

Hier handelt sich um eine sehr vielseitige Technik. Ihre Effektivität hängt sehr stark von der Wahl der beiden Denkdimensionen ab. Das Prinzip der Bisoziation liegt auch anderen Kreativitätstechniken zugrunde, die später noch beschrieben werden. Bei diesen wird Ihnen die Wahl der zweiten Denkdimension jedoch abgenommen. Für die folgenden Bereiche ist die Technik der Bisoziation besonders geeignet:

Technische Probleme und Erfindungen

Im künstlerischen Bereich

Gut strukturiertes Fragen und Probleme

Die Technik hat aber auch ihre Schwächen:

Es ist besser vorher zu wissen, wo sie suchen müssen

Sie kann sehr langwierig sein

Brauchbarer Analogien sind relativ selten, prüfen Sie daher jeder Einzelne sorgfältig.
l
Die folgenden Dinge benötigen Sie für die Technik der Bisoziation:

Beobachtungsgabe

Fantasie

Zeit

Neugier

Glück

Fachliche Kompetenz

Strukturelle Intelligenz

Je nach Fragestellung, benötigen sie von diesen Dingen mehr oder weniger.

Dauer: diese Technik kann sehr zeitaufwendig sein, daher empfiehlt sich eine zeitliche Begrenzung für diese Gruppen Sitzung anzusetzen (zwei bis vier Stunden). Die Technik der Bisoziation ist eine äußerst flexible Denktechnik, die sich auf viele Fragestellungen anwenden läßt.

Bei der Lösungssuche werden vier Phasen durchlaufen:

Problemdefinition

Auffinden der zweiten Denkdimension

Erkennen von Analogien

Transfer der Lösung

Das Problem definieren

Das Problem sollte zu Beginn klipp und klar definiert werden. Beispiel: Sie möchten ein Werkzeug konstruieren, daß sehr vielseitig ist und trotzdem in jede Hosentasche paßt. Sie sollten sich fragen: „worum geht es hier eigentlich? Die beste Taktik ist, das Problem von möglichst vielen Seiten einzukreisen. Erstellen Sie eine Liste, welche die Anforderungen ihre Lösung erfüllen muß.

Finden sie den Einstieg in die zweite „Denk“ Dimension.

An dieser Stelle fängt die Sache an, kreative Leistung zu fordern: es ist nicht leicht die zweite Denkdimension aufzuspüren, die geeignet ist, Ihr Problem zu lösen.
Der beste Einstieg ist die Überlegung, was ist so ähnlich, was sie erreichen möchten.

Warum funktioniert etwas in einem Bereich, welches bei ihnen nicht funktioniert. Dabei ist es unerheblich, wie weit sie sich von ihrem Ausgangspunkt entfernen. Ob sie sich bei der

Entwicklung ihres Werkzeugs, welches in jede Hosentasche passen soll, von Insekten, Regenschirmen oder anderen Dingen, die es vielleicht schon gibt, Analogien erkennen.

Dies ist eine der wichtigsten Teile dieser Technik: sie sollten sehr aufmerksam sein, nach Analogien und gemeinsame Prinzipien suchen. Am besten ist es, wenn sie die Gesetzmäßigkeiten erkennen und prüfen ob sich diese in ihrem Bereich übertragen lassen.

Das heißt nicht, daß sie in diesem fremden Bereich zum Experten werden müssen. Dies wäre unter Umständen sogar nachteilig. Das heißt, daß ein Flugzeugkonstrukteur, der die Flügel eines Vogels untersucht, nicht zum Vogelkundler werden muß. Aber oftmals ist es hilfreich einen solchen Experten zu befragen.
Bei der Suche nach Analogien sollten sie auch nahe liegende Bereiche berücksichtigen. Denn nicht immer ist die Entfernteste auch die beste Lösung: wenn Sie ein Werkzeug entwerfen wollen müssen Sie also nicht unbedingt ein Vorbild in der Natur suchen, manchmal reicht es auch aus ein wenig bei anderen Herstellern zu spionieren. Dies klingt natürlich sehr naheliegend und wenig kreativ, doch in vielen Fällen kommen so nicht nur gute, sondern auch äußerst kreative Ideen zustande. Damit sind wir noch nicht am Ende angekommen, denn der entscheidende Schritt steht ihnen noch bevor: sie müssen die Lösung auf ihren Bereich übertragen.

Der Transfer

Eine gute Idee aus anderen Bereichen einfach zu übernehmen klingt vielleicht einfach, ist jedoch nicht ausreichend. Sie muß in dem neuen Bereich, den sie anstreben, auch funktionieren. Das heißt, es müssen in der Regel noch einige Dinge verändert werden. Wie Sie sich sicher vorstellen können, fliegt ein Flugzeug eben nicht genauso wie ein Vogel, weshalb zwei Elemente des Flügels übernommen werden können, andere jedoch möglicherweise abgeändert werden müssen. Dann heißt es, daß sie die Idee ihrer Routine anpassen müssen. Denn erst dann zeigt sich, ob sie wirklich brauchbar, und damit kreativ ist.

Die oben vorgestellte Strategie erinnert uns berechtigterweise an den Forschungsbereich der Bionik. In einem Bereich werden viele Erfinder und Konstruktor fündig: der Natur. Sie kennen sicher die geniale Erfindung des Klettverschluß, welche sich von ihrem Vorbild den eher lästigen Kletten ableitet. Die Hautoberfläche von Delphinen und Haien inspirierte Konstrukteure, die Fortbewegung von U-Boten zu optimieren. Die Übertragung von Vorbildern aus der Natur in den Bereich der Technik heißt Bionik und gilt als außerordentlich leistungsfähige Methode.

Hierbei handelt sich um einen Klassiker der Kreativitätstechniken, der Anfang der sechziger Jahre von dem Amerikaner William Gordon entwickelt wurde. Es handelt sich hier um eine recht anspruchsvolle Verfremdungsmethode, die auch von zahlreichen namhaften Unternehmen eingesetzt wird. In abgewandelter Form läßt sie sich auch von Einzelpersonen nutzen. Im Prinzip arbeitet die Synektik ähnlich wie die Bisoziation. Jedoch weicht sie in einem entscheidenden Punkt wesentlich ab: Sie suchen sich nicht irgendeinen selbst gewählten fremden Bereich, in dem sie nach Anregungen für ihre Lösung forschen, sondern sie entfernen sich über drei bis vier Verfremdungsschritte immer weiter von ihrem Problem.

Was leistet Synektik?

Dadurch, daß sie ihren Problemkreis gedanklichen weit verlassen, ermöglicht diese Technik, daß Sie unvoreingenommen und ohne Scheu oder Betriebsblindheit an ihr Problem heran gehen und es lösen.

Die Synektik ist für folgende Bereiche besonders geeignet:

Ausgesprochen schwierige Probleme

Neue Entwicklungen oder Produkte

Versierte Problemlöser als Teilnehmer

Auch die Synektik hat ihre Schwächen, denn sie ist für Anfänger grundsätzlich ungeeignet.

Die folgenden Dinge benötigen Sie für eine Synektik Sitzung:

Vier bis acht Teilnehmer

Einen Moderator

Einen Protokollanten (das kann auch vom Moderator übernommen werden)

Eine Tafel, Flipchart- oder Moderationswand zum Aufzeichnen der Vorschläge

Dauer: 4 bis 8 Stunden

Diese Technik ist nicht nur außerordentlich aufwendig, sie ist auch sehr anspruchsvoll und fordert viel von Teilnehmern und Moderator.

Ablauf einer Synektik Sitzung

1. Das Problem wird formuliert

Diese Phase dauert ungefähr 15 bis 30 Minuten. Zu Beginn informiert der Moderator die Teilnehmer über den zeitlichen Ablauf der Sitzung und erklärt das Problem. Zu diesem Zeitpunkt können auch noch Verständnisfragen geklärt werden. Alle notwendigen Informationen müssen zu diesem Zeitpunkt verstanden sein. Sollte einer der Teilnehmer ergänzende Information und bereit haben, so sollte er sie der Gruppe nicht vorenthalten.

2. Brainstorming

Dauer dieser Phase ist 10 Minuten. In einem kurzen Brainstorming werden spontane Lösungsvorschläge gesammelt. Dies hat den Vorteil, daß die Teilnehmer unbelastet in den eigentlichen

Synektik Prozeß eintreten können. Die Ideen werden formuliert und z.B. auf den Flipchart notiert, zu diesem Zeitpunkt jedoch noch nicht ausgewertet.

3. Formulieren sie das Problem neu

Dauer: 5 bis 10 Minuten. Meistens ergeben sich durch das Brainstorming neue Aspekte. Dann kann es sinnvoll sein das Problem, um zu formulieren mit dem Hintergrund, daß alle Teilnehmer von der gleichen Fragestellung ausgehen. Ob das nötig ist wird vom Moderator entschieden.

4. Bilden sie eine so genannte direkte Analogie

Dauer dieser Phase:20 Minuten.

Nach den Regeln der Bisoziation wird versucht eine Entsprechung des Problems aus einem anderen Bereich zu finden. Dieser Bereich wird in der Regel vom Moderator vorgegeben und ist in den meisten Fällen aus dem Bereich der Natur. Auch hier ist die Natur wieder so beliebt, weil fast jedes Problem auf dieses Gebiet projiziert werden kann. Nun werden die Antworten gesammelt und am Ende wählt die Gruppe eine Antwort aus.

5. Bilden sie eine persönliche Analogie

Dauer:20 Minuten.

Die Antwort aus der letzten Phase bildet den Ausgangspunkt für ihre persönliche Analogie. Jeder Teilnehmer versucht sich in den Gegenstand hinein zu versetzen und stellt sich die Frage " Wie fühle ich mich/verhalte ich mich als...?" Auch hier wird von der Gruppe ein Vorschlag ausgewählt.

6. Finden Sie eine symbolische Analogie

Dauer:10 Minuten.

Wieder wird ausgehend vom Vorschlag aus dem Vorhergehenden Schritt von den Teilnehmern nach ungewöhnlichen Vergleichen gesucht. Hier jedoch kommen die Vergleiche aus dem Bereich der Formen, Bilder oder Klänge. Es geht hierbei um die Verdichtung des Gefühls. Dabei können auch recht widersprüchliche Vergleiche und Paradoxa wie "Strahlende Dunkelheit" gebildet werden. Am Ende entscheidet wieder die Gruppe mit welcher Lösung weiter gearbeitet wird.

7. Bilden sie eine zweite direkte Analogie

Dauer:20 Minuten.

Hier sollte die Lösung denkbar weit von der Ursprungsfrage entfernt sein. Es soll noch einmal auf einen bestimmten Bereich projiziert werden. Wurde im Schritt vier der Bereich Natur ausgewählt, so ist es nun häufig der Bereich Technik, der zum Einsatz kommt. Alle stellen sich auch hier wieder die Teilnehmer eine Frage: " auf welche technischen Geräte oder Verfahren könnte die Antwort des vorhergehenden Schrittes zutreffen?" Hier können ebenfalls eine bis drei Lösungen ausgewählt werden.

8. Analysieren Sie die Analogien

Dauer dieser Phase:20 Minuten.

Ziel ist es eine Liste der Merkmale und Funktionsprinzipien der ausgewählten Analogien aufzuzeichnen. Was zeichnet die gefundenen Geräte oder Verfahren aus?

9. Force fit

Dauer:30 Minuten.
Dies ist die entscheidende Phase: die zuvor aufgestellte Merkmalsliste wird nun auf die Ausgangsfrage zurückbezogen. Welche Bedeutung haben die Merkmale dieser Liste in Hinsicht auf unser Problem?

Wurde zuvor in vier Schritten ein großer Abstand zur Ausgangsfrage erzielt, so müssen nun die Teilnehmer nun mit einem Riesensatz zurückspringen und brauchbare Ideen finden. Wichtig ist jedoch, daß sie sich auf eine Lösung einigen müssen, wie auch immer diese aussieht, denn dieser Schritt heißt nicht ohne Grund „force fit oder übersetzt: "erzwungene Einigung". Die Methode der Synektik ist nicht ganz unproblematisch, denn der Zwang zu kreativen Ideen kann eine sog. kreative Denkfalle öffnen, mit dem Ergebnis, daß die Teilnehmer die abwegigsten Ideen produzieren, die sich nie in die Praxis umsetzen lassen. Aus diesem Grund ist das „Force Fit ein unbedingter Bestandteil dieser Methode, die er sowohl von den Teilnehmern als auch vom Moderator ein
Höchstmaß an Fantasie und Konzentration abverlangt. Es empfiehlt sich daher vor diesem Schritt eine Pause einzulegen.

10. Formulieren sie Lösungsansätze

Dauer:20 Minuten.

Ausgehend von den Ideen aus der letzten Phase, formuliert die Gruppe ihre Lösungsansätze. Dabei ist weniger die Anzahl der Lösungsansätze wichtig, als daß diese auch weiter ausgearbeitet werden können. Damit ist das Ziel der synektischen Sitzung erreicht.

Es gibt Kreativitätstechniken, die darauf beruhen, daß sich der Anwender in eine Situation oder gar in einer Person oder Rolle hinein versetzt. Stellen Sie sich die Frage: " was würde ein zehnjähriges Kind dazu sagen?" Obwohl diese Techniken vielfach als unseriös angesehen werden, sind sie oft erstaunlich effektiv; flexibel und auch sehr erfolgreich. Obwohl Sie sich prinzipiell in jede Rolle hinein versetzen könnten, gibt es Technikern, die es nicht bei unverbindlichen Vorgaben belassen. Auf diese Art und Weise sind die "6 Denkhütte" von De Bono oder die " drei Denkstühle " von Walt Disney entstanden.

Was leisten solche Techniken?

Diese Techniken versetzen Sie in der Lage, ihr Problem aus unterschiedlichen Perspektiven zu durchdenken. Dabei werden alle Aspekte erfaßt, und zwar wesentlich effizienter, als wenn sie " direkt " darüber nachdenken. Sie können wesentlich spielerischer und „rücksichtsloser vorgehen, wenn sie sich in bestimmte Rollen oder Standpunkte projizieren. Dies erweitert ihren Ideenradius erheblich.

Die Stärken dieser Techniken:

Ermöglicht eine Distanz zu ihrem Problem

Betrachtet das Problem aus mehreren Perspektiven

Kann bei Gruppensitzungen Spannungen lösten
Aber auch hier gibt es Schwächen:

Die Technik bleibt verhältnismäßig nah an ihrem gewohnten Denken; wenn sie kreativer sein möchten, sollten Sie auf andere Techniken zurückgreifen. Die Technik wirkt zunächst etwas unnatürlich; ihre Wirksamkeit entfaltet sich erst nach einiger Übung Im Folgenden werden diese Techniken am Beispiel von Disney´s Denkstühlen erklärt. Von Walt Disney wird berichtet, daß es sich bei seiner kreativen Arbeit nacheinander in verschiedenen Rollen versetzt hat:

Die des Träumers

Des Realisten

Des Kritikers

Disney habe diese Rollen zuvor ist so gut wie möglich getrennt. Dies tat er daher durch, daß er beim Wechsel der Rolle auch seinen Platz in seiner Firma wechselte. So soll er zunächst drei unterschiedliche Denkstühle gehabt haben, später sogar drei unterschiedliche Räume für seine unterschiedlichen Denkhaltungen.

So setzen Sie diese Strategie für sich ein:

Sie nehmen nacheinander verschiedene Denkhaltungen ein

Diese Denkhaltungen verknüpfen sie mit bestimmten Ort zum „Verankern“.

Es ist ganz normal, daß sie zu Beginn etwas Mühe haben werden, sich in die entsprechende Denkhaltung hinein zu finden. Dies wird durch die Verbindung mit einem festen Platz erleichtert.
Der Stuhl des Träumers

Auf diesem Stuhl produzieren sie die fantastischsten Einfälle und spielen mit verschiedenen Möglichkeiten und auch Unmöglichkeiten. Sie dürfen fast alles, nur eines sollten sie tunlichst unterlassen: ernsthaft über das Problem nachzudenken. Spinnen sie ihre Ideen und Vorstellungen und bringen sie sie zu Papier.

Der Stuhl des Kritikers

Unterziehen sie ihre Ideen einer schonungslosen Kritik. Sie sollten prüfen, was sich umsetzen läßt und was nicht. Sie sollten sich die Frage stellen, ob sich die Sache lohnt und ob sie sie überhaupt wollen. Was überflüssig ist, sollte jetzt gestrichen werden.

Der Stuhl des Realisten

An diesem Platz kommen sie wieder zur " Normalität " zurück. Sie versuchen die verrückten Ideen des Träumers weiterzuentwickeln, greifen Anregungen auf und suchen schon jetzt nach neuen Lösungen. Weiterhin wählen Sie den kürzesten und zweckmäßigsten Weg aus. Dabei sollten sie sehr pragmatisch vorgehen.

Der Wechsel der Stühle

Sie sollten nicht zu lange auf einer bestimmten Stufe verweilen. Auch während der Fragestellung können sie mehrmals die Stühle wechseln. Wenn sie das Projektabschließen wollen, sollten sie im Idealfall auf dem Stuhl des Realisten sitzen.

Alex Osborn, der Erfinder des Brainstorming, hat noch weitere Kreativtechniken entwickelt. Die Bekannteste ist die nach ihm benannte Checkliste, mit der Sie aus bereits existierenden Ideen neue Lösungen kreieren können.

Was leistet die Osborn- Checkliste?

Sollte die Lösung für ein vorhandenes Problem nur konventioneller oder unbefriedigender Natur sein, so können Sie anhand der Checkliste überprüfen, wo etwas verändert werden kann, um eine kreativere Lösungen zu finden.

Die Osborn- Checkliste ist besonders geeignet:

Bei bereits vorliegenden Ideen oder Produkten

Die Nachbearbeitung einer Brainstorming Sitzung

Zum Auffinden origineller Produktideen

Diese Technik ist weniger geeignet:

Wenn man erst am Anfang ganz Projektes steht
Texte und Verfahren

Wenn Originalität nicht gefragt ist

Es was benötigen sie, um diese Technik durchzuführen?

Eine existierende Idee oder ein Produkt, welches sie verbessern möchten

Die hier vorliegende Checkliste

Dauer: etwa eine Stunde; Unterbrechungen sind möglich.

Mit der Osborn Checkliste lassen sich schwache Ideen oder Produkte mit Kreativität "aufpeppen".

Wie wird mit der Osborn Checkliste gearbeitet?
Für jede Idee oder jedes Produkt, welches Sie bearbeiten möchten, sollten Sie die Checkliste komplett durchgehen. Sie sollten sich genügend Zeit für jeden einzelnen Punkt einräumen und zu jedem Punkt mindestens eine Ideen notieren.

Anderes verwenden

Gibt es eine andere Möglichkeit das Produkt zu gebrauchen? Können Sie die Idee woanders einsetzen?

Anpassen

Gibt es etwas, was dieser Idee ähnelt? Existieren Parallelen? Was könnten Sie nachahmen?

Ändern

Können sie die Größe, Form, Farbe, Bewegung etc. verändern

Vergrößern

Können sie ist größer machen? Etwas hinzufügen? Die Stärke, die Höhe, den Wert, die Länge, oder den Abstand ferneren? Können Sie es duplizieren? Oder gar übertreiben, vielleicht vergröbern?

Verkleinern

Kann man es kleiner machen? Etwas wegnehmen oder tiefer machen? Geht es kürzer, dünner oder leichter? Was ist, wenn sie es heller, von einer oder gar aufspalten? Kann man es als Miniatur verwenden?

Ersetzen
Was kann an dieser Idee ausgetauscht werden? Kann der Prozeß anderes gestaltet werden? Lassen sich die Positionen, Tonlagen, oder Elemente durch andere ersetzen?

Umstellen

Können Teile oder Abschnitte ausgetauscht werden? Was ist mit der Reihenfolge, kann man Ursache und Wirkung umdrehen?

Umkehren

Kann man aus der Idee das Gegenteil machen? Wie sieht Idee spiegelverkehrt aus? Oder läßt sich die Idee gar um 180 Grad drehen?

Kombinieren

Lassen sich andere Ideen mit der bestehenden Idee verbinden oder kombinieren? Oder läßt sich die Idee in ein bestehendes größeres Ganzes einfügen, in Module oder Bausteine zerlegen?

Transformieren

Kann man die Eigenschaften der Idee verändern? Kann man die Idee ausdehnen, transparent machen, verhärten oder verflüssigen?

Manchmal hat man sich bei einem Problem festgefahren und kommt nicht mehr weiter. Dann es ist oft sehr hilfreich, wenn sie die Betrachtungsebene ändern. Das heißt in den meisten Fällen: die Frage muß grundsätzlicher formuliert werden. Mit diesen Techniken läßt sich das Problem oft überraschend einfach lösen. Die folgenden zwei Techniken greifen auf genau dieses Prinzip zurück. Diese Methoden wurden von Edward de Bono (Konzeptfächer) und von H. Geschka (progressive Abstraktion) entworfen.

Beide Techniken helfen systematisch eine Vielzahl von Lösungsmethoden zu entwickeln und dabei die beste Alternative zu finden.

Für folgende Fälle sind die Techniken besonders geeignet:

Wenn man sich an einer Frage festgefahren hat

Bei strategischen Fragen

Wenn eine bestehende Lösung verbessert werden soll

Weniger geeignet sind diese Technik für:

Den Fall, daß sie keine Lösung oder Belegung haben, von der sie ausgehen können

Wilde Ideen und kreative Sprünge
Was benötigen Sie für diese Techniken?

Wenn sie diese Techniken in Einzelarbeit durchführen benötigen sie Schreibzeug und Papier. Bei Gruppenarbeit (vier bis sechs Teilnehmer) benötigen sie einen Moderator, er auch Protokollieren kann, sowie eine Tafel oder Flipchart.

Dauer: sehr unterschiedlich und abhängig von der Aufgabenstellung; oft kommt man ganz schnell zu einer Lösung.

Die progressive Abstraktion bzw. die Konzeptfächer ermöglichen es ihnen systematisch dem Grundsätzlichen ihrer Idee auf die Spur zu kommen. Sie können, ohne die bereits geleistete Arbeit zu verwerfen, den Denkprozeß noch einmal von vorne beginnen.

Wie geht man bei der Arbeit mit dem Konzeptfächern und der progressiven Abstraktion vor? Das Prinzip ist simpel, einfach und einleuchtend: als Ausgangspunkt nehmen Sie die unzulängliche Lösung des Problems und versuchen es auf eine allgemeine Ebene zurückzuführen (= Abstraktion). Sie können sich auch fragen, welches Konzept hinter dieser Lösung steht. Im Folgenden werden die drei Schritte beschrieben, mit denen
sie zu einer besseren Lösung kommen. Diese Abfolge ist beliebig wiederholbar.

Worum geht es eigentlich? Legen Sie dies bitte fest.
Sie erschließen sich Handlungsalternativen

Sie entscheiden sich für eine Lösung
Worum geht es?

Durch Abstraktion verlagern Sie das Problem auf die nächst höhere Ebene. Hierbei sollten Sie nicht zu übertrieben vorgehen.

Welche Alternativen gibt es?

Mit welchen Möglichkeiten kann man dieses Konzept realisieren?

Für welche Lösung entscheiden Sie sich?
I
Sie prüfen die Alternativen auf ihre Brauchbarkeit und entscheiden sich für eine von ihnen. Haben sie eine passende Lösung gefunden, ist Ihr Problem gelöst. In dem Fall, daß sie nicht zufrieden sind sollten Sie auf keinen Fall aufhören. Abstrahieren sie einfach weiter! Der nächste Schritt entspricht dann wieder dem Ersten, nur arbeiten sie jetzt auf einer noch allgemeineren Ebene und können noch mehr Alternativen in Betracht ziehen. Das wiederholte abstrahieren führt zu einer fächerförmigen Struktur. Je weiter sie sich von ihrem Ausgangspunkt wegbewegen, also stärker abstrahieren, um so mehr Optionen ergeben sich auf der unteren Ebene. Allerdings müssen diese Optionen zunächst aus den übergeordneten Konzepten abgeleitet werden.

IX.) Teil Venture Capital

Hier können sie Venture Capital für die Fertigstellung, Fertigentwicklung Ihrer Idee, Ihres Patents, bekommen.

Generell Sind Sie vorsichtig, Goldfische sind selten, Haie sind die Regel.

Auflistung von einigen Venture Capital Firmen

Chrysalix
http://www.chrysalix.com/
The first and largest fund focused on opportunities within the fuel cell, hydrogen and related energy technology areas

STARTech Early Ventures
a business accelerator that provides guidance, nurturing and financial support to entrepreneurs who have a technology driven idea and a passion to succeed
http://www.startechev.com/

Khosla Ventures
Vinod Khosla believes in ethanol and is investing personal $ in alternative energy
http://www.khoslaventures.com/

Draper Fisher Jurvetson (DFJ)
another large, mainstream venture capital firm, is dedicated to the clean technology industry
http://www.dfj.com/

Nth Power
venture capital firm dedicated exclusively to high potential investments resulting from the restructuring of the global energy industry
http://www.nthpower.com/

Investor's Circle
a 160-member group made up of socially minded investors
http://www.investorscircle.net/index.php?tg=articles&topics=115

Sevin Rosen
one of the largest funds
http://www.srfunds.com

Austin Ventures
no alternative energy investments yet, but they are likely
http://www.austinventures.com

EnerTech Capital
interest encompasses the full range of energy technologies and includes opportunities that improve the incumbent energy industry as well as the development of the alternative energy and clean energy industries
http://www.enertechcapital.com/

Mohr Davidow Ventures
invests in innovative entrepreneurs with deep expertise in energy and materials, Internet services; life sciences, semiconductor and software and systems
http://www.mdv.com

Kleiner Perkins Caufield & Byers
actively investing in greentech innovations, also awards the KPCB Prize for Greentech Innovation ($100,000)
http://www.kpcb.com

New Enterprise Associates
large player
http://www.nea.com